GENERAL INFORMATION

00
SECTION

00–00 GENERAL INFORMATION

eManualpro.com
Your No. 1 online Service Manual Resource

HOW TO USE THIS MANUAL

X5U000W01

Range of Topics

- This manual contains the procedures for performing all of the required service operations. The procedures are divided into the following five basic operations.
  (1) Removal/Installation
  (2) Disassembly/Assembly
  (3) Replacement
  (4) Inspection
  (5) Adjustment
- Simple operations which can be performed easily just by looking at the vehicle such as removal/installation of parts, jacking, vehicle lift, cleaning of parts, and visual inspection, have been omitted.

Service Procedure
Inspection, adjustment

- The procedures for inspections and adjustments are divided into steps. Important points in regard to the location and contents of the procedures are explained in detail and are shown in the illustrations.

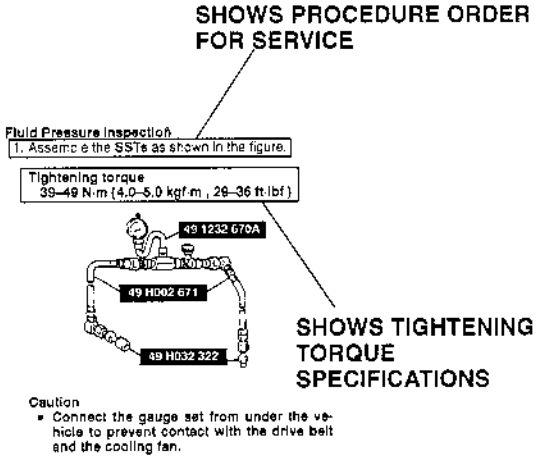

UXU00001

Repair procedure

1. Most repair operations begin with an overview illustration. It identifies the components, shows how the parts fit together, and describes visual part inspection. However, only removal/installation procedures which need to be performed methodically have written instructions.
2. Expendable parts, tightening torques, and symbols for oil, grease, and sealant are shown in the overview illustration. In addition, symbols indicating parts which require the use of special service tools are for removal/installation also shown.
3. The procedures steps are numbered and the part that is the main point of that procedure is shown in the illustration with the corresponding number. Occasionally, there are important points or information concerning a procedure. Refer to this information when servicing the related part.

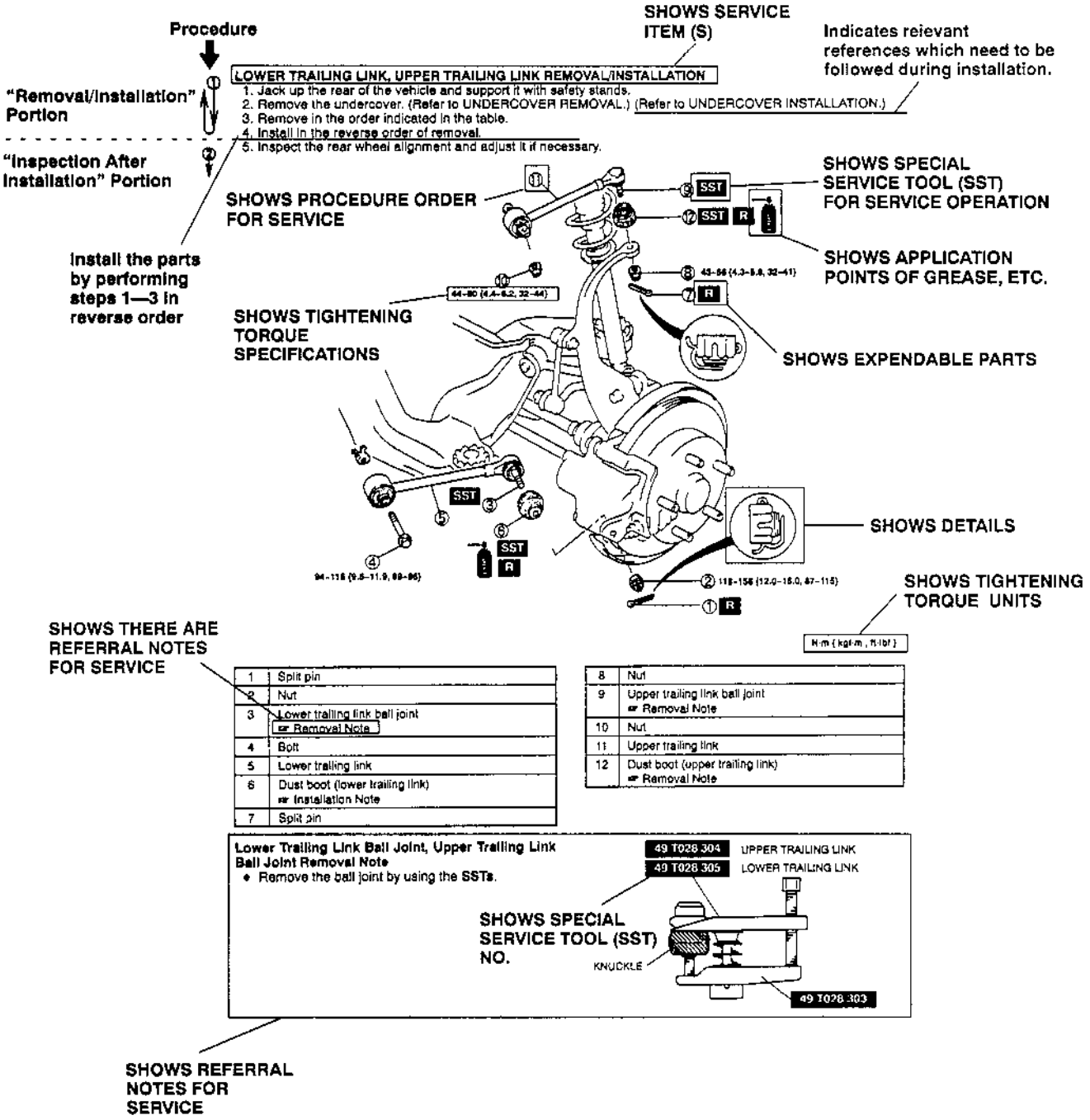

X5U000WA0

Symbols
- There are eight symbols indicating oil, grease, sealant, and the use of **SSTs**. These symbols show the points of applying or using such materials during service.

Symbol	Meaning	Kind
UXU00003	Apply oil	New appropriate engine oil or gear oil as appropriate
UXU00004	Apply brake fluid	New appropriate brake fluid
UXU00005	Apply automatic transaxle/ transmission fluid	New appropriate automatic transaxle/ transmission fluid
UXU00006	Apply grease	Appropriate grease
UXU00007	Apply sealant	Appropriate sealant
UXU00008	Apply petroleum jelly	Appropriate petroleum jelly
UXU00009	Replace part	O-ring, gasket, etc.
UXU00010	Use SST	Appropriate SST

Advisory Messages
You'll find several **Warnings**, **Cautions**, **Notes**, **Specifications** and **Upper and lower limits** in this manual.

Warning
- **A Warning indicates a situation in which serious injury or death could result if the warning is ignored.**

Caution
- **A Caution indicates a situation in which damage to the vehicle could result if the caution is ignored.**

Note
- A **Note** provides added information that will help you to complete a particular procedure.

Specification
- The values indicate the allowable range when performing inspections or adjustments.

Upper and lower limits
- The values indicate the upper and lower limits that must not be exceeded when performing inspections or adjustments.

Troubleshooting Procedure
Basic flow of troubleshooting

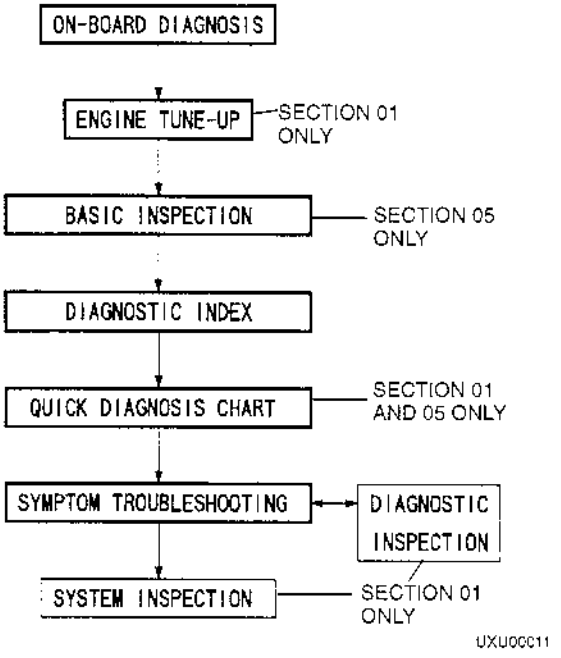

On-board diagnosis
- The Diagnostic trouble codes are important hints for repairing malfunctions that are difficult to simulate. By following the diagnostic trouble code, perform the inspection to quickly and accurately diagnose the malfunction.
- The on-board diagnostic function is used during inspection. When a diagnostic trouble code is shown, specifying the cause of a malfunction, continue the inspection according to the items indicated by the on-board diagnostic function.

Engine tune-up (section 01)
- Any necessary adjustments are made after starting the engine.

Basic inspection (section 05)
- The basic inspection is performed to quickly narrow down the possible causes after a malfunction occurs regardless of the symptoms. The basic inspection is performed to also locate the region of many malfunction symptoms.

Diagnostic index
- The diagnostic index lists the symptoms of the malfunctions. Select the symptoms pertaining to or most closely pertaining to the actual malfunction.

Quick diagnosis chart (section 01 and 05)
- The quick diagnosis chart lists the diagnosis and inspection procedures to be performed specifically relating to the cause of the malfunction.

Symptom troubleshooting
- Symptom troubleshooting quickly determines the location of the malfunction according to the type of symptoms.

Procedures for Use
Using the basic inspection
- Perform the basic inspection before the symptom troubleshooting.
- Perform each step in the order shown.
- The reference column lists the location of the detailed procedure for each basic inspection.
- Although inspection and adjustment are performed as according to the procedures referred to in the reference column, if the cause of the malfunction is discovered during the basic inspection, continue the procedures as indicated in the remarks column.

SHOWS INSPECTION ORDER

SHOWS ITEM NAMES FOR THE DETAILED PROCEDURES

SHOWS POINTS REQUIRING ATTENTION IN REGARD TO INSPECTION RESULTS

REFERENCE COLUMN

STEP	INSPECTION	ACTION	
1	Turn ignition switch to ON Does hold indicator light (illuminate/go out) correspond to hold switch position (ON/OFF)?	Yes	Go to next step
		No	Perform malfunction diagnosis according to No.26 "HOLD INDICATOR LIGHT DOES NOT ILLUMINATE WHEN HOLD SWITCH IS TURNED ON" or No.27 "HOLD INDICATOR LIGHT ILLUMINATES WHEN HOLD SWITCH IS NOT TURNED ON"
2	Check the ATF color and condition Are ATF color and odor normal?	Yes	Go to next step
		No	Repair or replace any defective parts
3	Perform the line pressure test ☞ MECHANICAL SYSTEM TEST, Line Pressure Test Is line pressure OK?	Yes	Go to next step
		No	Repair or replace any defective parts
4	Perform the stall test ☞ MECHANICAL SYSTEM TEST, Stall Test Is stall speed OK?	Yes	Go to next step
		No	Repair or replace any defective parts
5		Yes	Perform symptom troubleshooting

UXU00012

Using the diagnostic index
- The symptoms of the malfunctions are listed in the diagnostic index for system troubleshooting.
- The exact malfunction symptoms can be selected by using the details.

No.	TROUBLESHOOTING ITEM	DESCRIPTION
1	Discharged battery	—
2	Will not crank or cranks slowly	—
3	No combustion	Engine cranks at normal speed but shows no sign of firing
4	Combustion observed but engine will not start	Engine shows combustion while cranking but will not continue to run when ignition switch is turned from STA to ON
5	Cranks normal by hard to start	Engine cranks at normal speed but requires excessive cranking time before starting Engine runs normally at idle after started
6	Low idle speed/Engine stalls or vibrates	Engines idles at low speed, stalls, or vibrates when engine is cold, hot, or normal temperature
7	High idle speed Idle speed hard to high	Idle speed excessively high and will not go down after warm-up
8	High idle speed Idle speed hard to lower	Idle speed excessively high and requires time to be lowered to normal speed after warm-up
9	Rough idle/Engine stalls when E/L, P/S, or A/C ON	Engine runs normally at idle with no load but stalls or vibrates excessively when load (E/L, P/S, or A/C) is ON
10	[illegible]	Engine runs normally at idle but stalls or vibrates excessively during N–D shift
		—

UXU00013

Using the quick diagnosis chart

- The chart lists the relation between the symptoms and cause of the malfunction.
- The chart is effective in quickly narrowing down the relation between the symptoms and cause of the malfunction and specifying the region of the common cause when multiple malfunction symptoms occur.
- The appropriate diagnostic inspection relating to the cause of the malfunction as specified by the symptoms can be selected by looking down the diagnostic inspection column of the chart.

PART WHICH MAY BE THE SYMPTOM

② PARTS WHICH MAY BE THE CAUSE OF PROBLEMS

QUICK DIAGNOSIS CHART

① CHOOSE THE ACTUAL SYMPTOM

No.	Item	Intake-air system: Intake air system components: Leakage / Clogs	Intake-air system: Throttle body: Throttle valve not closed fully	Intake-air system: Throttle body: AAS passage clogged	Intake-air system: Throttle body: No accelerator free play	Intake-air system: Fuel line (Fuel pump–pressure tank): Leakage	Intake-air system: Fuel line (Fuel pump–pressure tank): Clogs	Intake-air system: Fuel line (Pressure regulator–fuel tank): Leakage	Intake-air system: Fuel line (Pressure regulator–fuel tank): Clogs	Fuel system: Fuel pump: Fuel not discharged	Fuel system: Fuel pump: Fuel not discharged (Fuel pump relay)	Fuel system: Fuel pump: Fuel not discharged (Fuel pump)	Fuel system: Relief valve always ON	Fuel system: Check valve inoperative	Fuel system: Fuel filter (High pressure side): Leakage	Fuel system: Fuel filter (High pressure side): Clogs	Fuel system: Fuel injector: Leakage	Fuel system: Fuel injector: Clogs	Fuel system: Fuel injector: Always open	Fuel system: Fuel injector: Always closed	Fuel system: Fuel injector: Injection time is short	Fuel system: Fuel injector: Injection time is long	Fuel system: Fuel injector: Injection time is long (Injection time is short)	Fuel system: Fuel injector: Injection time is long (Injection time is long)	Fuel system: Fuel injector: Injection time is long (Injection time is long) (Injection time is short)	Exhaust system: Pressure regulator inoperative: Leakage	Exhaust system: Pressure regulator inoperative: Clogs	Exhaust system: Exhaust system components: Leakage	Exhaust system: Exhaust system components: Clogs	Emission control system: Check valve: No airflow at fuel tank side	Emission control system: Check valve: No airflow at charcoal canister side	Emission control system: Charcoal canister: Leakage	Emission control system: Charcoal canister: Clogs	Emission control system: PCV valve: Always open	Emission control system: PCV valve: Always closed	Emission control system: PCV: Not activated	Emission control system: PCV: Fuel leakage	Emission control system: PCV: Fuel leakage (Fuel leakage)	Emission control system: PCV: Fuel leakage (Fuel leakage) (Fuel leakage)	Emission control system: PCV: Fuel leakage (Fuel leakage) (Fuel leakage) (Fuel leakage)	Emission control system: PCV: Fuel leakage (Fuel leakage) (Fuel leakage) (Fuel leakage) (Fuel leakage)	Emission control system: Mass air flow sensor: No signal output	Emission control system: Mass air flow sensor: Erratic signal output	Emission control system: Mass air flow sensor: Erratic signal output (Erratic signal output)	Emission control system: Mass air flow sensor: Erratic signal output (Erratic signal output) (Erratic signal output)	Emission control system: Mass air flow sensor: Erratic signal output (Erratic signal output) (Erratic signal output) (Erratic signal output)
1	Discharged battery																																													
2	Will not crank or cranks slowly																																													
3	No combustion																	○								○								○	○											
4	Combustion observed engine will not start	○	○		○		○								○	○	○	○	○							○		○						○					○	○					
5	Cranks normally but hard to start													○																																
6	Low idle speed/Engine stalls or vibrates	○	○		○		○		○				○	○		○	○	○	○	○						○		○						○					○	○					
7	High idle speed			○		○																																								
8	Idle speed hard to lower			○																																										
9	Rough idle/Engine stalls when E/L, P/S or A/C ON			○																																										
10	Rough idle/Engine stalls during N–D shift			○																																										
11	Engine stalls when vehicle about to run																																											○		
12																																														
13	Poor acceleration/Insufficient power surges while cruising/Hesitates	○	○				○		○				○			○	○	○	○	○						○		○											○	○					
14	Runs rough during deceleration backfire				○													○																												
15	Knocking	○														○										○																			○	
16	Overheating																																													
17	Poor fuel economy								○									○								○																			○	
18	Fuel odor					○		○							○																	○														

No.	Item	Cause of trouble	Inspection method	Result
1	Discharged battery			
2	Will not crank or cranks slowly			
3	No combustion			
4	Combustion observed engine will not start			
5	Cranks normally but hard to start			
6	Low idle speed/Engine stalls or vibrates			
7	High idle speed			
8	Idle speed hard to lower			
9	Rough idle/Engine stalls when E/L, P/S or A/C ON			
10	Rough idle/Engine stalls during N–D shift			
11	Engine stalls when vehicle about to run			
12				
13	Poor acceleration/Insufficient power surges while cruising/Hesitates			
14	Runs rough during deceleration backfire			
15	Knocking			
16	Overheating			
17	Poor fuel economy			
18	Fuel odor			

③ DETERMINE THE CAUSE OF THE TROUBLE DETERMINED AT PROCEDURE ②, BASED ON THE RESULT OF THE MECHANICAL SYSTEM TEST

THE PART CAUSING TROUBLE, AS DETERMINED FROM THE RESULT OF THE MECHANICAL SYSTEM TEST.

X5U000WA1

Using the symptom troubleshooting

- Symptom troubleshooting shows diagnosis procedure, inspection method, and proper action to take for each trouble symptom.

TROUBLESHOOTING HINTS describes possible point of malfunction.

TROUBLE SYMPTOM

STEP shows the order of troubleshooting.

INSPECTION describes an inspection (method) to quickly determine the failed part.

Reference item(s) for the detailed procedure to perform INSPECTION is shown.

ACTION describes the appropriate action to take as a result (Yes/No) of INSPECTION.

How to perform ACTION is described on the reference item(s) shown.

9	Engine stalls		
Troubleshooting hints • Constant application of torque converter clutch piston			
STEP	INSPECTION		ACTION
1	Does the vehicle shake at shift point as well as at other points when decelerating?	Yes	Troubleshoot according to "Vehicle vibrates back and forth or engine stalls during deceleration".
		No	Go to step 2.
2	Check the voltage at the following powertrain control module terminal. • Brake switch signal ☞ 01–40 POWERTRAIN CONTROL MODULE (PCM) INSPECTION Is terminal voltage OK?	Yes	Go to step 3.
		No	Carry out the stall test. ☞ 05–17 MECHANICAL SYSTEM TEST, Stall Test, Stall test procedure
3	Does torque converter clutch solenoid valve voltage at powertrain control module terminal measure 0 V? ☞ 01–40 POWERTRAIN CONTROL MODULE (PCM) INSPECTION	Yes	Go to step 4.
		No	Check for poor connection of the connectors from powertrain control module to torque converter clutch solenoid valve.
4	Check if torque converter clutch solenoid valve is sticking. Is solenoid valve OK?	Yes	Go to step 5.
		No	Replace torque converter clutch solenoid valve.
5	Overhaul the AT[illegible] operation of torque co[illegible]	Yes	Go to step 6.
		No	Repair or replace torque converter clutch control valve or control valve body.
			[illegible]ce the torque converter.

UXU00015

Text Sequence

- The text sequence is as indicated by the arrows shown below.

Example:

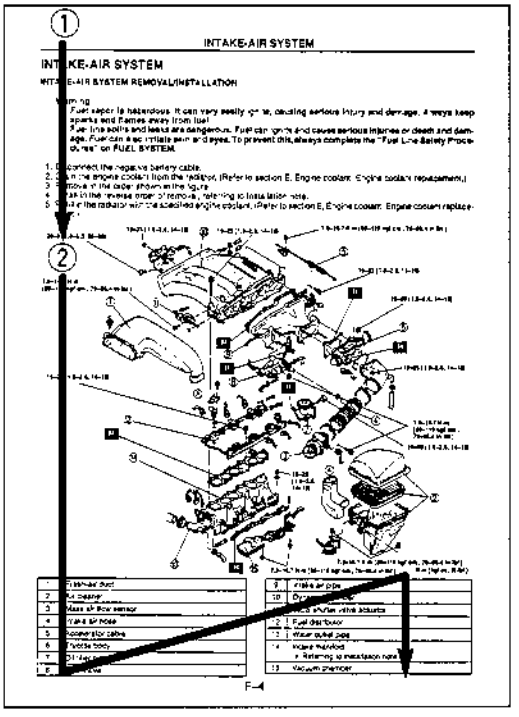

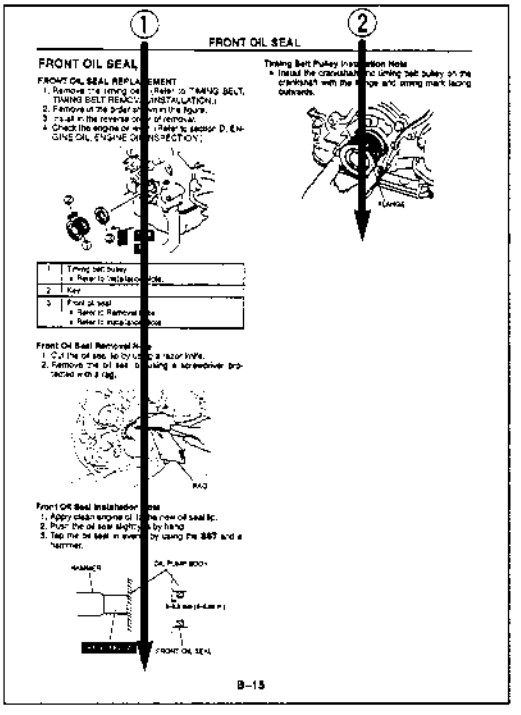

UXU00016

UNITS

UXU000AF

Electrical current	A (ampere)
Electric potential	V (volt)
Electric power	W (watt)
Length	mm (millimeter)
	in (inch)
Negative pressure	kPa (kilo Pascal)
	mmHg (millimeters of mercury)
	inHg (inches of mercury)
Positive pressure	kPa (kilo Pascal)
	kgf/cm^2 (kilogram force per square centimeter)
	psi (pounds per square inch)
Resistance	Ω (ohm)
Torque	N·m (Newton meter)
	kgf·m (kilogram force per meter)
	kgf·cm (kilogram force per centimeter)
	ft·lbf (foot pound)
	in·lbf (inch pound)
Volume	L (liter)
	US qt (U.S. quart)
	Imp qt (Imperial quart)
	ml (milliliter)
	cc (cubic centimeter)
	cu in (cubic inch)
	fl oz (fluid ounce)
Weight	g (gram)
	oz (ounce)

Conversion to SI Units (Système International d'Unités)

- All numerical values in this manual are based on SI units. Numbers shown in conventional units are converted from these values.

Rounding Off

- Converted values are rounded off to the same number of places as the SI unit value. For example, if the SI unit value is 17.2 and the value after conversion is 37.84, the converted value will be rounded off to 37.8.

Upper and Lower Limits

- When the data indicates upper and lower limits, the converted values are rounded down if the SI unit value is an upper limit and rounded up if the SI unit value is a lower limit. Therefore, converted values for the same SI unit value may differ after conversion. For example, consider 2.7 kgf/cm^2 in the following specifications:

  210—260 kPa {2.1—2.7 kgf/cm^2, 30—38 psi}
  270—310 kPa {2.7—3.2 kgf/cm^2, 39—45 psi}

- The actual converted values for 2.7 kgf/cm^2 are 264 kPa and 38.4 psi. In the top specification, 2.7 is used as an upper limit, so its converted values are rounded down to 260 and 38. In the bottom specification, 2.7 is used as a lower limit, so its converted values are rounded up to 270 and 39.

SAE STANDARDS

X5U000W02

- In accordance with new regulations, SAE (Society of Automotive Engineers) standard names and abbreviations are now used in this manual. The table below lists the names and abbreviations that have been used in Mazda manuals up to now and their SAE equivalents.

Previous Standard		New Standard		
Abbr.	Name	Abbr.	Name	Remark
—	Accelerator Pedal	AP	Accelerator Pedal	
—	Air Cleaner	ACL	Air Cleaner	
—	Air Conditioning	A/C	Air Conditioning	
—	Airflow Meter	VAF	Volume Air Flow Sensor	
—	Airflow Sensor	MAF	Mass Air Flow Sensor	
—	Alternator	GEN	Generator	
—	ATF Thermosensor	—	Transmission (Transaxle) Fluid Temperature Sensor	
—	Atmospheric Pressure	BARO	Barometric Pressure	
V_B	Battery Voltage	B+	Battery Positive Voltage	
—	Catalytic Converter	OC	Oxidation Catalytic Converter	
		TWC	Three Way Catalytic Converter	
		WU–TWC	Warm Up Three Way Catalytic Converter	Directly connected to exhaust manifold
—	Circuit Opening Relay	FPR	Fuel Pump Relay	In some models, there is a fuel pump relay that controls pump speed. That relay is now called the fuel pump relay (speed).
—	Clutch Position	CPP	Clutch Pedal Position	
—	Crank Angle Sensor	CMP	Camshaft Position Sensor	
—	Crank Angle Sensor 2	CKP	Crankshaft Position Sensor	
—	Diagnosis Connector	DLC	Data Link Connector	
—	Diagnosis/Self-Diagnosis	OBD	On-Board Diagnostic	
—	Direct Ignition	DLI	Distributorless Ignition	
—	EC-AT Control Unit	TCM	Transmission (Transaxle) Control Module	
EGI	Electronic Gasoline Injection System	CIS	Continuous Fuel Injection System	
—	Electronic Spark Ignition	EI	Electronic Ignition	Controlled by the PCM
ECU	Engine Control Unit	PCM	Powertrain Control Module	Device that controls engine and powertrain
		ECM	Engine Control Module	
—	Engine Modification	EM	Engine Modification	
—	Engine RPM Signal	—	Engine Speed Input Signal	
—	Evaporative Emission	EVAP	Evaporative Emission	
—	Exhaust Gas Recirculation	EGR	Exhaust Gas Recirculation	
—	Fan Control	FC	Fan Control	
—	Feedback System	CLS	Closed Loop System	
—	Flexible Fuel	FF	Flexible Fuel	
—	Fuel Pump	FP	Fuel Pump	
—	Fully Closed	CTP	Closed Throttle Position	
—	Fully Open	WOT	Wide Open Throttle	
—	Ground/Earth	GND	Ground	
—	IC Regulator	VR	Voltage Regulator	
—	Idle Speed Control	IAC	Idle Air Control	

Previous Standard		New Standard		
Abbr.	Name	Abbr.	Name	Remark
—	Idle Switch	—	Closed Throttle Position Switch	
—	Igniter	ICM	Ignition Control Module	
—	Inhibitor	TR	Transmission (Transaxle) Range	
—	Intake Air Pressure	MAP	Manifold Absolute Pressure	
—	Intake Air Thermo	IAT	Intake Air Temperature	
—	Intercooler	CAC	Charge Air Cooler	
—	Knock Sensor	KS	Knock Sensor	
—	Line Pressure Solenoid Valve	—	Pressure Control Solenoid	
—	Lock-up	TCC	Torque Converter Clutch	
—	Malfunction Indicator Light	MIL	Malfunction Indicator Lamp	
—	Multiport Fuel Injection	MFI	Multiport Fuel Injection	
—	Open Loop	OL	Open Loop	
—	Overdrive	4GR	Fourth Gear	
—	Oxygen Sensor	HO2S	Heated Oxygen Sensor	With heater
		O2S	Oxygen Sensor	
—	Park/Neutral Range	PNP	Park/Neutral Position	
—	Power Steering Pressure	PSP	Power Steering Pressure	
—	Pulse Generator	—	Input/Turbine Speed Sensor	
—	Reed Valve	SAPV	Secondary Air Pulse Valve	
—	Secondary Air Injection System	PAIR	Pulsed Secondary Air Injection	Pulsed injection
		AIR	Secondary Air Injection	Inject with compressor
—	Sequential Fuel Injection	SFI	Sequential Multipoint Fuel Injection	
—	Service Code(s)	DTC	Diagnostic Trouble Code(s)	
—	Spark Ignition	DI	Distributor Ignition	
—	Stoplight Switch	—	Brake Switch	
—	Test Mode	DTM	Diagnostic Test Mode	Diagnostic trouble codes depend on the diagnostic test mode
—	Throttle Body	TB	Throttle Body	
—	Throttle Sensor	TP	Throttle Position Sensor	
—	Turbocharger	TC	Turbocharger	
—	Vehicle Speed Sensor	VSS	Vehicle Speed Sensor	
—	Vehicle Speed Sensor 1	—	Output Speed Sensor	
—	Water Thermo	ECT	Engine Coolant Temperature	
—	1–2 Shift Solenoid Valve	—	Shift Solenoid A	
	Shift + A Solenoid Valve			
—	2–3 Shift Solenoid Valve	—	Shift Solenoid B	
	Shift + B Solenoid Valve			
—	3–4 Shift Solenoid Valve	—	Shift Solenoid C	
—	3rd Gear	3GR	Third Gear	
—	—	—	Incorrect Gear Ratio	

FUNDAMENTAL PROCEDURES

X5U000W03

Protection of the Vehicle

- Always be sure to cover fenders, seats, and floor areas before starting work.

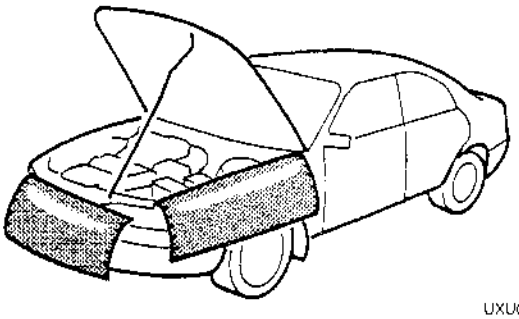

UXU00017

Preparation of Tools and Mesuring Equipment

- Be sure that all necessary tools and measuring equipment are available before starting any work.

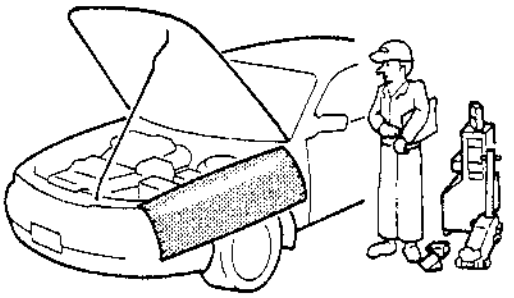

UXU00018

Special Tools

- Use special tools when they are required.

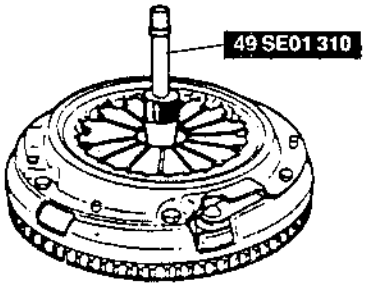

UXU00019

Disconnection of the Negative Battery Cable

- Before beginning any work, turn the ignition switch to LOCK, then disconnect the negative battery cable and wait for more than 1 minute to allow the backup power supply of the SAS unit and side air bag sensors to deplete its stored power.

Removal of Parts

- While correcting a problem, try also to determine its cause. Begin work only after first learning which parts and subcomponents must be removed and disassembled for replacement or repair. After removing the part, plug all holes and ports to prevent foreign material from entering.

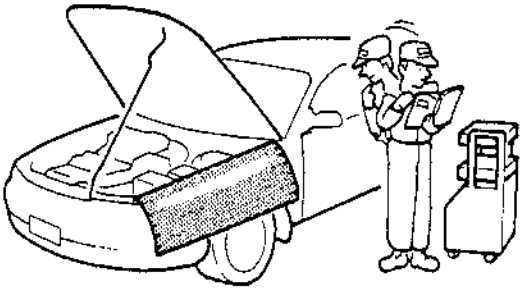

UXU00020

Disassembly

- If the disassembly procedure is complex, requiring many parts to be disassembled, all parts should be disassembled in a way that will not affect their performance or external appearance and identified so that reassembly can be performed easily and efficiently.

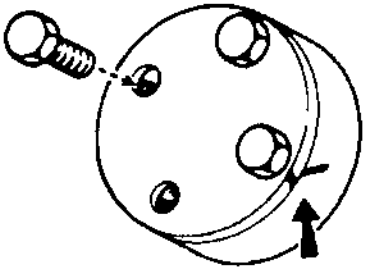

UXU00021

Inspection During Removal, Disassembly

- When removed, each part should be carefully inspected for malfunctioning, deformation, damage, and other problems.

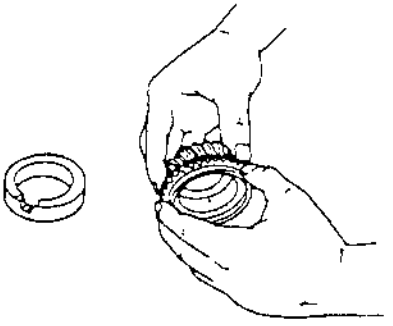

UXU00022

Arrangement of Parts

- All disassembled parts should be carefully arranged for reassembly.
- Be sure to separate or otherwise identify the parts to be replaced from those that will be reused.

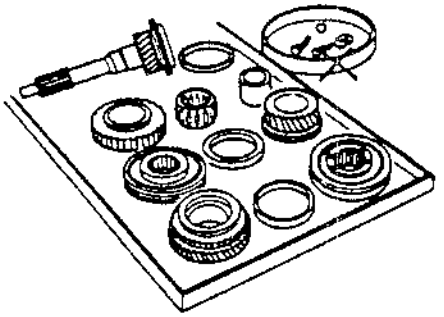

UXU00023

Cleaning of Parts

- All parts to be reused should be carefully and thoroughly cleaned in the appropriate method.

Warning

- **Using compressed air can cause dirt and other particles to fly out, causing injury to the eyes. Wear protective eye wear whenever using compressed air.**

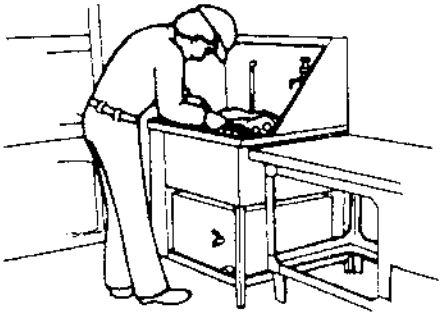

UXU00024

Reassembly

- Standard values, such as torques and certain adjustments, must be strictly observed in the reassembly of all parts.

If removed, these parts should be replaced with new ones:

- Oil seals
- Gaskets
- O-rings
- Lockwashers
- Cotter pins
- Nylon nuts

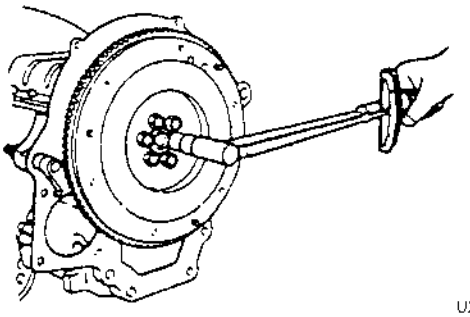

UXU00025

Depending on location:

- Sealant, gasket, or both should be applied to the specified locations. When sealant is applied, parts should be installed before sealant hardens. Hardened sealant causes leaks.
- Oil should be applied to the moving components of parts.
- Specified oil or grease should be applied at the prescribed locations (such as oil seals) before reassembly.

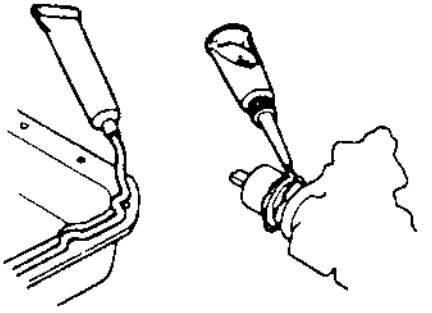

UXU00026

Adjustments

- Use suitable gauges and testers when making adjustments.

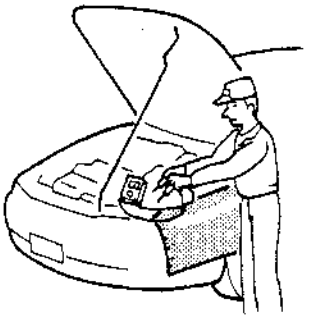

UXU00027

Rubber Parts and Tubing

- Prevent gasoline or oil from spilling on rubber parts or tubing.

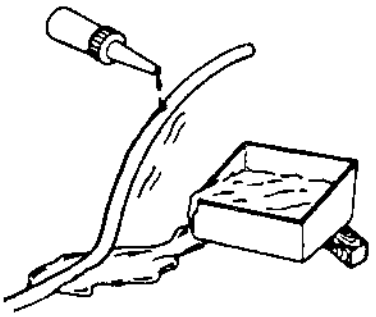

UXU00028

Hose Clamps

- When reinstalling, position the hose clamp in the original location on the hose, and squeeze the clamp lightly with large pliers to ensure a good fit.

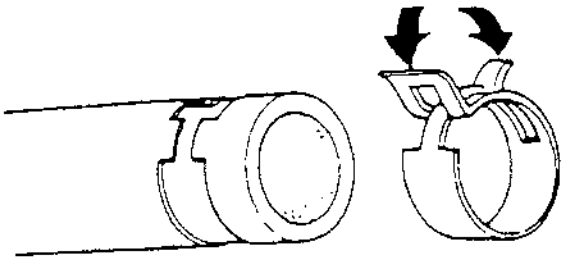

UXU00029

Torque Formulas

- When using a torque wrench-**SST** combination, the written torque must be recalculated due to the extra length that the **SST** adds to the torque wrench. Recalculate the torque by using the following formulas. Choose the formula that applies to you.

Torque Unit	Formula
N·m	N·m × [L/(L+A)]
kgf·m	kgf·m × [L/(L+A)]
kgf·cm	kgf·cm × [L/(L+A)]
ft·lbf	ft·lbf × [L/(L+A)]
in·lbf	in·lbf × [L/(L+A)]

A : The length of the **SST** past the torque wrench drive.
L : The length of the torque wrench.

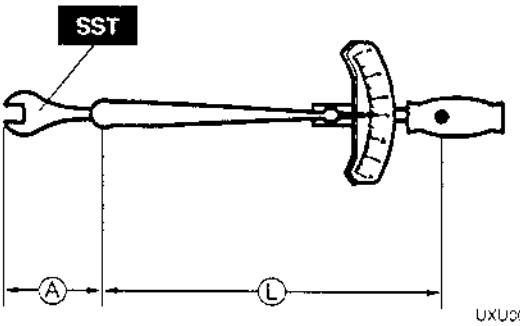

UXU00030

Vise

- When using a vise, put protective plates in the jaws of the vise to prevent damage to parts.

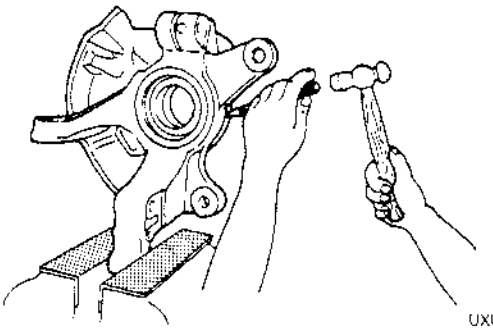

UXU00031

Dynamometer

- When test-running a vehicle on a dynamometer:
  - Place a fan, preferably a vehicle-speed proportional type, in front of the vehicle.
  - Connect an exhaust gas ventilation unit.
  - Cool the exhaust pipes with a fan.
  - Keep the area around the vehicle uncluttered.
  - Watch the water temperature gauge.

Note

- When the vehicle is on a chassis roller and only the front wheels rotate, the ABS warning light may illuminate. Refer to 04–01 PRECAUTION to turn off the warning light.

INSTALLATION OF RADIO SYSTEM

X5U00WC4

If a radio system is installed improperly or if a high-powered type is used, the CIS and other systems may be affected. When the vehicle is to be equipped with a radio, observe the following precautions:

1. Install the antenna at the farthest point from control modules.
2. Install the antenna feeder as far as possible from the control module harnesses.
3. Ensure that the antenna and feeder are properly adjusted.
4. Do not install a high-powered radio system.

ELECTRICAL SYSTEM

Electrical Parts

Battery cable

- Before disconnecting connectors or removing electrical parts, disconnect the negative battery cable.

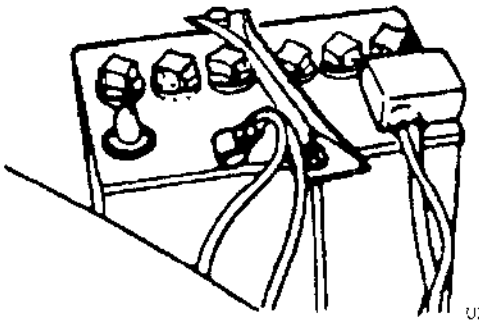

UXU00032

Connectors

Data link connector

- Insert the probe into the service hole when connecting a jumper wire to the data link connector.

Caution

- **Inserting a jumper wire probe into the data link connector terminal may damage the terminal.**

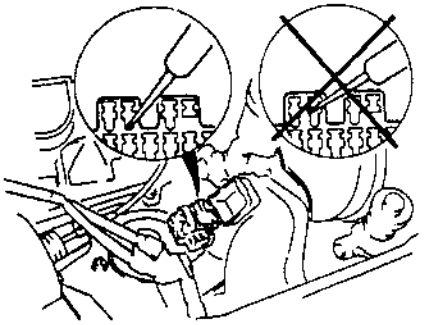

UXU00033

Disconnecting connectors

- When disconnecting two connectors, grasp the connectors, not the wires.

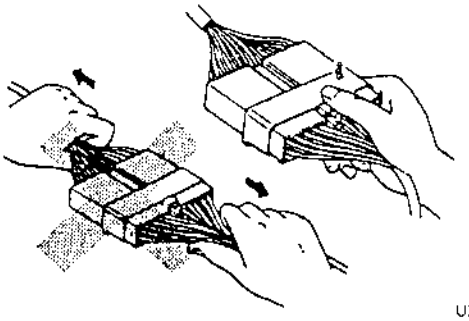

UXU00034

- Connectors can be disconnected by pressing or pulling the lock lever as shown.

X5U000W05

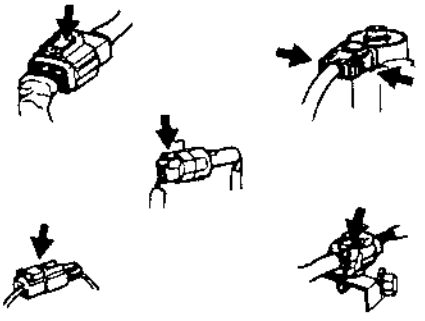

UXU00035

Locking connector

- When locking connectors, listen for a click that will indicate they are securely locked.

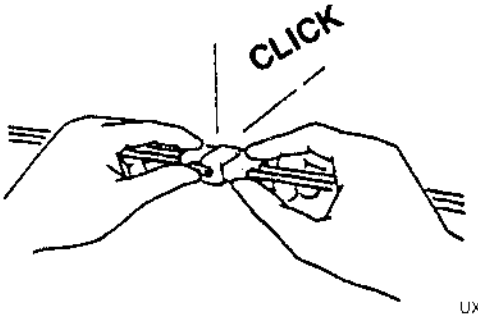

UXU00036

Inspection

1. When a tester is used to check for continuity or to measure voltage, insert the tester probe from the wiring harness side.

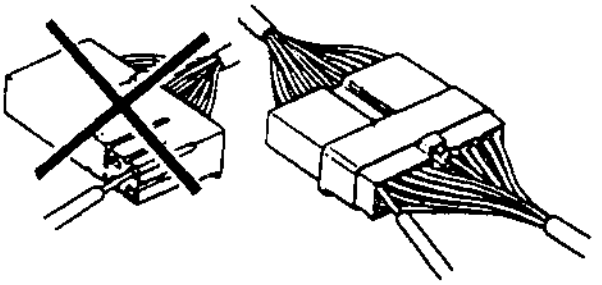

UXU00037

2. Check the terminals of waterproof connectors from the connector side, as they cannot be accessed from the wiring harness side.

Caution

- **To prevent damage to the terminal, wrap a thin wire around the lead before inserting it into the terminal.**

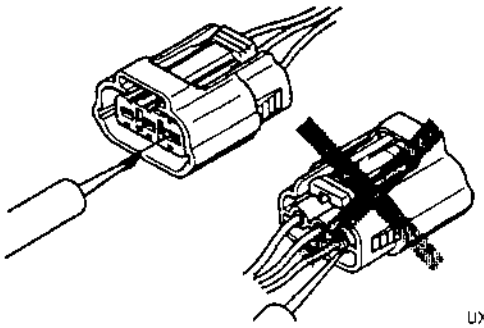

UXU00038

Terminals
Inspection

- Pull lightly on individual wires to check that they are secured in the terminal.

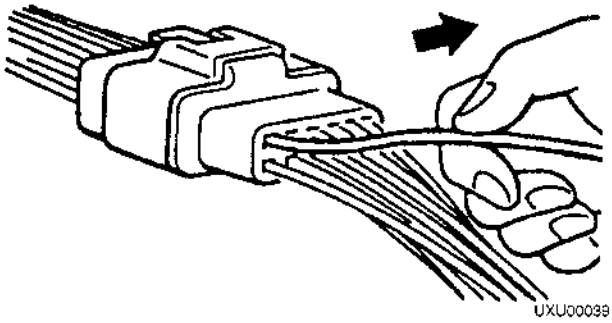

UXU00039

Replacement

- Use the appropriate tools to remove a terminal as shown. When installing a terminal, be sure to insert it until it locks securely.
- Insert a thin piece of metal from the terminal side of the connector, and then, with the terminal locking tab pressed down, pull the terminal out from the connector.

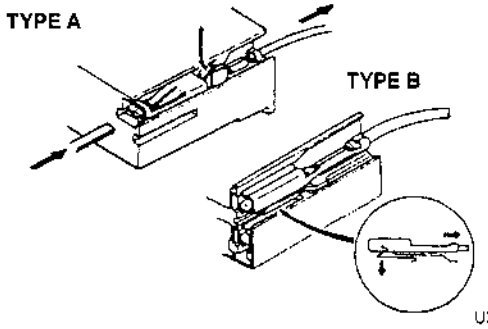

UXU00040

Sensors, Switches, and Relays

- Handle sensors, switches, and relays carefully. Do not drop them or strike them against other objects.

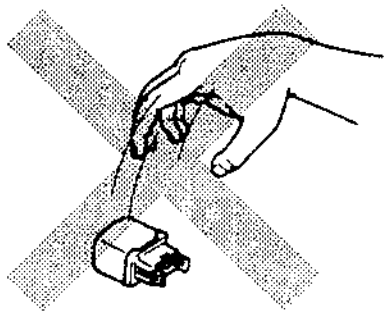

UXU00041

Wiring Harness
Wiring color codes

- Two-color wires are indicated by a two-color code symbol.
- The first letter indicates the base color of the wire and the second the color of the stripe.

CODE	COLOR		CODE	COLOR
B	Black		O	Orange
BR	Brown		P	Pink
G	Green		R	Red
GY	Gray		V	Violet
L	Blue		W	White
LB	Light Blue		Y	Yellow
LG	Light Green			

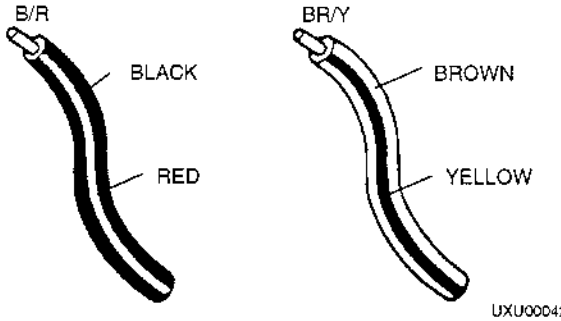

UXU00042

Fuse
Replacement

1. When replacing a fuse, be sure to replace it with one of the specified capacity. If a fuse again fails after it has been replaced, the circuit probably has a short and the wiring should be checked.
2. Be sure the negative battery terminal is disconnected before replacing a main fuse.

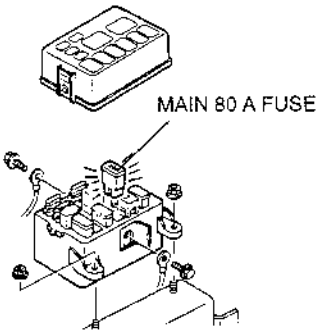

3. When replacing a pullout fuse, use the fuse puller.

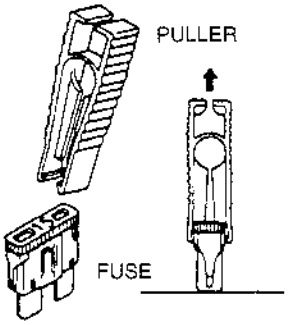

Electrical Troubleshooting Tools
Jumper wire

- A jumper wire is used to create a temporary circuit. Connect the jumper wire between the terminals of a circuit to bypass a switch.

Caution

- **Do not connect a jumper wire from the power source line to a body ground; this may cause burning or other damage to wiring harnesses or electronic components.**

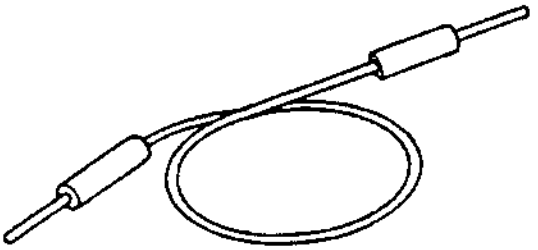

Voltmeter

- The DC voltmeter is used to measure circuit voltage. A voltmeter with a range of 15 V or more is used by connecting the positive (+) probe (red lead wire) to the point where voltage is to be measured and the negative (−) probe (black lead wire) to a body ground.

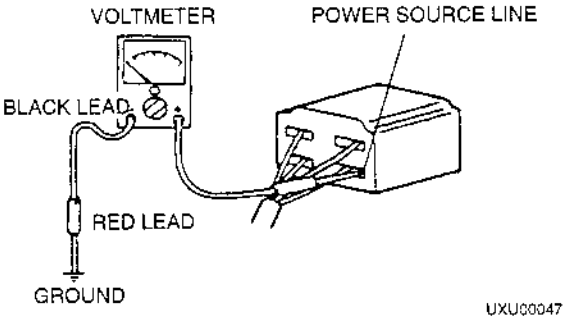

Ohmmeter

- The ohmmeter is used to measure the resistance between two points in a circuit, and to check for continuity and short circuits.

Caution

- **Do not connect the ohmmeter to any circuit to which voltage is applied. This will damage the ohmmeter.**

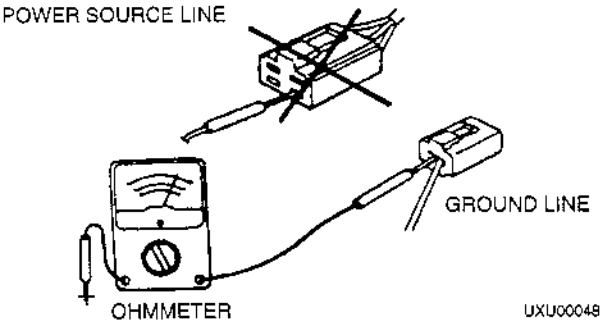

JACKING POSITIONS

X5U000W06

Warning

- **Improperly jacking a vehicle is dangerous. The vehicle can slip off the jack and cause serious injury. Use only the correct front and rear jacking positions and block the wheels.**

Use safety stands to support the vehicle after it has been lifted.

Front
At the center of the crossmember

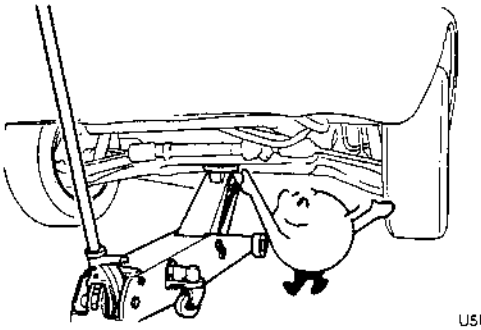

U5U00001

Rear
At the center of the differential

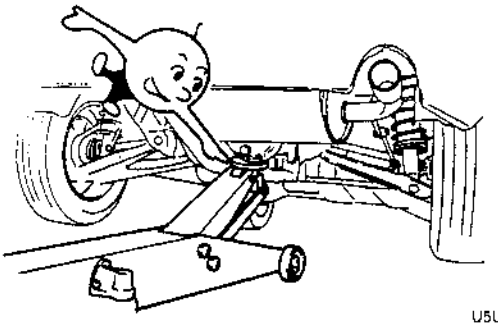

U5U00002

VEHICLE LIFT (2 SUPPORTS) AND SAFETY STAND (RIGID RACK) POSITION

X5U000W07

Vehicle Lift Positions
Front
Both sides of the vehicle, on side sills

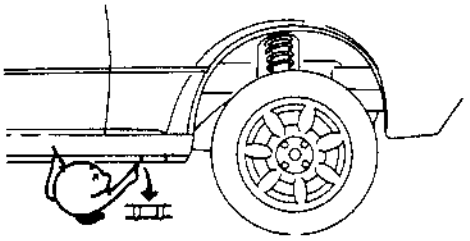

X5U000WA2

Rear
Both sides of the vehicle, on side sills

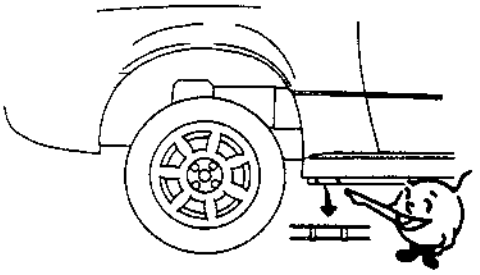

X5U000WA3

Safety Stand Positions
Front
Both sides of the vehicle, on side sills

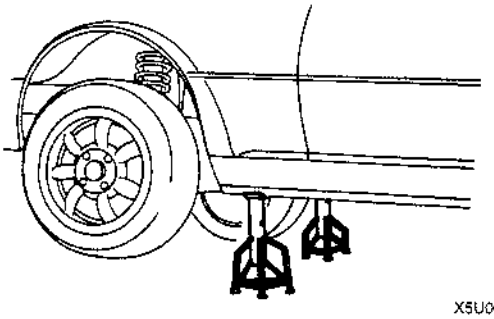

X5U000WA4

Rear
Both sides of the vehicle, on side sills

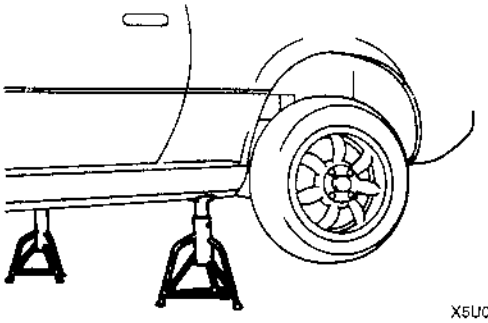

X5U000WA5

TOWING

X5U000W08

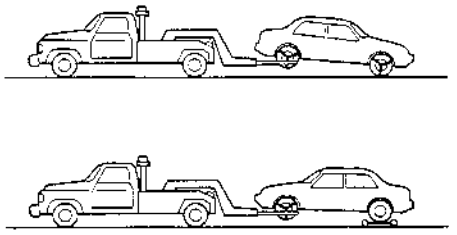

X5U000WA8

Proper lifting and towing are necessary to prevent damage to the vehicle. State and local laws must be followed.
A towed vehicle usually should have its rear wheels off the ground. If excessive damage or other conditions prevent this, use wheel dollies.

Caution

- **Do not use the hook loops under the front and rear for towing. They are designed ONLY for tying down the vehicle when its' being transported. Using them for towing will damage the bumper.**

TIEDOWN HOOKS/FRONT

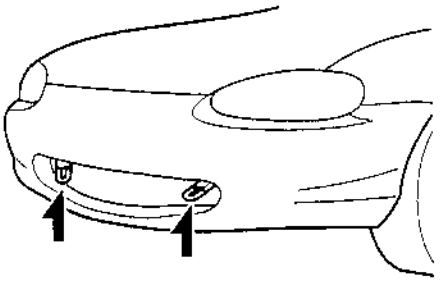

X5U000WA6

TIEDOWN HOOKS/REAR

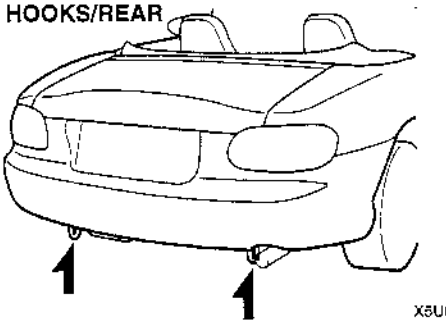

X5U000WA7

IDENTIFICATION NUMBER LOCATIONS

U5U000AG

Vehicle Identification Number (VIN)

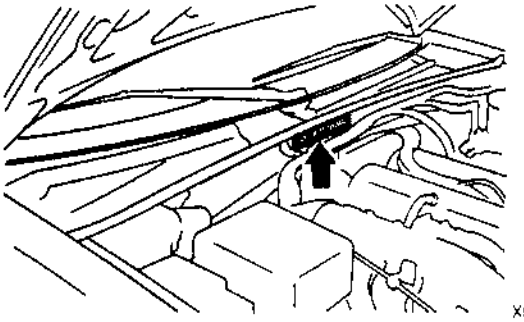

X5U000WA9

Automatic Transmission Number

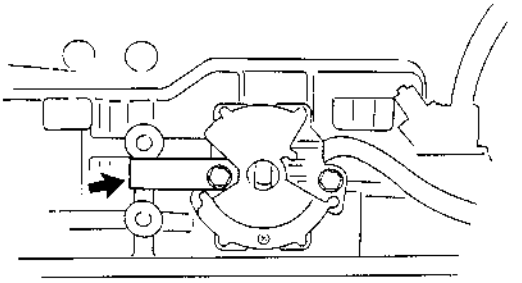

X5U000WAB

Engine Identification Number

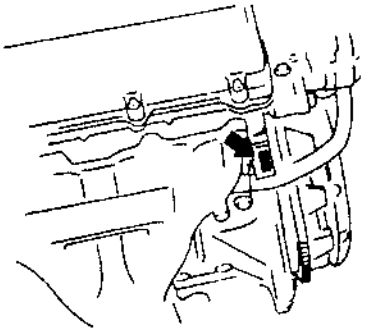

X5U000WAA

ABBREVIATIONS

X5U00W09

AAS	Air adjusting screw
ABS	Antilock brake system
A/C	Air conditioner
ACC	Accessories
ALR	Automatic locking retractor
AT	Automatic transmission
ATF	Automatic transmission fluid
AV	Pressure reduction valve
CDCV	Canister drain cut valve
CM	Control module
D	Drive
DRL	Daytime running light
EC-AT	Electronically controlled automatic transmission
ELR	Emergency locking retractor
EV	Pressure retention valve
EX	Exhaust
HI	High
HU	ABS hydraulic unit
IAC	Idle air control
IG	Ignition
IN	Intake
INT	Intermittent
LF	Left front
LH	Left hand

LO	Low
LR	Left rear
LSD	Limited slip differential
M	Motor
MT	Manual transmission
N	Neutral
O/D	Overdrive
OFF	Switch off
ON	Switch on
P	Park
PCV	Positive crankcase ventilation
PPF	Power plant frame
P/S	Power steering
R	Reverse
RF	Right front
RH	Right hand
RR	Right rear
SAS	Sophisticated air bag sensor
SST	Special service tool
SW	Switch
TAS	Throttle adjusting screw
TDC	Top dead center
TNS	Tail number side lights
TPCV	Tank pressure control valve
VICS	Variable inertia charging system

PRE-DELIVERY INSPECTION

X5U000W10

Pre-Delivery Inspection Table

Exterior

INSPECT and **ADJUST**, if necessary, the following items to specification:

- ☐ Glass, exterior bright metal and paint for damage
- ☐ Convertible top and detachable hardtop (if equipped) for damage
- ☐ Wheel lug nuts
- ☐ All weatherstrips for damage or detachment
- ☐ Operation of hood release and lock
- ☐ Operation of fuel lid
- ☐ Door operation and alignment
- ☐ Headlight aiming

INSTALL the following parts:

- ☐ Wheel caps (if equipped)
- ☐ Mast antenna (if equipped)

Under hood—engine off

INSPECT and **ADJUST**, if necessary, the following items to specification:

- ☐ Fuel, coolant, and hydraulic lines, fittings, connections, and components for leaks
- ☐ Engine oil level
- ☐ Power steering fluid level (if equipped)
- ☐ Brake and clutch master cylinder fluid level
- ☐ Windshield washer reservoir fluid level
- ☐ Radiator coolant level and specific gravity
- ☐ Tightness of battery terminals

Interior

CHECK the operation of the following items:

- ☐ Seat controls (sliding and reclining)
- ☐ Seat belts and warning system
- ☐ Air bag system using warning light
- ☐ Cruise control system (if equipped)
- ☐ Ignition switch and steering lock
- ☐ Starter interlock switch (clutch pedal)
- ☐ Power windows (if equipped)
- ☐ Door locks
- ☐ All lights including warning and indicator lights
- ☐ Horn, wipers, and washers
- ☐ Wiper blades performance
  Clean the wiper blades and windshield, if necessary
- ☐ Audio system
- ☐ Cigarette lighter
- ☐ Power outside mirrors (if equipped)
- ☐ Heater, defroster, and air conditioner at all mode selections (if equipped)

CHECK the following items:

- ☐ Presence of spare fuse
- ☐ Upholstery and interior finish

CHECK and **ADJUST**, if necessary, the following items:

- ☐ Pedal height and free play of brake and clutch pedal (Refer to section 04 and 05)
- ☐ Parking brake (Refer to section 04)

Under hood—engine running at operating temperature

CHECK the following items:

- ☐ Automatic transmission oil level

On hoist

CHECK the following items:

- ☐ Underside fuel, coolant and hydraulic lines, fittings, connections, and components for leaks
- ☐ Tires for cuts or bruises
- ☐ Steering linkage, suspension, exhaust system, and all underside hardware for looseness or damage
- ☐ Manual transmission oil level
- ☐ Differential oil level

Road test

CHECK the following items:

- ☐ Brake operation
- ☐ Clutch operation
- ☐ Steering control
- ☐ Operation of meters and gauges
- ☐ Squeaks, rattles, or unusual noises
- ☐ Overall engine performance
- ☐ Seat belt emergency locking retractors
- ☐ Cruise control system (if equipped)

After road test

CHECK for owner information materials, tools, and spare tire in vehicle

The following items must be done just before delivery to your customer.

- ☐ Load test battery and charge if necessary
  (Load test result: Volts)
- ☐ Adjust tire pressure to specification
- ☐ Clean outside of vehicle
- ☐ Install fuses for accessories
- ☐ Remove seat and floor mat protective covers
- ☐ Vacuum and clean interior of vehicle
- ☐ Inspect installation of option parts with invoice

SCHEDULED MAINTENANCE

X5U000W11

Scheduled Maintenance Table (Except Canada)
Schedule 1 (Normal driving conditions)

- The vehicle is mainly operated where none of the "unique driving conditions" apply.

Maintenance Item	Maintenance Interval (Number of months or miles (kilometers), whichever comes first)								
	Months		6	12	18	24	30	36	42	48
	× 1000	Kilometers	12	24	36	48	60	72	84	96
		Miles	7.5	15	22.5	30	37.5	45	52.5	60
Engine										
Engine valve clearance										I
Engine oil			R	R	R	R	R	R	R	R
Oil filter			R	R	R	R	R	R	R	R
Tension of all drive belts						I				I
Engine timing belt*1			Replace every 60,000 miles (96,000 km)							
Engine timing belt*2*3			Inspect at 60,000 miles (96,000 km), and again at 90,000 miles (144,000 km)							
			Replace every 105,000 miles (168,000 km)							
Ignition system										
Spark plugs						R				R
Fuel system										
Idle speed						I*3				I*3
Air cleaner element						R				R
Fuel filter										R*3
Fuel lines and hoses						I*3				I*3
Hoses and tubes for emission										I*3
Cooling system										
Cooling system						I				I
Engine coolant			Replace at first 45,000 miles (72,000 km) or 36 months; after that, every 30,000 miles (48,000 km) or 24 months.							
Chassis and body										
Brake lines, hoses and connections						I				I
Disc brakes						I				I
Manual transmission oil										R
Rear differential oil										R
Steering operation and linkages						I				I
Front suspension ball joints						I				I
Drive shaft dust boots						I				I
Bolts and nuts on chassis and body						I				I
Exhaust system heat shields						I				I
All locks and hinges			L	L	L	L	L	L	L	L
Air conditioner system (if equipped)										
Refrigerant amount				I		I		I		I
Compressor operation				I		I		I		I

Chart symbols

I : Inspect and repair, clean, or replace if necessary. (As for the air cleaner element, inspect, and if necessary replace.)
R : Replace
L : Lubricate

Remarks

- After 48 months or 60,000 miles (96,000 km), continue to follow the described maintenance at the recommended intervals.

*1 : Vehicles not covered under *2 below.
*2 : Under the authority of § 177 of the Federal Clean Air Act, some states require that new vehicles registered in their jurisdictions comply with California's emission control system scheduled maintenance services requirements. If your vehicle was initially registered in such a state, or in California, the scheduled maintenance services set forth in this section apply to it.
*3 : According to state and federal regulations, failure to perform maintenance on these items will not void your emissions warranties. However, Mazda recommends that all maintenance services be performed at the recommended time or mileage period to ensure long-term reliability.

Schedule 2 (Unique driving conditions)

- Repeated short-distance driving.
- Driving in dusty conditions.
- Driving with extended use of brakes.
- Driving in areas where salt or other corrosive materials are used.
- Driving on rough or muddy roads.
- Extended periods of idling or low-speed operation.
- Driving for long periods in cold temperatures or extremely humid climates.

Maintenance Item	Maintenance Interval (Number of months or miles (kilometers), whichever comes first)												
	Months		4	8	12	16	20	24	28	32	36	40	44	48
	× 1000	Kilometers	8	16	24	32	40	48	56	64	72	80	88	96
		Miles	5	10	15	20	25	30	35	40	45	50	55	60
Engine														
Engine valve clearance														I
Engine oil			R	R	R	R	R	R	R	R	R	R	R	R
Engine oil (Puerto Rico)			Replace every 3,000 miles (4,800 km) or 3 months											
Oil filter			R	R	R	R	R	R	R	R	R	R	R	R
Tension of all drive belts								I						I
Engine timing belt*1			Replace every 60,000 miles (96,000 km)											
Engine timing belt*2*3			Inspect at 60,000 miles (96,000 km), and again at 90,000 miles (144,000 km)											
			Replace every 105,000 miles (168,000 km)											
Ignition system														
Spark plugs								R						R
Cooling system														
Cooling system								I						I
Engine coolant			Replace at first 45,000 miles (72,000 km) or 36 months; after that, every 30,000 miles (48,000 km) or 24 months											
Fuel system														
Fuel filter														R*3
Fuel lines and hoses								I*3						I*3
Idle speed								I*3						I*3
Air cleaner element					I*3			R			I*3			R
Hoses and tubes for emission														I*3
Chassis and body														
Brake lines, hoses and connections								I						I
Disc brakes					I			I			I			I
Manual transmission oil								R						R
Rear differential oil								R						R
Steering operation and linkages								I						I

Maintenance Item	Maintenance Interval (Number of months or miles (kilometers), whichever comes first)												
	Months		4	8	12	16	20	24	28	32	36	40	44	48
	× 1000	Kilometers	8	16	24	32	40	48	56	64	72	80	88	96
		Miles	5	10	15	20	25	30	35	40	45	50	55	60
Front suspension ball joints								I						I
Drive shaft dust boots								I						I
Bolts and nuts on chassis and body					I			I			I			I
Exhaust system heat shields								I						I
All locks and hinges			L	L	L	L	L	L	L	L	L	L	L	L
Air conditioner system (if equipped)														
Refrigerant amount					I			I			I			I
Compressor operation					I			I			I			I

Chart symbols

I : Inspect and repair, clean, or replace if necessary. (As for the air cleaner element, inspect, and if necessary replace.)
R : Replace
L : Lubricate

Remarks

- After 48 months or 60,000 miles (96,000 km), continue to follow the described maintenance at the recommended intervals.

*1 : Vehicles not covered under *2 below.
*2 : Under the authority of § 177 of the Federal Clean Air Act, some states require that new vehicles registered in their jurisdictions comply with California's emission control system scheduled maintenance services requirements. If your vehicle was initially registered in such a state, or in California, the scheduled maintenance services set forth in this section apply to it.
*3 : According to state and federal regulations, failure to perform maintenance on these items will not void your emissions warranties. However, Mazda recommends that all maintenance services be performed at the recommended time or mileage period to ensure long-term reliability.

Scheduled Maintenance Table (Canada)

Maintenance Item	Maintenance Interval (Number of months or miles (kilometers), whichever comes first)												
	Months		5	10	15	20	25	30	35	40	45	50	55	60
	× 1000	Kilometers	8	16	24	32	40	48	56	64	72	80	88	96
		Miles	5	10	15	20	25	30	35	40	45	50	55	60
Engine														
Engine valve clearance														I
Engine oil			R	R	R	R	R	R	R	R	R	R	R	R
Oil filter			R	R	R	R	R	R	R	R	R	R	R	R
Tension of all drive belts			I	I	I	I	I	I	I	I	I	I	I	I
Engine timing belt*1														R
Ignition system														
Spark plugs								R						R
Cooling system														
Engine coolant level and strength			I	I	I	I	I	I	I	I	I	I	I	I
Cooling system for leaks					I			I			I			I
Engine coolant			Replace at first 45,000 miles (72,000 km) or 45 months; after that, every 30,000 miles (48,000 km) or 30 months											
Fuel system														
Idle speed					I			I			I			I
Air cleaner element					I			R			I			R
Fuel lines and hoses								I*2						I
Fuel filter								R						R
PCV valve*2														I

Maintenance Item	Maintenance Interval (Number of months or miles (kilometers), whichever comes first)												
	Months		5	10	15	20	25	30	35	40	45	50	55	60
	×1000	Kilometers	8	16	24	32	40	48	56	64	72	80	88	96
		Miles	5	10	15	20	25	30	35	40	45	50	55	60
Emission hoses and tubes														I
Chassis and body														
Automatic transmission fluid level			I	I	I	I	I	I	I	I	I	I	I	I
Transmission oil (MT and AT)								R						R
Differential oil								R						R
Drive shaft dust boots								I						I
Brake lines and hoses								I						I
Brake and clutch fluid level			I	I	I	I	I	I	I	I	I	I	I	I
Brake fluid								R*3						R*3
Disc brakes (front and rear)					I			I			I			I
Tire inflation pressure and tire wear			I	I	I	I	I	I	I	I	I	I	I	I
Tires					Rt			Rt			Rt			Rt
Power steering fluid level			I	I	I	I	I	I	I	I	I	I	I	I
Steering operation and linkages (Includes four wheel alignment)								I						I
Suspension components (front and rear)								I						I
All chassis and body nuts and bolts					I			I			I			I
Exhaust system heat shields								I						I
All locks and hinges			L	L	L	L	L	L	L	L	L	L	L	L
Washer fluid level			I	I	I	I	I	I	I	I	I	I	I	I
Function of all lights			I	I	I	I	I	I	I	I	I	I	I	I
Air conditioner system (if equipped)														
Refrigerant amount				I		I		I		I		I		I
Compressor operation				I		I		I		I		I		I

Chart symbols

I : Inspect and repair, clean, or replace if necessary. (As for the air cleaner element, inspect, and if necessary replace.)
R : Replace
L : Lubricate
Rt : Rotate (tires)

Remarks

- After 60 months or 60,000 miles (96,000 km), continue to follow the described maintenance at the recommended intervals.
- Refer below for a description of items marked * in the maintenance chart.

*1 : Replacement of the timing belt is required every 60,000 miles (96,000 km). Failure to replace this belt may result in damage to the engine.
*2 : This maintenance is recommended by Mazda. However, it is not necessary for emission warranty coverage or manufacturer recall liability.
*3 : This maintenance is recommended by Mazda.

ENGINE

01 SECTION

01

01–01A TROUBLESHOOTING [ENGINE CONTROL]

FOREWORD

X5U101W01

Before proceeding with the following troubleshooting,
- Refer to section GI to understand the basic troubleshooting procedure.
- Perform the diagnostic trouble code inspection.
- If a diagnostic trouble code is displayed, proceed with inspection steps for the code.
- When the engine can be started, perform "ENGINE TUNE-UP".

ENGINE ON-BOARD DIAGNOSIS

X5U101W02

Descriptions
- Use the NGS tester for diagnosis on OBD-II equipped vehicles. The NGS tester has a generic scan tool function that is standard across the automotive industry in the United States. It also performs the manufacture's specific functions; that is, the NGS tester can perform various functions according to the vehicle and program card selected.

Generic Functions
- Use these functions by selecting "**GENERIC OBDII FUNCTIONS**" from the NGS tester menu screen. These functions enable you to monitor on-board diagnostic system data and Diagnostic Trouble Codes (DTCs) that are related to emissions, as defined and fixed by OBD-II regulations. These functions are found even in commonly marketed scan tools and are called "generic functions".

Specific Functions
- "Specific functions" are original scan tool functions created by various manufactures in order to be able to troubleshoot effectively. When using these functions, the correct vehicle model and program card must be selected.

Pending Trouble Codes
- The following functions are generic functions.
- These appear when a problem is detected in a monitored system. The MIL is illuminated when a problem is detected in two consecutive drive cycles. The code for a failed system is stored in the PCM memory in the first drive cycle. This code is called the pending code. If the problem is not found in the second drive cycle, the PCM judges that the system returned to normal or the problem was mistakenly detected, and deletes the pending code. If the problem is found in the second drive cycle too, the PCM judges that the system has failed, deletes the pending code, illuminates the MIL and stored the DTC.

Freeze Frame Data
- This is the technical data which indicates the engine's condition at the time of the first malfunction. This data will remain in the memory even if another emission-related DTC is stored, with the exception of the Misfire or Fuel System DTCs. Once freeze frame data for the Misfire or Fuel System DTC is stored, it will overwrite any previous data and the freeze frame will not be overwritten again.

On-Board System Readiness Test
- This shows OBD-II systems operating status. If any monitor function is incomplete, NGS tester will identify which monitor function has not been completed. Misfires, Fuel System and Comprehensive Components (CCM) are continuous monitoring-type functions and will display a "CONT" message on the screen of the NGS tester. The catalyst, EGR system, evaporation system and oxygen sensor will be monitored under drive cycles. The NGS tester will display a "YES" message once those system monitor functions are completed. The OBD-II diagnostic system is initialized by performing the DTC cancellation procedure or disconnecting the negative battery cable.

Diagnostic Monitoring Test Results
- These results from the intermittent monitor system's technical data, which are used to determine whether the system is normal or not. They also display the system's thresholds and diagnostic results. The intermittent monitor system monitors the oxygen sensor, evaporative purge system, catalyst and the EGR system.

Read/Clear Diagnostic Test Results
- The following functions are generic functions.
- This retrieves all stored Diagnostic Trouble Codes (DTCs) in the PCM and clears the DTC, Freeze Frame Data, On-Board Readiness Test Results, Diagnostic Monitoring Test Results and Pending Trouble Codes.

Parameter Identification (PID) Access
- The PID mode allows access to certain data values, analog and digital inputs and outputs, calculated values and system status information. Since PID values for output devices are PCM internal data values, perform the Simulation Test to identify which output devices are malfunctioning.

Simulation Test

- Output devices can be turned on and off by sending simulation command signals from the NGS tester to the Powertrain Control Module. The "Idling Test" and "Ignition ON Test" are available in this test. These tests will verify the PCM status, output devices, and related circuit wiring harnesses.

Diagnostic Support Procedure

- This tests the ability of the powertrain control system to detect a change in certain input devices by following the instructions on the NGS tester. There are two options: **ALL TEST** and **SINGLE TEST**. **ALL TEST** takes you through all the diagnostic support tests. **SINGLE TEST** enables you to perform specific tests that relate to the particular diagnosis that you are conducting. This test MUST follow the instructions on the NGS tester. If not, a "**TEST CONDITIONS NOT CORRECT**" message will appear, or else the test result will be **FAULTY**.

On-Board Diagnostic Test
New generation star (NGS) tester hook-up procedure

Note

- Make sure the ignition switch is off.

1. Insert the vehicle interface module and latest program card into the hand-held NGS control unit.

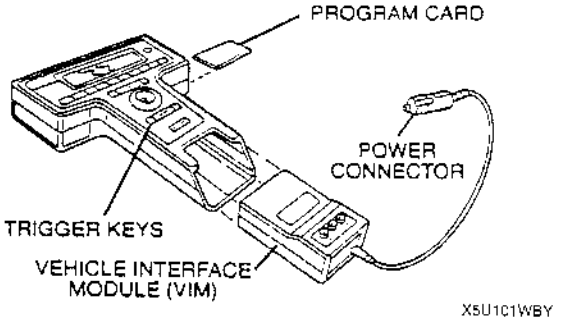

2. Plug the NGS OBD-II adapter into the vehicle interface module and the large 16 pin connector into the vehicle data link connector-2 (DLC-2) located under the left side of the center console.

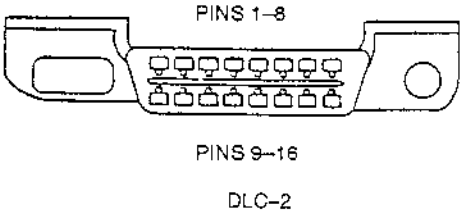

3. Plug the NGS tester power connector into the NGS OBD-II adapter power cable connector or cigarette lighter. Alternatively, enable to use a battery hook-up adapter.

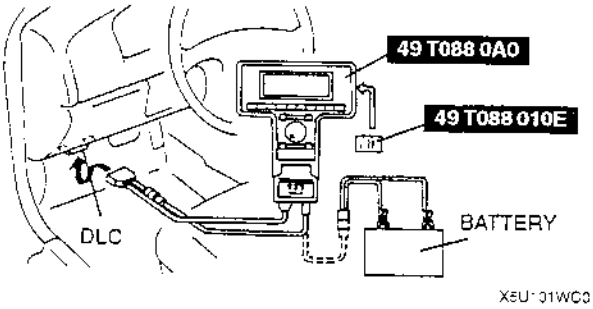

4. Listen for a double beep. The NGS tester is now initialized. Begin the powertrain control system functional test.

DTCs reading procedure

Note

- This is a specific function.
- Start engine and keep it running. If engine won't start, turn the ignition switch on during the procedure.

1. Perform the necessary vehicle preparation and visual inspection. Hook the NGS Tester up to the vehicle.

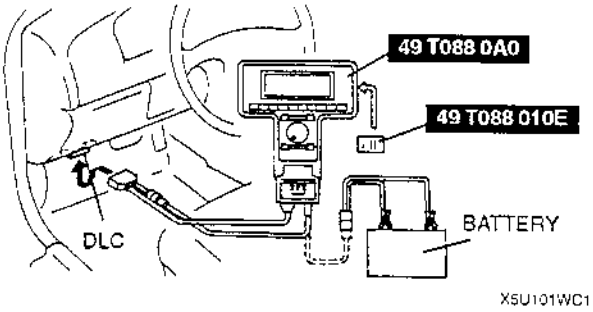

2. Move the cursor to **VEHICLE & ENGINE SELECTION**. Press the trigger key to enter this function.

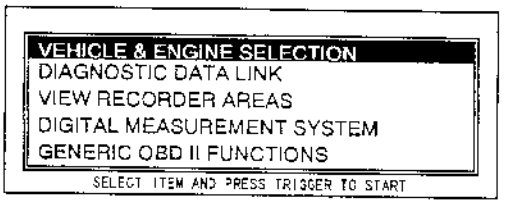

3. Move the cursor to **SELECT NEW VEHICLE YEAR & MODEL**. Press the trigger key to enter this selection.

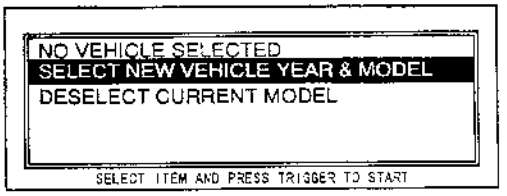

X5U101WC3

4. Move the cursor to **1999–VIN#10:X**. Press the trigger key to enter this selection.
5. Move the cursor to the appropriate model. Press the trigger key to enter this selection.

Note
- Make sure the selected vehicle is correct.

6. A vehicle selection screen showing the selected vehicle will be displayed. Move the cursor to the vehicle selected. Press the trigger key.
7. Move the cursor to **DIAGNOSTIC DATA LINK** on the main menu screen. Press the trigger key to enter into menu system diagnostics.

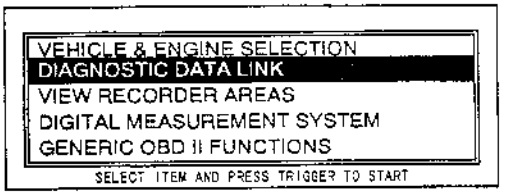

X5U101WC4

8. Move the cursor to **PCM – POWERTRAIN CONTROL MODULE**. Press the trigger key to enter this selection.

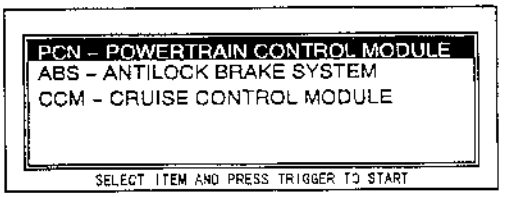

X5U101WC5

9. Move the cursor to **DIAGNOSTIC TEST MODES**. Press the trigger key to enter this selection.

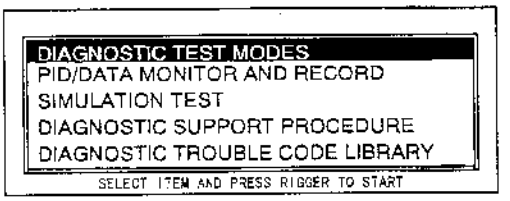

X5U101WC6

10. Move the cursor to **READ/CLEAR DIAGNOSTIC TEST RESULTS**. Press trigger key to enter this selection.

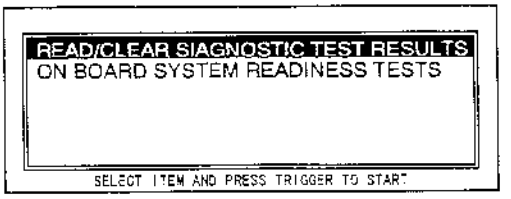

X5U101WC7

11. Press **START**.
12. Retrieve DTCs.

Pending trouble code access procedure

Note
- This is a generic function.
- Start engine and keep it running. If engine won't start, turn the ignition switch on during the procedure.

1. Perform the necessary vehicle preparation and visual inspection. Hook the NGS Tester up to the vehicle.

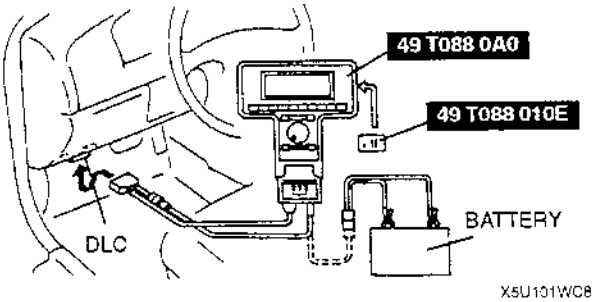

X5U101WC8

2. Move the cursor to **GENERIC OBDII FUNCTIONS**. Press the trigger key to enter this function.

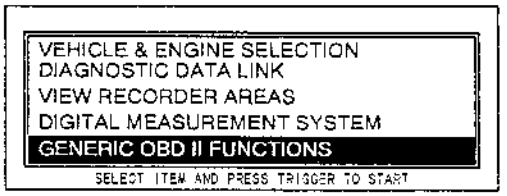

X5U101WC9

3. Press **CONT**.
4. Turn the menu dial clockwise to scroll the screen. Move the cursor to **PENDING TROUBLE CODES**. Press the trigger key to enter this selection.

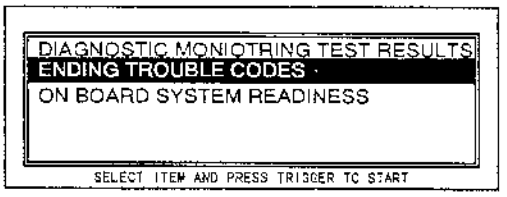

X5U101WCA

5. Press **START**.
6. Retrieve **PENDING trouble codes**.

Note
- If the "**NO DTCS AVAILABLE/NO RESPONSE**" message is shown on the screen, be sure to run the **PID DATA MONITOR** in **GENERIC OBDII FUNCTIONS** and confirm that the "**LINK COMMUNICATION ERROR. MODULE NOT RESPONDING. CHECK IGNITION STATUS AND CABLE CONNECTIONS**" message does not appear.

Freeze frame PID data access procedure

Note
- This is a generic function.

1. Perform the NGS tester hook-up procedure.
2. Move the cursor to **GENERIC OBDII FUNCTIONS**. Press the trigger key to enter this selection.

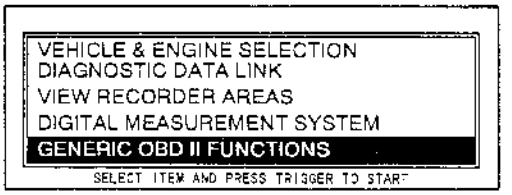

X5U101WCB

3. Press **CONT**.

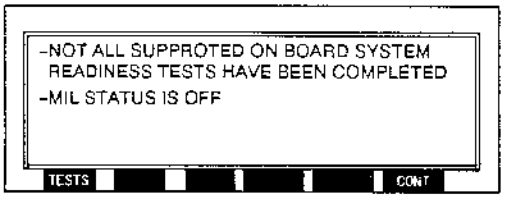

X5U101WCC

4. Move the cursor to **FREEZE FRAME PID DATA**. Press the trigger key to enter this selection.

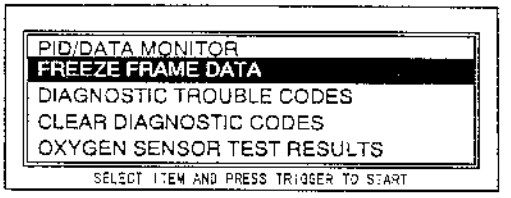

X5U101WCD

5. Record the freeze frame PID data.

Note
- If the OBD-II system did not store any DTCs, the NGS tester display will show "**NO TRIGGER CODE SET**".

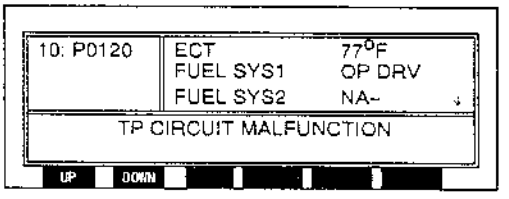

X5U101WCE

On-board system readiness tests access procedure

Note
- This is a generic function.

1. Perform the NGS tester hook-up procedure.
2. Move the cursor to **GENERIC OBDII FUNCTIONS**. Press the trigger key to enter this selection.

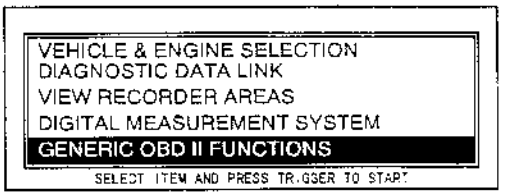

X5U101WCF

3. Press **TESTS**.

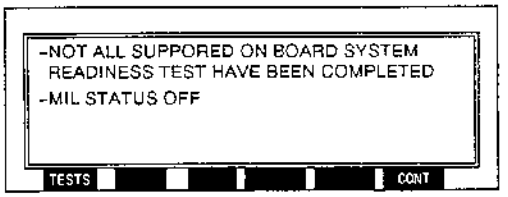

X5U101WCG

4. Monitor the OBD-II systems operating status.

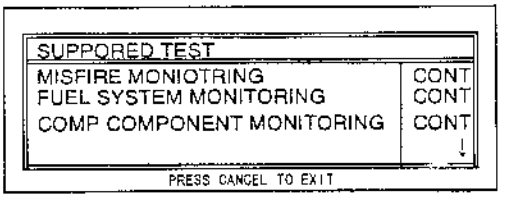

X5U101WCH

5. If each system's status initialization is necessary, use the following procedures:
   (1) Press the cancel key until you return to the main menu.
   (2) Move the cursor to **GENERIC OBDII FUNCTIONS**. Press the trigger key to enter this selection.
   (3) Press **CONT**.
   (4) Move the cursor to **CLEAR DIAGNOSTIC CODES**. Press trigger key to enter this selection.

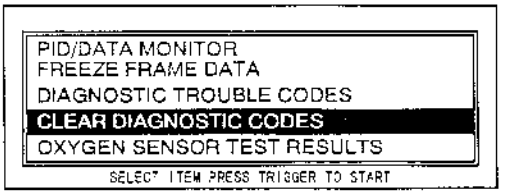

X5U101WCI

(5) Press **START**.

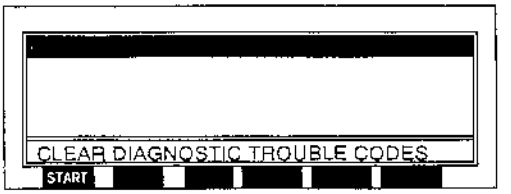

X5U101WCJ

PID/DATA monitor and record procedure

Note
- This is a specific function.

1. Perform the NGS tester Hook-up Procedure.
2. Perform steps 1 through 8 from the DTCs Reading Procedure.
3. Turn the ignition switch on or engine running.
4. Move the cursor to **PID/DATA MONITOR AND RECORD**. Press the trigger key to enter this selection.

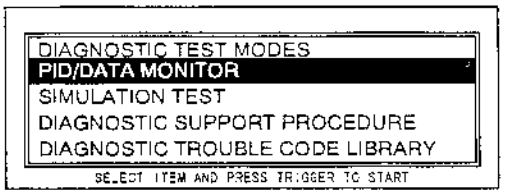

X5U101WCK

5. Move the cursor to PID values to view. Press the trigger key. A star symbol will appear next to the item when it is selected.

Note
- Press the trigger key once again to deselect a PID.
- Press **CLEAR** to deselect all PIDs.

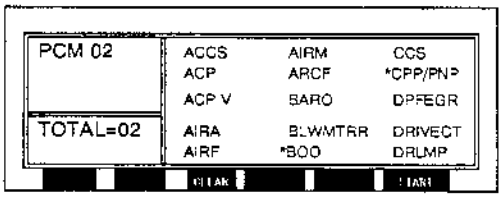

X5U101WCL

6. Press **START** to begin.
7. When ready to capture and store the selected PIDs, press the trigger key.
8. Press the trigger key again when ready to save information.
9. Move the cursor to **STORE RECORDING IN AREA 1**. Press the trigger key.

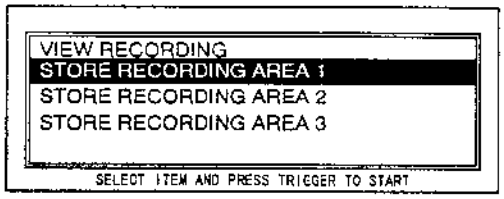

X5U101WCM

10. Follow the instructions displayed on the NGS tester to save the recording data.

Playback of stored PIDs procedure

Note
- This is a specific function.
- Look for abnormal behavior or values that are clearly incorrect. Inspect the signals for abrupt or unexpected changes.
- Look for agreement in related signals.
- Make sure signals act in proper sequence.

1. Select **VIEW RECORDER AREAS**.
2. Select a view area.
3. Select up to the four PIDs to review in the table format or two PIDs to review in the graph mode.
4. Table format: Scroll through the PID data while analyzing the information. Look for sudden drops or spikes in the values.

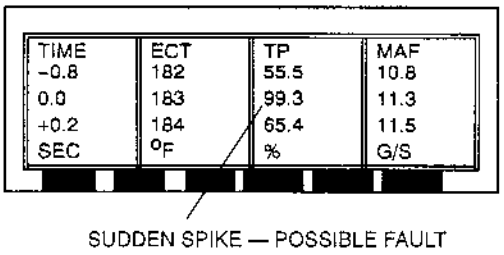

X5U101WCN

5. Graph format: Scroll through the PID data while analyzing the information Look for sudden drops or spikes in the linear lines showing the transformation of values to the line graph.

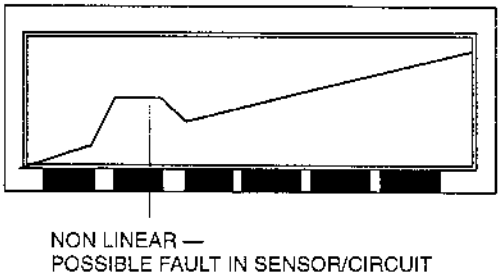

X5U101WCO

Diagnostic monitoring test results access procedure

Note
- This is a generic function.

1. Perform the NGS tester hook-up procedure.
2. Move the cursor to **GENERIC OBDII FUNCTIONS**. Press the trigger key to enter this selection.

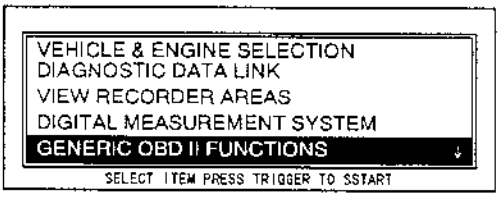

X5U101WCP

3. Press **CONT**.
4. Turn the menu dial clockwise to scroll the screen. Move the cursor to **DIAGNOSTIC MONITORING TEST RESULTS**. Press the trigger key to enter this selection.

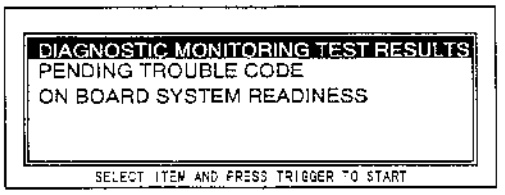

X5U101WCQ

5. Select and press **C-ALL** or **S-ALL**.

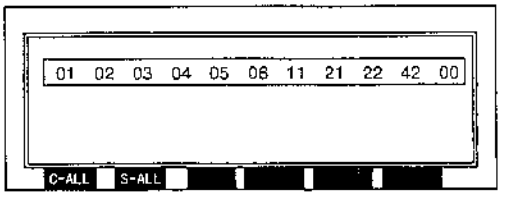

X5U101WCR

6. Press **START**.

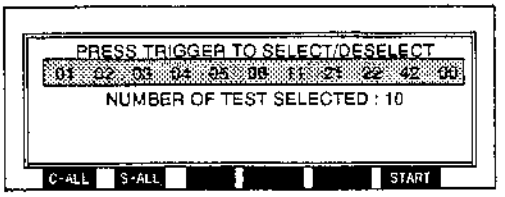

X5U101WCS

7. The screen immediately displays the results of each test with thresholds. Read the values.

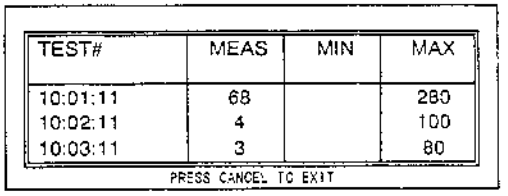

TEST#	MEAS	MIN	MAX
10:01:11	68		280
10:02:11	4		100
10:03:11	3		80

PRESS CANCEL TO EXIT

X5U101WCT

Diagnostic support procedure

Note
- This is a specific function.

1. Perform the NGS Tester Hook-up Procedure.
2. Perform steps 1 through 8 from the "**DTCs Reading Procedure**".
3. Move the cursor to **DIAGNOSTIC SUPPORT PROCEDURE**. Press the trigger key to enter this selection.

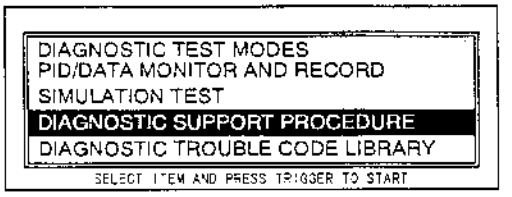

X5U101WCU

4. Move the cursor to **ALL TEST** or **SINGLE TEST**. Press the trigger key.

Note
- **ALL TEST** inspects each item according to an established programmed order. With **SINGLE TEST**, enable to select and inspect any test item in any order, one at a time.

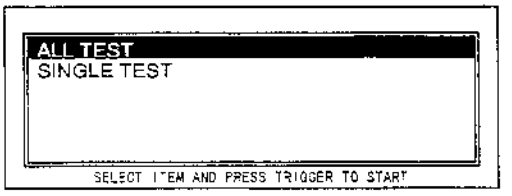

X5U101WCV

5. Follow the instructions displayed on the NGS tester and press the trigger key.

Note
- To skip a test item, press **OMIT**.
- Before performing the test, the basic condition on the test vehicle must be set-up in order to get exact data. Press **BASIC** to view the basic condition instruction screen.
- If the screen shows **PASSED**, the system operates correctly.
- If the screen shows **FAULTY**, the system operates incorrectly.

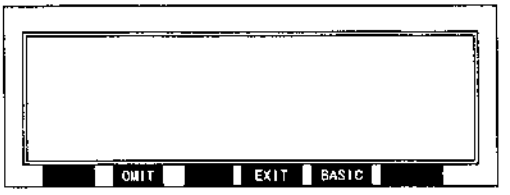

X5U101WCW

Oxygen sensor test results access procedure

Note
- This is a generic function.

1. Perform the NGS Tester Hook-up Procedure.
2. Move the cursor to **GENERIC OBDII FUNCTIONS**. Press the trigger key to enter this function.

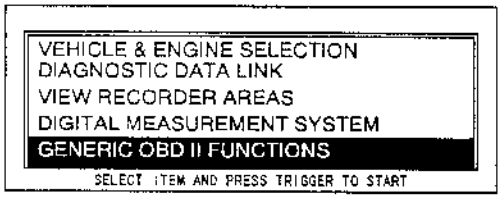

X5U101WCX

3. Press **CONT.**

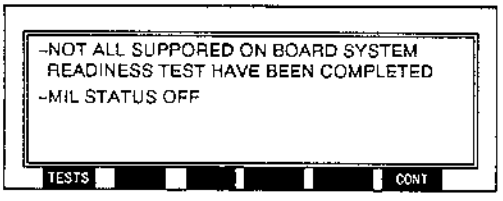

X5U101WCY

4. Move the cursor to **OXYGEN SENSOR TEST RESULTS**. Press the trigger key to enter this selection.

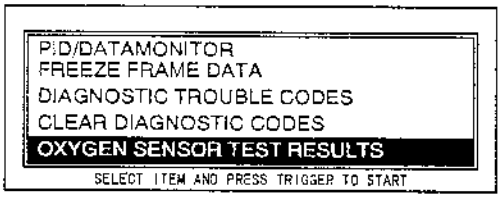

X5U101WCZ

5. Select **RICH TO LEAN THRESHOLD VOLTAGE** or **LEAN TO RICH THRESHOLD VOLTAGE**. Press the trigger key.

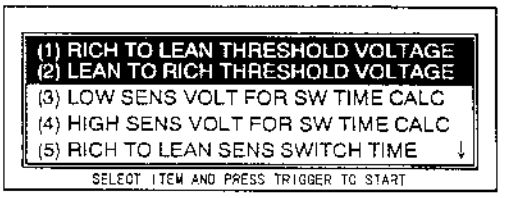

X5U101WD0

6. Read voltage.

BAMK	MEAS	MIN	MAX	UNIT
1–1	0.445	0.0	1.275	VOLT
1–2	0.445	0.0	1.275	VOLT
2–1	NA			↓

X5U101WD1

7. Press the cancel key.

Simulation test procedure

Note
- This is a specific function.

Idling test

1. Perform the NGS tester hook-up procedure.
2. Perform steps 1 through 8 from the **DTCs Reading Procedure**.
3. Start the engine and run it at idle.
4. Move the cursor to **SIMULATION TEST**. Press the trigger key to enter this selection.

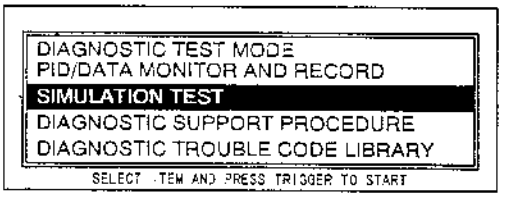

X5U101WD2

5. Move the cursor to **IDLING TEST**. Press the trigger key to enter this selection.

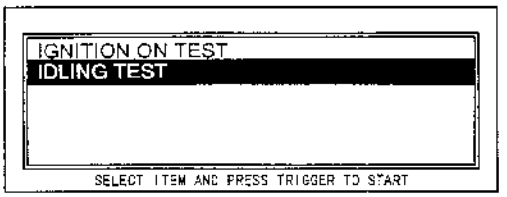

X5U101WD3

6. The screen will display PIDs. Select the appropriate PID for testing, then press the trigger.

Note
- Only one PID can be selected at a time.

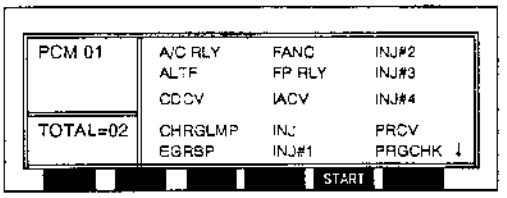

X5U101WD4

7. Press **START**.

Note
- If the screen displays "**TEST CONDITION NOT CORRECT**", check the following three signal conditions and determine whether or not they are normal:
  1. Idle SW: ON (Equipped vehicles)
  2. TR SW: P or N
  3. RPM: above 550

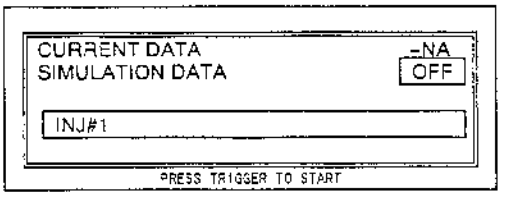

X5U101WD5

8. Press trigger key.
9. The simulation is performed **for 3 seconds**, and a "**SIMULATION ACTIVATED PLEASE WAIT**" message is displayed during those 3 seconds.

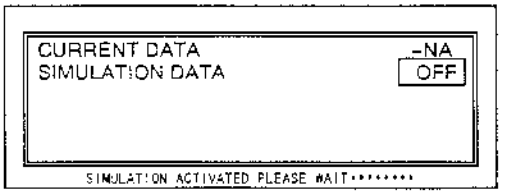

X5U101WD6

10. To perform the simulation again, press the trigger key. To exit the idling test, press the cancel key.

Ignition on test
1. Perform steps 1 through 8 from the **DTCs Reading Procedure**.
2. Turn ignition switch on. Move the cursor to **SIMULATION TEST**. Press the trigger key to enter this selection.

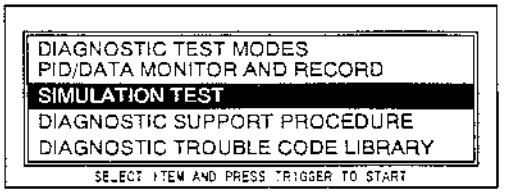

X5U101WD7

3. Move the cursor to **IGNITION ON TEST**. Press the trigger key to enter this selection.

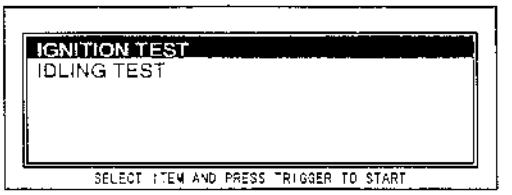

X5U101WD8

4. The screen will display a list of PIDs. Select the appropriate PID for testing, then press trigger.

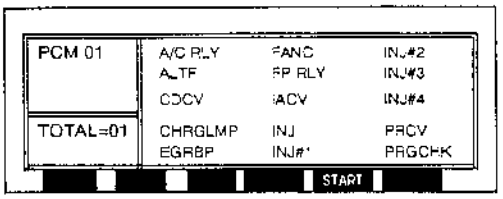

X5U101WD9

5. Press **START**.

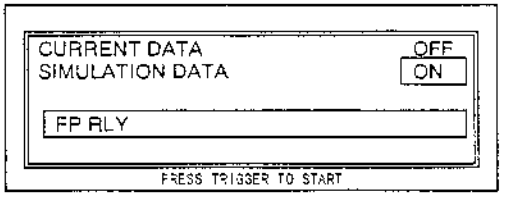

X5U101WDA

6. Press trigger key.
7. The simulation is performed **for 3 seconds**, and a "**SIMULATION ACTIVATED PLEASE WAIT**" message is displayed during those 3 seconds.

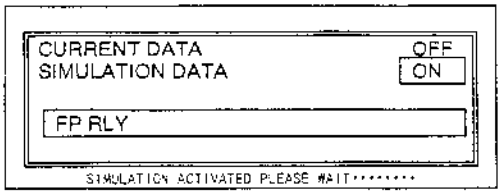

X5U101WDB

8. To perform the simulation again, press the trigger key. To exit the ignition on test, press the cancel key.

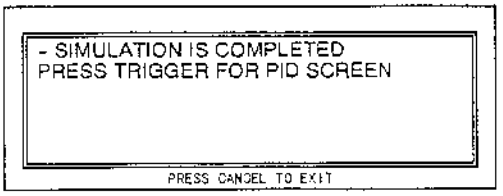

X5U101WDC

After repair procedure

1. After repairs have been made, perform the **DTCs Reading procedure.**
2. Press **CLEAR.**

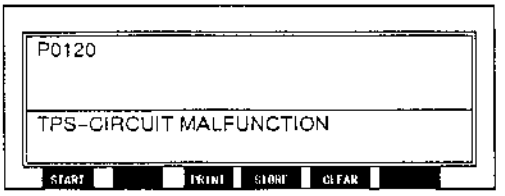

X5U101WDD

3. Press the trigger key.
4. Press the cancel key.
5. Ensure that the customer's concern has been resolved.

OBD II Drive Mode Procedure

Note

- Disconnecting the battery will reset the memory. Do not disconnect the battery during and after this procedure.
- Vehicle speed and engine speed detected by the PCM may differ from that indicated by the speedometer and the tachometer. Check the vehicle speed and engine speed during driving mode by using the NGS tester.
- If the OBD II system check is not completed while the drive mode procedure is carried out, the following cause is guessed.
  1. The OBD II system detects the malfunction.
  2. The drive mode procedure is not completed correctly.

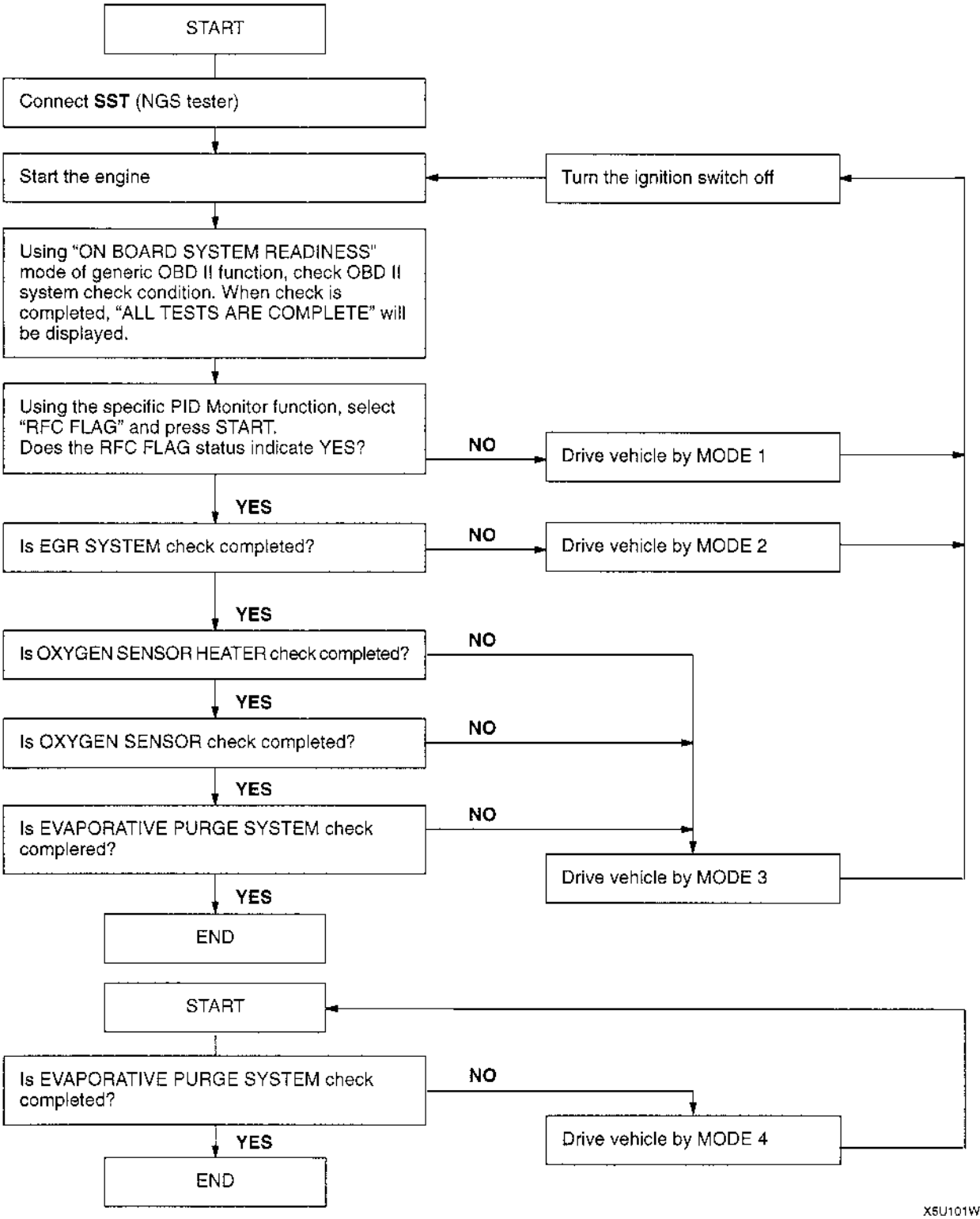

X5U101WA2

MODE 1

1. Start the engine and warm it up completely.
2. Verify that all electrical loads (headlight, blower motor and rear window defroster) and A/C loads are off.
3. Verify that the initial ignition timing and the initial idle speed are within the specification.
4. If not as specified, adjust the ignition timing and idle speed.
5. Verify that terminals TEN and GND of the data link connector are not connected.
6. Carry out no-load racing at the specified speed for each model. Race the engine for more than 15 seconds at each time. Refer to the following engine speed table for engine speed.

Engine speed table

N1 (rpm)	N2 (rpm)
1800—2200	3000—3400

7. Idle the engine for more than 20 seconds with the electric cooling fan stopped.

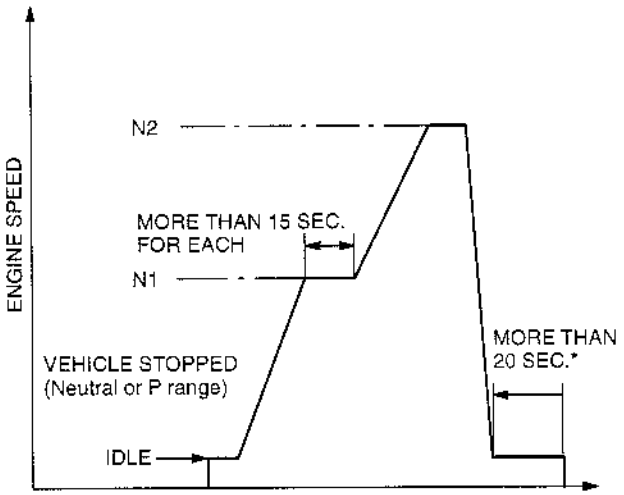

* With electric cooling fan stopped.

X5U101WA3

MODE 2

1. Start the engine and warm it up completely.
2. Verify that all electrical loads (headlight, blower motor and rear window defroster) and A/C load are off.

   Note
   - Driving mode before the constant speed driving is not specified.

3. Drive the vehicle at the constant speed of MT: 52—58 km/h {32.24—35.96 mph}, AT: 51—57 km/h {31.62—35.34 mph} for 60 seconds. (MT: 5th gear, AT: D range)

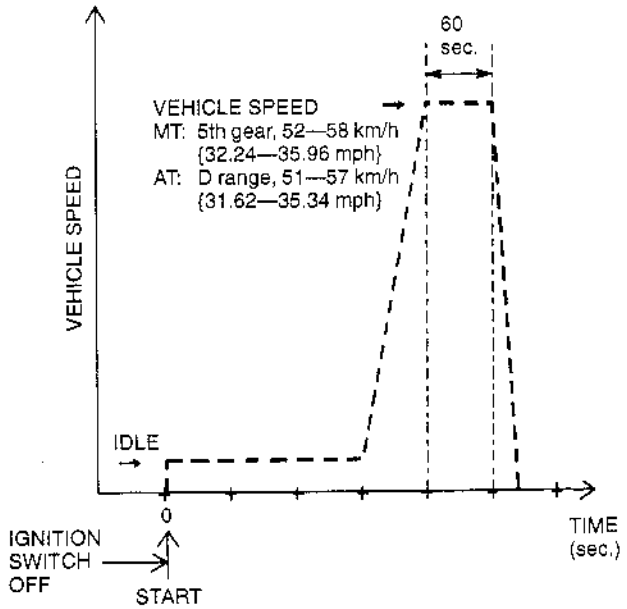

X5U101WA4

MODE 3

1. Start the engine and warm it up completely.
2. Verify that all electrical loads (headlight, blower motor and rear window defroster) and A/C load are off.
3. Drive the vehicle at the constant speed of above 40 km/h {24.8 mph} for 60 seconds after the above 300 seconds from engine start. (MT: 5th gear, AT: D range)
4. Drive the vehicle at the constant speed 35—55 km/h {21.7—34.1 mph} for 180 seconds. (MT: 5th gear, AT: D range)

   Note
   - Driving mode before the constant speed driving is not specified.

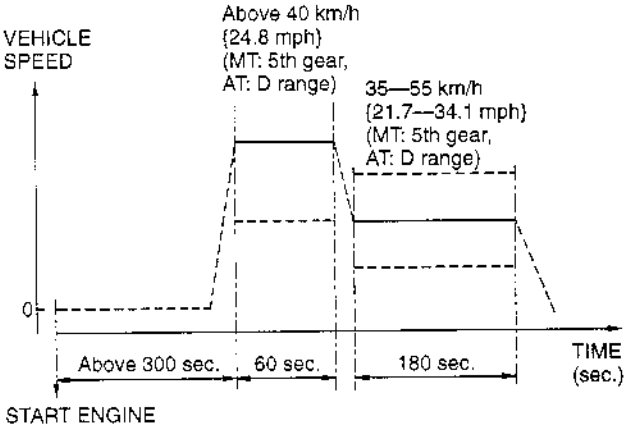

X5U101WA5

MODE 4

1. Verify that all following conditions are satisfied.
   - Engine coolant temperature is 0—30 °C {32—86 °F}.
   - Intake air temperature is 10—60 °C {50—140 °F}.
   - Barometric pressure is 72.0 kPa {540 mmHg, 21.3 inHg} or higher.
   - Fuel gauge needle points within 15—85%.
2. Start the engine and race it at 3,500 rpm for 200 seconds to warm it up completely.
3. Within 240 seconds after engine start, start the vehicle and accelerate to 65—96 km/h {40—60 mph} in approximately 20 seconds.
4. Drive the vehicle at the constant speed of 65—96 km/h {40—60 mph} till 360 seconds after engine start.

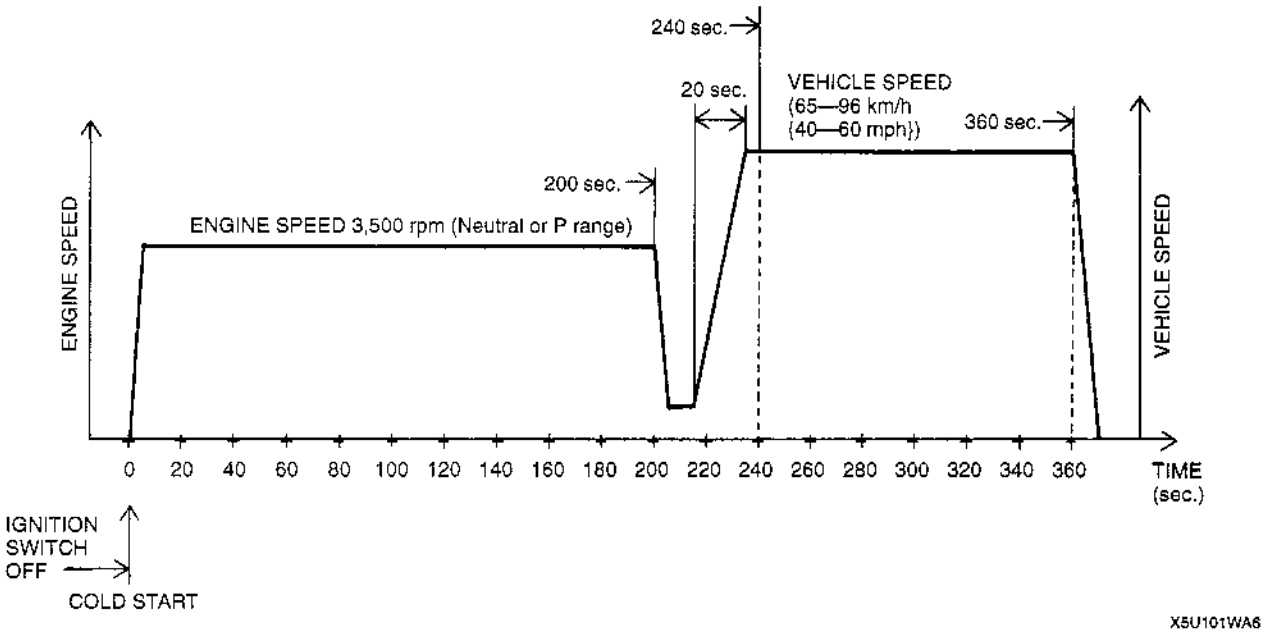

Failure Indication Function
Diagnostic trouble codes table

○: Applied ×: Not applied

DTC No.	Condition	MIL	DC	*1Monitor item	Memory function
P0102	Mass air flow circuit low input	ON	1	CCM	○
P0103	Mass air flow circuit high input	ON	1	CCM	○
P0106	Barometric pressure circuit performance problem	ON	2	CCM	○
P0107	Barometric pressure circuit low input	ON	1	CCM	○
P0108	Barometric pressure circuit high input	ON	1	CCM	○
P0111	Intake air temperature circuit performance problem	ON	2	CCM	○
P0112	Intake air temperature circuit low input	ON	1	CCM	○
P0113	Intake air temperature circuit high input	ON	1	CCM	○
P0117	Engine coolant temperature circuit low input	ON	1	CCM	○
P0118	Engine coolant temperature circuit high input	ON	1	CCM	○
P0122	Throttle position circuit low input	ON	1	CCM	○
P0123	Throttle position circuit high input	ON	1	CCM	○
P0125	Excessive time to enter closed loop fuel control	ON	2	CCM	○
P0130	Front heated oxygen sensor circuit malfunction	ON	2	O2 sensor	○
P0134	Front heated oxygen sensor circuit no activity detected	ON	2	CCM	○
P0138	Rear heated oxygen sensor circuit high input	ON	2	CCM	○
P0140	Rear heated oxygen sensor circuit no activity detected	ON	2	CCM	×
P0171	Fuel trim system too lean	ON	2	Fuel	○
P0172	Fuel trim system too rich	ON	2	Fuel	○
P0300	Random misfire detected	Flashing or ON	1 or 2	Misfire	○
P0301	Cylinder 1 misfire detected	Flashing or ON	1 or 2	Misfire	○
P0302	Cylinder 2 misfire detected	Flashing or ON	1 or 2	Misfire	○
P0303	Cylinder 3 misfire detected	Flashing or ON	1 or 2	Misfire	○
P0304	Cylinder 4 misfire detected	Flashing or ON	1 or 2	Misfire	○
P0325	Knock sensor circuit malfunction	ON	1	CCM	○
P0335	Crankshaft position sensor circuit malfunction	ON	1	CCM	○
P0339	Crankshaft position sensor circuit intermittent	ON	2	CCM	○
P0401	Exhaust gas recirculation flow insufficient detected	ON	2	EGR	○
P0402	Exhaust gas recirculation flow excessive detected	ON	2	EGR	○
*3P0420	Warm up catalyst system efficiency below threshold	ON	2	Catalyst	○
*2P0421	Warm up catalyst system efficiency below threshold	ON	2	Catalyst	○
P0422	Evaporative emission control system malfunction (Leak check)	ON	2	Evaporative	○
P0443	Evaporative emission control system purge control valve circuit malfunction (Equip leak check)	OFF	*1	*4Other	×
P0446	Evaporative emission control system malfunction (vent control malfunction)	ON	2	CCM	○
P0452	Evaporative emission control system pressure sensor low input	ON	2	CCM	○

DTC No.	Condition	MIL	DC	*1Monitor item	Memory function
P0453	Evaporative emission control system pressure sensor high input	ON	2	CCM	○
P0455	Evaporative emission control system malfunction (con. leak detected)	ON	2	Evaporative	○
P0461	Fuel level sensor circuit range/performance	ON	2	CCM	○
P0462	Fuel level sensor circuit low input	ON	2	CCM	○
P0463	Fuel level sensor circuit high input	ON	2	CCM	○
P0500	Vehicle speed sensor malfunction	ON	2	CCM	○
P0506	Idle control system RPM lower than expected	ON	2	CCM	○
P0507	Idle control system RPM higher than expected	ON	2	CCM	○
P0550	P/S pressure switch circuit malfunction	ON	2	CCM	○
P0703	Brake switch input malfunction	ON	2	CCM	○
P0704	Clutch switch input circuit malfunction	ON	2	CCM	○
P0705	Transmission range switch circuit malfunction (AT)	☞ 05–01 AUTOMATIC TRANSMISSION ON-BOARD DIAGNOSTIC			
	Neutral switch circuit malfunction (MT)	ON	2	CCM	○
P0706	Transmission range switch circuit malfunction (Open circuit)	☞ 05–01 AUTOMATIC TRANSMISSION ON-BOARD DIAGNOSTIC			
P0715	Input/turbine speed sensor circuit malfunction	☞ 05–01 AUTOMATIC TRANSMISSION ON-BOARD DIAGNOSTIC			
P0720	Output speed sensor circuit malfunction	☞ 05–01 AUTOMATIC TRANSMISSION ON-BOARD DIAGNOSTIC			
P0725	Engine speed input circuit malfunction	☞ 05–01 AUTOMATIC TRANSMISSION ON-BOARD DIAGNOSTIC			
P0741	Torque converter clutch control solenoid valve stuck off	☞ 05–01 AUTOMATIC TRANSMISSION ON-BOARD DIAGNOSTIC			
P0742	Torque converter clutch control solenoid valve stuck on	☞ 05–01 AUTOMATIC TRANSMISSION ON-BOARD DIAGNOSTIC			
P1751	Shift solenoid A circuit open	☞ 05–01 AUTOMATIC TRANSMISSION ON-BOARD DIAGNOSTIC			
P1752	Shift solenoid A circuit short	☞ 05–01 AUTOMATIC TRANSMISSION ON-BOARD DIAGNOSTIC			
P0751	Shift solenoid A stuck off	☞ 05–01 AUTOMATIC TRANSMISSION ON-BOARD DIAGNOSTIC			
P0752	Shift solenoid A stuck on	☞ 05–01 AUTOMATIC TRANSMISSION ON-BOARD DIAGNOSTIC			
P1756	Shift solenoid B circuit open	☞ 05–01 AUTOMATIC TRANSMISSION ON-BOARD DIAGNOSTIC			
P1757	Shift solenoid B circuit short	☞ 05–01 AUTOMATIC TRANSMISSION ON-BOARD DIAGNOSTIC			
P0756	Shift solenoid B stuck off	☞ 05–01 AUTOMATIC TRANSMISSION ON-BOARD DIAGNOSTIC			
P0757	Shift solenoid B stuck on	☞ 05–01 AUTOMATIC TRANSMISSION ON-BOARD DIAGNOSTIC			
P1102	Mass air flow inconsinstent with throttle position sensor (Lower than expected)	ON	2	CCM	○
P1103	Mass air flow inconsinstent with RPM (Greater than expected)	ON	2	CCM	○
P1122	Throttle position CLOSE stuck	ON	2	CCM	○
P1123	Throttle position OPEN stuck	ON	2	CCM	○
P1135	Front heated oxygen sensor heater circuit low	ON	2	O2 sensor heater	○
P1136	Front heated oxygen sensor heater circuit high	ON	2	O2 sensor heater	○
P1141	Rear heated oxygen sensor heater circuit low	ON	2	O2 sensor heater	×

DTC No.	Condition	MIL	DC	*1Monitor item	Memory function
P1142	Rear heated oxygen sensor heater circuit high	ON	2	O2 sensor heater	×
P1170	Front inversion heated oxygen sensor	ON	2	CCM	○
P1345	No SGC signal	ON	1	CCM	○
P1449	Canister drain cut valve (CDCV) open or short	OFF	*1	*4Other	×
P1450	Evaporative emission control system malfunction	ON	2	CCM	○
P1487	EGR boost sensor solenoid valve open or short	OFF	*1	*4Other	×
P1496	EGR valve motor coil 1 open or short	OFF	*1	*4Other	×
P1497	EGR valve motor coil 2 open or short	OFF	*1	*4Other	×
P1498	EGR valve motor coil 3 open or short	OFF	*1	*4Other	×
P1499	EGR valve motor coil 4 open or short	OFF	*1	*4Other	×
P1504	Idle air control circuit malfunction	ON	1	CCM	○
P1523	VICS circuit malfunction	OFF	*1	*4Other	×
P1562	PCM +BB voltage low	ON	1	CCM	○
P1601	PCM–TCM communication line error (AT)	ON	1	CCM	○
P1608	PCM internal circuit malfunction	OFF	*1	*4Other	×
P1609	PCM internal circuit malfunction (Knock sensor circuit)	OFF	1	*4Other	○
P1631	Generator output voltage signal no electricity	OFF	1	*4Other	○
P1632	Battery voltage monitor signal circuit malfunction	OFF	1	*4Other	○
P1633	Battery overcharge	OFF	1	*4Other	○
P1634	Generator terminal B circuit open	OFF	1	*4Other	○
P1740	Torque converter clutch control solenoid valve open	☞ 05–01 AUTOMATIC TRANSMISSION ON-BOARD DIAGNOSTIC			
P1742	Torque converter clutch control solenoid valve short	☞ 05–01 AUTOMATIC TRANSMISSION ON-BOARD DIAGNOSTIC			
P1771	Throttle position sensor open	☞ 05–01 AUTOMATIC TRANSMISSION ON-BOARD DIAGNOSTIC			
P1772	Throttle position sensor short	☞ 05–01 AUTOMATIC TRANSMISSION ON-BOARD DIAGNOSTIC			

* : Detected when ignition switch is ON. (Engine stopped.)

*1 : Indicates the applicable item in On-Board System Readiness Tests defined by CARB.

*2 : CALIFORNIA emission regulations applicable model.

*3 : Except CALIFORNIA emission regulations applicable model.

*4 : Indicates the DTC set originally by Mazda (other than On-Board System Readiness Tests defined by CARB).

Diagnostic Trouble Code Troubleshooting

DTC P0102	Mass air flow circuit low input
DETECTION CONDITION	• Input voltage from mass air flow sensor is below 0.86 V when time from engine started is 3 seconds
POSSIBLE CAUSE	• Mass air flow sensor malfunction • Open or short circuit in wiring from main relay terminal D to mass air flow sensor terminal C • Open or short circuit in wiring from PCM terminal 2L to mass air flow sensor terminal B • Open circuit in wiring from PCM terminal 3C to mass air flow sensor terminal A

STEP	INSPECTION		ACTION
1	Has FREEZE FRAME PID DATA been recorded?	Yes	Go to next step.
		No	Record FREEZE FRAME PID DATA on repair order, then go to next step.
2	Does mass air flow sensor connector or PCM connector have poor connection?	Yes	Repair or replace connector, then go to step 9.
		No	Go to next step.
3	Implement PID/DATA MONITOR AND RECORD (MAF V) of DIAGNOSTIC DATA LINK by using NGS. Is the voltage as specified?	Yes	Go to step 6.
		No	Check for open circuit in wiring harness. (PCM terminal 2L — Mass air flow sensor terminal B), then go to step 9.
4	Disconnect mass air flow sensor connector. Turn ignition switch to ON. Is there battery positive voltage at connector terminal C?	Yes	Go to next step.
		No	Check for open or short circuit in wiring harness. (Main relay terminal D — Mass air flow sensor terminal C), then go to step 9.
5	Is there continuity between connector terminal A and PCM terminal 3C?	Yes	Go to next step.
		No	Repair or replace wiring harness, then go to step 8.
6	Is mass air flow sensor okay?	Yes	Go to next step.
		No	Replace mass air flow sensor, then go to step 8.
7	Clear diagnostic trouble code from memory. Is same code No. present after performing After repair procedure?	Yes	Get assistance from technical Hotline/your distributor, then replace PCM if necessary.
		No	Intermittent poor connection of harness or connector (Repair connector and/or harness), then go to next step.
8	Clear diagnostic trouble code from memory. Is there any diagnostic trouble code present after performing "After Repair Procedure"?	Yes	Go to applicable DTC inspection.
		No	Troubleshooting completed.

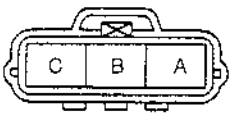

HARNESS SIDE CONNECTOR
(VIEW FROM TERMINAL CONNECTOR)

X5U101WDE

DTC P0103	Mass air flow circuit high input
DETECTION CONDITION	• Input voltage from mass air flow sensor is above 4.9 V when time from engine started is 3 seconds
POSSIBLE CAUSE	• Mass air flow sensor malfunction (short) • Open or short circuit in wiring from PCM terminal 2L to mass air flow sensor terminal B

STEP	INSPECTION		ACTION
1	Has FREEZE FRAME PID DATA been recorded?	Yes	Go to next step.
		No	Record FREEZE FRAME PID DATA on repair order, then go to next step.
2	Does mass air flow sensor connector or PCM connector have poor connection?	Yes	Repair or replace connector, then go to step 7.
		No	Go to next step.
3	Implement PID/DATA MONITOR AND RECORD (MAF V) of DIAGNOSTIC DATA LINK by using NGS. Is the voltage as specified?	Yes	Go to step 5.
		No	Go to next step.

STEP	INSPECTION		ACTION
4	Is there continuity between connector terminal B and PCM terminal 2L?	Yes	Go to next step.
		No	Repair or replace wiring harness, then go to step 7.
5	Is mass air flow sensor okay?	Yes	Go to next step.
		No	Replace mass air flow sensor, then go to step 7.
6	Clear diagnostic trouble code from memory. Is same code No. present after performing "After Repair Procedure"?	Yes	Get assistance from technical Hotline/your distributor, then replace PCM if necessary.
		No	Intermittent poor connection of harness or connector (Repair connector and/or harness), then go to next step.
7	Clear diagnostic trouble code from memory. Is there any diagnostic trouble code present after performing "After Repair Procedure"?	Yes	Go to applicable DTC inspection.
		No	Troubleshooting completed.

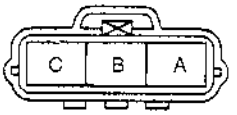

HARNESS SIDE CONNECTOR
(VIEW FROM TERMINAL CONNECTOR)

X5U101WDF

DTC P0106	Barometric pressure circuit performance problem
DETECTION CONDITION	• Barometric pressure variation in specified condition is less than 4.45 kPa {33.4 mmHg, 1.31 inHg}
POSSIBLE CAUSE	• EGR boost sensor malfunction • EGR boost sensor vacuum hose loosed, damaged and clogged • EGR boost sensor solenoid valve malfunction • Open or short circuit in wiring from EGR boost sensor terminal B to PCM terminal 3S • Open or short circuit in wiring from EGR boost sensor terminal C to PCM terminal 2I • Open or short circuit in wiring from EGR boost sensor terminal A to PCM terminal 3F • Open or short circuit in wiring from EGR boost sensor solenoid valve terminal A to main relay terminal D • Open or short circuit in wiring from EGR boost sensor solenoid valve terminal B to PCM terminal 3T

STEP	INSPECTION		ACTION
1	Has FREEZE FRAME PID DATA been recorded?	Yes	Go to next step.
		No	Record FREEZE FRAME PID DATA on repair order, then go to next step.
2	Does EGR boost sensor connector, EGR boost sensor solenoid valve connector or PCM connector have poor connection?	Yes	Repair or replace connector, then go to step 13.
		No	Go to next step.
3	Does connection of EGR boost vacuum hose have loose, damage and/or clog?	Yes	Repair or replace EGR boost sensor vacuum hose, then go to step 13.
		No	Go to next step.
4	Implement PID/DATA MONITOR RECORD (BARO V) of DIAGNOSTIC DATA LINK by using NGS tester. Is operation as specified?	Yes	Go to step 7.
		No	Go to next step.
5	Disconnect EGR boost sensor connector. Turn ignition switch to ON. Is there 5 V at harness connector terminal C?	Yes	Go to next step.
		No	Check for open or short circuit in wiring harness, then go to step (PCM terminal 2I — EGR boost sensor terminal C), then go to step 13.
6	Is there continuity between connector terminal A and PCM terminal 3F?	Yes	Go to next step.
		No	Repair or replace wiring harness, then go to step 13.
7	Is there continuity between connector terminal B and PCM terminal 3S?	Yes	Go to next step.
		No	Repair or replace wiring harness, then go to step 13.
8	Is EGR boost sensor okay? ☞ 01–40 EGR BOOST SENSOR INSPECTION	Yes	Go to next step.
		No	Repair or replace EGR boost sensor, then go to step 13.

STEP	INSPECTION		ACTION
9	Disconnect EGR boost sensor solenoid connector. Turn ignition switch to ON. Is there 5 V at harness connector terminal A?	Yes	Go to next step.
		No	Check for open or short circuit in wiring harness, then go to step (Main relay terminal D — EGR boost sensor solenoid valve connector terminal A), then go to step 13.
10	Is there continuity between connector terminal B and PCM terminal 3T?	Yes	Go to next step.
		No	Repair or replace wiring harness, then go to step 13.
11	Is EGR boost sensor solenoid valve okay? ☞ 01–16 EGR BOOST SENSOR SOLENOID VALVE INSPECTION	Yes	Go to next step.
		No	Replace EGR boost sensor solenoid valve, then go to step 13.
12	Clear diagnostic trouble code from memory. Is same code No. present after performing "After Repair Procedure"?	Yes	Get assistance from Technical Hotline/your distributor, then replace PCM if necessary.
		No	Intermittent poor connection in harness or connector. Repair connector and/or harness, then go to next step.
13	Clear diagnostic trouble code from memory. Is there any diagnostic trouble code present after performing "After Repair Procedure"?	Yes	Go to applicable DTC inspection.
		No	Troubleshooting completed.

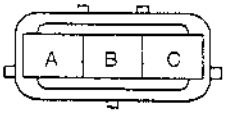

HARNESS SIDE CONNECTOR
(VIEW FROM TERMINAL CONNECTOR)

X8U10-WDG

DTC P0107	Barometric pressure circuit low input
DETECTION CONDITION	• Input voltage from EGR boost sensor is below 0.2 V
POSSIBLE CAUSE	• EGR boost sensor malfunction • Open or short circuit in wiring from EGR boost sensor terminal B to PCM terminal 3S • Open or short circuit in wiring from EGR boost sensor terminal C to PCM terminal 2I • Short circuit in wiring from EGR boost sensor terminal A to PCM terminal 3F

STEP	INSPECTION		ACTION
1	Has FREEZE FRAME PID DATA been recorded?	Yes	Go to next step.
		No	Record FREEZE FRAME PID DATA on repair order, then go to next step.
2	Does EGR boost sensor connector and PCM connector have poor connection?	Yes	Repair or replace connector, then go to step 9.
		No	Go to next step.
3	Implement PID/DATA MONITOR RECORD (BARO V) of DIAGNOSTIC DATA LINK by using NGS tester. Is voltage specified?	Yes	Go to step 9.
		No	Go to next step.
4	Disconnect EGR boost sensor connector. Is there 5 V at connector terminal C?	Yes	Go to next step.
		No	Check for open or short circuit in wiring harness, then go to step 9. (PCM terminal 2I — EGR boost sensor terminal C)
5	Is there continuity between connector terminal A and PCM terminal 3F?	Yes	Go to next step.
		No	Repair or replace wiring harness, then go to step 9.
6	Is there continuity between connector terminal B and PCM terminal 3S?	Yes	Go to next step.
		No	Repair or replace wiring harness, then go to step 9.
7	Is EGR boost sensor okay? ☞ 01–40 EGR BOOST SENSOR INSPECTION	Yes	Go to next step.
		No	Replace EGR boost sensor, then go to step 9.
8	Clear diagnostic trouble code from memory. Is same code No. present after performing "After Repair Procedure"?	Yes	Get assistance from Technical Hotline/your distributor, then replace PCM if necessary.
		No	Intermittent poor connection in harness or connector. Repair connector and/or harness, then go to next step.

STEP	INSPECTION		ACTION
9	Clear diagnostic trouble code from memory. Is there any diagnostic trouble code after performing "After Repair Procedure"?	Yes	Go to applicable DTC inspection.
		No	Troubleshooting completed.

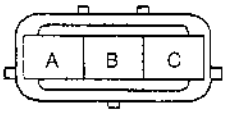

HARNESS SIDE CONNECTOR
(VIEW FROM TERMINAL CONNECTOR)

X5U10WDH

DTC P0108	Barometric pressure circuit high input
DETECTION CONDITION	• Input voltage from EGR boost sensor (Barometric pressure) is above 4.79 V
POSSIBLE CAUSE	• EGR boost sensor malfunction • Short circuit in wiring from EGR boost sensor terminal B to PCM terminal 3S • Short circuit in wiring from EGR boost sensor terminal C to PCM terminal 2I • Open circuit in wiring from EGR boost sensor terminal A to PCM terminal 3F

STEP	INSPECTION		ACTION
1	Has FREEZE FRAME PID DATA been recorded?	Yes	Go to next step.
		No	Record FREEZE FRAME PID DATA on repair order, then go to next step.
2	Does EGR boost sensor connector and PCM connector have poor connection?	Yes	Repair or replace connector, then go to step 9.
		No	Go to next step.
3	Implement PID/DATA MONITOR RECORD (BARO V) of DIAGNOSTIC DATA LINK by using NGS tester.	Yes	Go to step 9.
		No	Go to next step.
4	Disconnect EGR boost sensor connector. Is there 5 V at connector terminal C?	Yes	Go to next step.
		No	Check for short circuit in wiring harness, then go to step 9. (PCM terminal 2I — EGR boost sensor terminal C)
5	Is there continuity between connector terminal A and PCM terminal 3F?	Yes	Go to next step.
		No	Repair or replace wiring harness, then go to step 9.
6	Is there continuity between connector terminal B and PCM terminal 3S?	Yes	Go to next step.
		No	Repair or replace wiring harness, then go to step 9.
7	Is EGR boost sensor okay? ☞ 01–40 EGR BOOST SENSOR INSPECTION	Yes	Go to next step.
		No	Replace EGR boost sensor, then go to step 9.
8	Clear diagnostic trouble code from memory. Is same code No. present after performing "After Repair Procedure"?	Yes	Get assistance from Technical Hotline/your distributor, then replace PCM if necessary.
		No	Intermittent poor connection in harness or connector. Repair connector and/or harness, then go to next step.
9	Clear diagnostic trouble code from memory. Is there any diagnostic trouble code after performing "After Repair Procedure"?	Yes	Go to applicable DTC inspection.
		No	Troubleshooting completed.

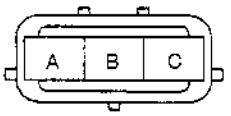

HARNESS SIDE CONNECTOR
(VIEW FROM TERMINAL CONNECTOR)

X5U10WDI

DTC P0111	Intake air temperature circuit performance problem
DETECTION CONDITION	• Intake air temperature is higher than engine coolant temperature by 40 °C {104 °F}
POSSIBLE CAUSE	• Intake air temperature sensor malfunction or substandard performance • Engine coolant temperature sensor malfunction or substandard performance • Open or short circuit in wiring from intake air temperature sensor terminal B to PCM terminal 2B • Open or short circuit in wiring from engine coolant temperature sensor terminal A to PCM terminal 2E • Open circuit in wiring from intake air temperature sensor terminal A to PCM terminal 3F • Open circuit in wiring from engine coolant temperature sensor terminal B to PCM terminal 3F

STEP	INSPECTION		ACTION
1	Have FREEZE FRAME PID DATA been recorded?	Yes	Go to next step.
		No	Record FREEZE FRAME PID DATA on repair order, then go to next step.
2	Do intake air temperature sensor connector, engine coolant temperature sensor connector and PCM connector have poor connection?	Yes	Repair or replace connector, then go to step 7.
		No	Go to next step.
3	Verify stored DTC. Have DTCs P0112, P0113, P0117 and/or P0118 been stored?	Yes	Inspect and repair DTC P0112, P0113, P0117 or P0118, then go to step 7.
		No	Go to next step.
4	Measure and record the temperature around the intake-air temperature sensor. Implement PID/DATA MONITOR and RECORD (IAT) of DIAGNOSTIC DATA LINK by using NGS. Does the recorded temperature correspond with IAT valve?	Yes	Go to next step.
		No	Inspect intake air temperature sensor, then go to step 7.
5	Verify engine is cool condition. Implement PID/DATA MONITOR AND RECORD (ECT) of DIAGNOSTIC DATA LINK by using NGS. Does "ECT" value increase (above 60 °C {140 °F}) when the engine is warmed up to normal operating temperature.	Yes	Go to next step.
		No	Inspect engine coolant temperature sensor, then go to step 7.
6	Clear diagnostic trouble code from memory. Is same code No. present after performing "After Repair Procedure"?	Yes	Get assistance from Technical Hotline, then replace PCM if necessary.
		No	Intermittent poor connection in harness or connector. Repair connector and/or harness, then go to next step.
7	Clear diagnostic trouble code from memory. Is there a diagnostic trouble code present after performing "After Repair Procedure"?	Yes	Go to applicable DTC inspection.
		No	Troubleshooting completed.

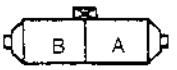

HARNESS SIDE CONNECTOR
(VIEW FROM TERMINAL CONNECTOR)

X5U101WEC

DTC P0112	Intake air temperature circuit low input
DETECTION CONDITION	• Input voltage from intake air temperature sensor is below 0.16 V when engine is started
POSSIBLE CAUSE	• Intake air temperature sensor malfunction • Short circuit in wiring from intake air temperature sensor terminal B to PCM terminal 2B • Short circuit in wiring from intake air temperature sensor terminal A to PCM terminal 3F

STEP	INSPECTION		ACTION
1	Has FREEZE FRAME PID DATA been recorded?	Yes	Go to next step.
		No	Record FREEZE FRAME PID DATA on repair order, then go to next step.
2	Does mass air flow sensor connector or PCM connector have poor connection?	Yes	Repair or replace connector, then go to step 8.
		No	Go to next step.

STEP	INSPECTION		ACTION
3	Implement PID/DATA MONITOR AND RECORD (IAT V) of DIAGNOSTIC DATA LINK by using NGS. Is the voltage as specified?	Yes	Go to step 7.
		No	Go to next step.
4	Disconnect intake air temperature sensor connector. Turn ignition switch to ON. Is there 5 V at connector terminal B?	Yes	Go to next step.
		No	Check for open or short circuit in wiring harness. (PCM terminal 2B — intake air temperature sensor terminal B, then go to step 8.)
5	Is there continuity between connector terminal B and PCM terminal 3F?	Yes	Go to next step.
		No	Repair or replace wiring harness, then go to step 8.
6	Is intake air temperature sensor okay? ☞ 01–40 INTAKE AIR TEMPERATURE SENSOR INSPECTION	Yes	Go to next step.
		No	Replace intake air temperature sensor, then go to step 8.
7	Clear diagnostic trouble code from memory. Is same code No. present after performing "After Repair Procedure"?	Yes	Get assistance from technical Hotline/your distributor, then replace PCM if necessary.
		No	Intermittent poor connection of harness of connector (Repair connector and/or harness), then go to next step.
8	Clear diagnostic trouble code from memory. Is there any diagnostic trouble code present after performing "After Repair Procedure"?	Yes	Go to applicable DTC inspection.
		No	Troubleshooting completed.

HARNESS SIDE CONNECTOR
(VIEW FROM TERMINAL CONNECTOR)

X5U101WDJ

DTC P0113	Intake air temperature circuit high input
DETECTION CONDITION	• Input voltage from intake air temperature sensor is above 4.84 V when engine is started
POSSIBLE CAUSE	• Intake air temperature sensor malfunction • Open circuit in wiring from intake air temperature sensor terminal A to ECM terminal 3F • Open circuit in wiring from intake air temperature sensor terminal B to ECM terminal 2B

STEP	INSPECTION		ACTION
1	Has FREEZE FRAME PID DATA been recorded?	Yes	Go to next step.
		No	Record FREEZE FRAME PID DATA on repair order, then go to next step.
2	Does mass air flow sensor connector or PCM connector have poor connection?	Yes	Repair or replace connector, then go to step 8.
		No	Go to next step.
3	Implement PID/DATA MONITOR AND RECORD (IAT V) of DIAGNOSTIC DATA LINK by using NGS. Is the voltage as specified?	Yes	Go to step 8.
		No	Go to next step.
4	Disconnect intake air temperature sensor connector. Turn ignition switch to ON. Is there 5 V at connector terminal B?	Yes	Go to next step.
		No	Check for open or short circuit in wiring harness. (PCM terminal 2B — Mass air flow sensor terminal B, then go to step 8.)
5	Is there continuity between connector terminal A and PCM terminal 3F?	Yes	Go to next step.
		No	Repair or replace wiring harness, then go to step 8.
6	Is intake air temperature sensor okay? ☞ 01–40 INTAKE AIR TEMPERATURE SENSOR INSPECTION	Yes	Go to next step.
		No	Replace intake air temperature sensor, then go to step 8.
7	Clear diagnostic trouble code from memory. Is same code No. present after performing "After Repair Procedure"?	Yes	Get assistance from technical Hotline/your distributor, then replace PCM if necessary.
		No	Intermittent poor connection of harness of connector (Repair connector and/or harness), then go to next step.

STEP	INSPECTION		ACTION
8	Clear diagnostic trouble code from memory. Is there any diagnostic trouble code present after performing "After Repair Procedure"?	Yes	Go to applicable DTC inspection.
		No	Troubleshooting completed.

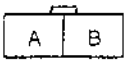

HARNESS SIDE CONNECTOR
(VIEW FROM TERMINAL CONNECTOR)

X5U101WDK

DTC P0117	Engine coolant temperature circuit low input
DETECTION CONDITION	• Input voltage from engine coolant temperature sensor is below 0.2 V when ignition switch is turned ON
POSSIBLE CAUSE	• Engine coolant temperature sensor malfunction • Short circuit in wiring from engine coolant temperature sensor terminal A to PCM terminal 2E • Short circuit in wiring from engine coolant temperature sensor terminal B to PCM terminal 3F

STEP	INSPECTION		ACTION
1	Has FREEZE FRAME PID DATA been recorded?	Yes	Go to next step.
		No	Record FREEZE FRAME PID DATA on repair order, then go to next step.
2	Does engine coolant temperature sensor connector and PCM connector have poor connection?	Yes	Repair or replace connector, then go to step 8.
		No	Go to next step.
3	Implement PID/DATA MONITOR RECORD (ECT V) of DIAGNOSTIC DATA LINK by using NGS tester. Is voltage as specified?	Yes	Go to step 8.
		No	Go to next step.
4	Disconnect engine coolant temperature sensor connector. Turn ignition switch ON. Is there 5 V at connector terminal A?	Yes	Go to next step.
		No	Check for open or short circuit in wiring harness. (PCM terminal 2E — Engine coolant temperature sensor terminal A)
5	Is there continuity between connector terminal B and PCM terminal 3F?	Yes	Go to next step.
		No	Repair or replace wiring harness, then go to step 8.
6	Is resistance between engine coolant temperature sensor terminal A and B as specified? ☞ 01–40 ENGINE COOLANT TEMPERATURE SENSOR INSPECTION	Yes	Go to next step.
		No	Replace engine coolant temperature sensor, then go to step 8.
7	Clear diagnostic trouble code from memory. Is same code No. present after performing "After Repair Procedure"?	Yes	Get assistance from Technical Hotline/your distributor, then replace PCM if necessary.
		No	Intermittent poor connection of harness or connector. Repair connector and/or harness, then go to next step.
8	Clear diagnostic trouble code from memory. Is there any diagnostic trouble code present after performing "After Repair Procedure"?	Yes	Go to applicable DTC inspection.
		No	Troubleshooting completed.

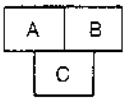

HARNESS SIDE CONNECTOR
(VIEW FROM TERMINAL CONNECTOR)

X5U101WDL

DTC P0118	Engine coolant temperature circuit high input
DETECTION CONDITION	• Input voltage from engine coolant temperature sensor is above 4.9 V when ignition switch is turned ON
POSSIBLE CAUSE	• Engine coolant temperature sensor malfunction • Open circuit in wiring from engine coolant temperature sensor terminal A to PCM terminal 2E • Open circuit in wiring from engine coolant temperature sensor terminal B to PCM terminal 3F

STEP	INSPECTION		ACTION
1	Has FREEZE FRAME PID DATA been recorded?	Yes	Go to next step.
		No	Record FREEZE FRAME PID DATA on repair order, then go to next step.
2	Does engine coolant temperature sensor connector and PCM connector poor connection?	Yes	Repair or replace connector, then go to step 8.
		No	Go to next step.
3	Implement PID/DATA MONITOR RECORD (ECT V) of DIAGNOSTIC DATA LINK by using NGS tester. Is voltage as specified?	Yes	Go to step 8.
		No	Go to next step.
4	Disconnect engine coolant temperature sensor connector. Turn ignition switch ON. Is there 5 V at connector terminal A?	Yes	Go to next step.
		No	Check for open or short circuit in wiring harness. (PCM terminal 2E — Engine coolant temperature sensor terminal A)
5	Is there continuity between connector terminal B and PCM terminal 3F?	Yes	Go to next step.
		No	Repair or replace wiring harness, then go to step 8.
6	Is resistance between engine coolant temperature sensor terminal A and B as specified? ☞ 01–40 ENGINE COOLANT TEMPERATURE SENSOR INSPECTION	Yes	Go to next step.
		No	Replace engine coolant temperature sensor, then go to step 8.
7	Clear diagnostic trouble code from memory. Is same code No. present after performing "After Repair Procedure"?	Yes	Get assistance from Technical Hotline/your distributor, then replace PCM if necessary.
		No	Intermittent poor connection of harness or connector. Repair connector and/or harness, then go to next step.
8	Clear diagnostic trouble code from memory. Is there any diagnostic trouble code present after performing "After Repair Procedure"?	Yes	Go to applicable DTC inspection.
		No	Troubleshooting completed.

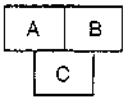

HARNESS SIDE CONNECTOR
(VIEW FROM TERMINAL CONNECTOR)

X5U101WDM

DTC P0122	Throttle position circuit low input
DETECTION CONDITION	• Input voltage from throttle position sensor is below 0.1 V when ignition switch is turned ON
POSSIBLE CAUSE	• Throttle position sensor malfunction • Open or short circuit in wiring from throttle position sensor terminal A to PCM terminal 2I • Short circuit in wiring from throttle position sensor terminal C to PCM terminal 3E

STEP	INSPECTION		ACTION
1	Has FREEZE FRAME PID DATA been recorded?	Yes	Go to next step.
		No	Record FREEZE FRAME PID DATA on repair order, then go to next step.
2	Does throttle position sensor connector or PCM connector have poor connection?	Yes	Repair or replace connector, then go to step 8.
		No	Go to next step.
3	Implement PID/DATA MONITOR AND RECORD (TP V) of DIAGNOSTIC DATA LINK by using NGS. Is the voltage as specified?	Yes	Go to next step.
		No	Go to step 5.

STEP	INSPECTION		ACTION
4	Is voltage increase linear according to throttle valve opening angle?	Yes	Go to step 8.
		No	Replace throttle position sensor, then go to step 8.
5	Disconnect throttle position sensor connector. Turn ignition switch to ON. Is there 5 V at connector terminal A?	Yes	Go to next step.
		No	Check for open or short circuit in wiring harness. (PCM terminal 2I — Throttle position sensor terminal A), then go to step 9.
6	Is there continuity between connector terminal C and PCM terminal 3E?	Yes	Check throttle position sensor, then go to next step.
		No	Repair or replace wiring harness, then go to step 8.
7	Clear diagnostic trouble code from memory. Is same code No. present after performing "After Repair Procedure"?	Yes	Get assistance from technical Hotline/your distributor, then replace PCM if necessary.
		No	Intermittent poor connection of harness or connector (Repair connector and/or harness), then go to step 8.
8	Clear diagnostic trouble code from memory. Is there any diagnostic trouble code present after performing "After Repair Procedure"?	Yes	Go to applicable DTC inspection.
		No	Troubleshooting completed.

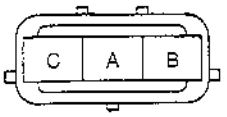

THROTTLE POSITION SENSOR SIDE CONNECTOR

X5U101WDN

DTC P0123	Throttle position circuit high input
DETECTION CONDITION	• Input voltage from throttle position sensor is above 4.8 V when ignition switch is turned ON • Input voltage from throttle position sensor is below 0.37 V when engine coolant temperature is over 80 °C {176 °F} and mass intake airflow amount is above 67 g/sec {2.4 oz/sec} • Input voltage from throttle position sensor is above 1.48 V when engine speed is above 500 rpm and mass intake airflow is below 2.45 g/sec {0.0865 oz/sec}
POSSIBLE CAUSE	• Throttle position sensor malfunction • Open circuit in wiring from throttle position sensor terminal B to PCM terminal 3F • Open circuit in wiring from throttle position sensor terminal C to PCM terminal 3E • Mass air flow sensor malfunction

STEP	INSPECTION		ACTION
1	Has FREEZE FRAME PID DATA been recorded?	Yes	Go to next step.
		No	Record FREEZE FRAME PID DATA on repair order, then go to next step.
2	Does throttle position sensor connector or PCM connector have poor connection?	Yes	Repair or replace connector, then go to step 8.
		No	Go to next step.
3	Implement PID/DATA MONITOR AND RECORD (TP V) of DIAGNOSTIC DATA LINK by using NGS. Is the voltage as specified?	Yes	Go to next step.
		No	Check for open circuit in wiring harness. (PCM terminal 3E — Throttle position sensor terminal C, then go to step 5.)
4	Is voltage increase linear according to throttle valve opening angle?	Yes	Go to step 8.
		No	Replace throttle position sensor, then go to step 8.
5	Is there continuity between connector terminal B and PCM terminal 3F	Yes	Check throttle position sensor, then go to next step.
		No	Repair or replace wiring harness, then go to step 8.
6	Is mass air flow sensor okay? ☞ 01–40 MASS AIR FLOW SENSOR INSPECTION	Yes	Go to next step.
		No	Replace mass air flow sensor, then go to step 8.
7	Clear diagnostic trouble code from memory. Is same code No. present after performing "After Repair Procedure"?	Yes	Get assistance from technical Hotline/your distributor, then replace PCM if necessary.
		No	Intermittent poor connection of harness or connector (Repair connector and/or harness).

STEP	INSPECTION		ACTION
8	Clear diagnostic trouble code from memory. Is there any diagnostic trouble code present after performing "After Repair Procedure"?	Yes	Go to applicable DTC inspection.
		No	Troubleshooting completed.

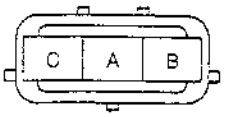

THROTTLE POSITION SENSOR SIDE CONNECTOR

X5U101WDO

DTC P0125	Excessive fuel control time to enter closed loop
DETECTION CONDITION	• Engine coolant temperature will not increase after engine is started and certain period of time is passed
POSSIBLE CAUSE	• Engine coolant temperature sensor malfunction • Thermostat malfunction • Engine coolant fan system malfunction • Water pump malfunction • Engine coolant passage clogged or leaks • Engine coolant level and protection incorrect

STEP	INSPECTION		ACTION
1	Have FREEZE FRAME PID DATA been recorded?	Yes	Go to next step.
		No	Record FREEZE FRAME PID DATA on repair order, then go to next step.
2	Is electrical fan control system okay? ☞ 01–01A ENGINE SYSTEM INSPECTION, Cooling Fan Control System Inspection	Yes	Go to next step.
		No	Repair or replace engine coolant fan system.
3	Is engine coolant temperature sensor resistance okay? ☞ 01–40 ENGINE COOLANT TEMPERATURE SENSOR INSPECTION	Yes	Go to next step.
		No	Replace engine coolant temperature sensor.
4	Is cooling system okay?	Yes	Go to next step.
		No	Repair or replace.
5	Clear diagnostic trouble code from memory. Is same code No. present after performing "After Repair Procedure"?	Yes	Get assistance from Technical Hotline/your distributor, then replace PCM if necessary.
		No	Intermittent poor connection in harness or connector. Repair connector and/or harness, then go to next step.
6	Clear diagnostic trouble code from memory. Is there any diagnostic trouble code present after performing "After Repair Procedure"?	Yes	Go to applicable DTC inspection.
		No	Troubleshooting completed.

DTC P0130	Front heated oxygen sensor circuit malfunction
DETECTION CONDITION	Heated oxygen sensor (front) signal inverses at intervals of 2.67 sec. (MT), 2.90 sec. (AT) or longer while driving in following conditions: • Engine speed 750—3,090 rpm (MT), 810—3,090 rpm (AT) • Vehicle speed over 5.6 km/h {3.5 MPH} • Engine speed variation in 0.51 sec. is less than 670 rpm (MT), 580 rpm (AT) • Charging efficiency variation in 0.51 sec. is less than 50% (MT), 16% (AT) • Input voltage from throttle position sensor variation in 0.51 sec. is less than 0.31 V (MT), 0.16 V (AT)
POSSIBLE CAUSE	• Heated oxygen sensor (front) deterioration • Heated oxygen sensor heater (front) malfunction • Fuel injector malfunction • Pressure regulator malfunction • Pulsation damper malfunction • Fuel pump malfunction • Fuel filter clogged • Fuel delivery hose clogged or leaking • Fuel return hose clogged • Leakage intake-air system • Leakage exhaust system • Positive crankcase ventilation valve malfunction • Purge solenoid valve malfunction • Purge solenoid hoses hooked up incorrectly • Ignition coil malfunction • Ignition control module malfunction • Insufficient compression • Mass air flow sensor malfunction • Engine coolant temperature sensor malfunction • Throttle position sensor malfunction • Vehicle speed sensor malfunction • EGR system malfunction • Open or short circuit in wiring harness • Poor connection of connector • Vacuum hoses damaged or loose **Warning** **The following troubleshooting flow chart contains the fuel system diagnosis and repair procedures. Read the following warnings before performing the fuel system services:** • **Fuel vapor is hazardous. It can easily ignite, causing serious injury and damage. Always keep sparks and flames away from fuel.** • **Fuel line spills and leaks are dangerous. Fuel can ignite and cause serious injuries or death and damage. Fuel can also irritate skin and eyes. To prevent this, always complete "BEFORE REPAIR PROCEDURE" and "AFTER REPAIR PROCEDURE" described in this manual.** **☞ 01–14 BEFORE REPAIR PROCEDURE** **☞ 01–14 AFTER REPAIR PROCEDURE**

STEP	INSPECTION		ACTION
1	Have FREEZE FRAME PID DATA and DIAGNOSTIC MONITORING TEST RESULTS been recorded?	Yes	Go to next step.
		No	Record FREEZE FRAME PID DATA and DIAGNOSTIC MONITORING TEST RESULTS on repair order, then go to next step.
2	Verify stored DTC. Have DTCs P0102, P0103, P0117, P0118, P0122, P0123, P0443, P0500, P1102, P1103, P1122, P1123, P1496, P1497, P1498 and/or P1499 been stored?	Yes	Inspect and repair DTC P0102, P0103, P0117, P0118, P0122, P0123, P0443, P0500, P1102, P1103, P1122, P1123, P1496, P1497, P1498 or P1499, then go to step 33.
		No	Go to next step.
3	Is DTC P0130 on FREEZE FRAME PID DATA?	Yes	Go to next step.
		No	Inspect and repair DTC on FREEZE FRAME PID DATA, then go to step 33.
4	Temporarily clear DTC. Run DRIVE MODE. Verify TEST # 10:01:11, 10:02:11, or 10:03:11 on DIAGNOSTIC MONITORING TEST RESULTS. Does either one exceed MAX value?	Yes	Trouble is in process. Go to next step.
		No	Go to "01–01A ENGINE SYMPTOM TROUBLESHOOTING, INTERMITTENT CONCERNS".

STEP	INSPECTION		ACTION
5	Implement PID/DATA MONITOR AND RECORD (ECT V, MAF V, RPM, TP V, VS) from DIAGNOSTIC DATA LINK by using NGS tester. Is there any signal that is far out of specification when ignition switch is at ON, and run engine at idle?	Yes	Implement "01–01A ENGINE DIAGNOSTIC INSPECTION, Input System Investigation Procedure" and repair or replace, then go to step 33.
		No	Go to next step.
6	Continue monitoring items on previous step. Is there any input signal which causes drastic changes when it is set to be in trouble condition?	Yes	Implement "01–01A ENGINE DIAGNOSTIC INSPECTION, Input System Investigation Procedure" and repair or replace, then go to step 33.
		No	Go to next step.
7	Inspect exhaust system upstream from heated oxygen sensor (front). Is there any gas leak?	Yes	Repair or replace faulty exhaust parts, then go to step 33.
		No	Go to next step.
8	Inspect installation of heated oxygen sensor (front). Is it okay?	Yes	Go to next step.
		No	Install heated oxygen sensor properly, then go to step 33.
9	Implement PID/DATA MONITOR AND RECORD (FHO2S) from DIAGNOSTIC DATA LINK by using NGS tester. Is voltage on heated oxygen sensor as follows while racing engine (in neutral)? • More than 0.45 V when suddenly the accelerator pedal: rich condition • Less than 0.45 V during fuel cut: lean condition	Yes	Go to next step.
		No	Inspect and repair or replace faulty heated oxygen sensor (front), harness connector or terminal. ☞ 01–40 HEATED OXYGEN SENSOR INSPECTION Then go to step 33.
10	Inspect heated oxygen sensor heater (front) and related harness, connector and terminal. ☞ 01–40 HEATED OXYGEN SENSOR INSPECTION Is it okay?	Yes	Go to next step.
		No	Repair or replace faulty heated oxygen sensor (front), harness, connector or terminal, then go to step 33.
11	Inspect for open, poor connection and other problems on following harnesses, connectors and terminals (for fuel injector at each cylinders): • From main relay to fuel injector • From fuel injector to PCM Is there any trouble?	Yes	Repair or replace faulty harness, connector or terminal, then go to step 33.
		No	Go to next step.
12	Inspect injection amount of each fuel injector. ☞ 01–14 FUEL INJECTOR INSPECTION, Volume Test Is there any fuel injector in abnormal condition for amount or condition of injection?	Yes	Replace faulty fuel injector, then go to step 33.
		No	Go to next step.
13	Inspect LONGFT1 and SHRTFT1 on FREEZE FRAME PID DATA which are verified at step 1. Does it shift to negative side: lean side?	Yes	Go to next step.
		No	Go to step 18.
14	Inspect purge control system. ☞ 01–01A ENGINE SYSTEM INSPECTION, Purge Control Inspection Is it okay?	Yes	Go to next step.
		No	By following system inspection, repair or replace faulty parts, then go to step 33.
15	Inspect positive crankcase ventilation valve operation. ☞ 01–16 PCV VALVE INSPECTION Is it okay?	Yes	Go to next step.
		No	Replace positive crankcase ventilation valve, then go to step 33.
16	Inspect fuel line pressure under trouble condition. ☞ 01–01A ENGINE SYSTEM INSPECTION, Fuel Line Pressure Inspection Is fuel line pressure okay?	Yes	Inspect on fuel leakage and injection amount. ☞ 01–14 FUEL INJECTOR INSPECTION Replace faulty fuel injector, then go to step 33.
		No	Go to next step.
17	Inspect pressure regulator. ☞ 01–14 PRESSURE REGULATOR INSPECTION Is it okay?	Yes	Inspect and repair clogged fuel return hose, then go to step 33.
		No	Replace pressure regulator, then go to step 33.

STEP	INSPECTION		ACTION
18	Inspect for air suction at followings: • From air cleaner to throttle body • From throttle body to dynamic chamber • From dynamic chamber to intake manifold Visually inspect cracks and damages, and check fluctuation after spraying rust penetrating agent, then select air suction area. Can air suction be confirmed?	Yes	Repair or replace source of air suction, then go to step 33.
		No	Go to next step.
19	Inspect for air suction on vacuum hose which has negative pressure on intake manifold, same way as previous step. Can air suction be confirmed?	Yes	Repair or replace source of air suction, then go to step 33.
		No	Go to next step.
20	Inspect fuel line pressure under trouble condition. ☞ 01–01A ENGINE SYSTEM INSPECTION, Fuel Line Pressure Inspection Is fuel line pressure okay?	Yes	Go to step 27.
		No	Go to next step.
21	Inspect fuel pump maximum pressure. ☞ 01–14 FUEL PUMP INSPECTION, Fuel Pump Maximum Pressure Is it okay?	Yes	Go to next step.
		No	Replace fuel pump, then go to step 33.
22	Inspect pulsation damper for leaks and clogging. Is it okay?	Yes	Go to next step.
		No	Replace pulsation damper, then go to step 33.
23	Inspect clogging at fuel filter (high-pressure side). Is there any foreign material in fuel on fuel pump side of fuel filter?	Yes	Go to next step.
		No	Go to step 25.
24	Inspect inside of fuel tank for foreign materials and stain. Is inside of fuel tank okay?	Yes	Replace fuel filter (high-pressure side), then go to step 33.
		No	Clean inside of fuel tank and fuel filter (low-pressure side). Replace fuel filter (high-pressure side), then go to step 33.
25	Inspect for leaks and clogging in fuel line from fuel distributor to fuel pump. Is it okay?	Yes	Go to next step.
		No	Repair or replace source of fuel leaks or clogging, then go to step 33.
26	Inspect for leaks in fuel line from fuel filter (high-pressure side) to fuel tank (return side). Is it okay?	Yes	Replace pressure regulator, then go to step 33.
		No	Repair or replace source of fuel leaks, then go to step 33.
27	Verify blinking condition on each cylinders by setting timing light on high-tension lead under trouble condition. Does it blink regularly and stable?	Yes	Go to step 30.
		No	Go to next step.
28	Inspect resistance of ignition coil. ☞ 01–18 IGNITION COIL INSPECTION Is it okay?	Yes	Go to next step.
		No	Replace ignition coil, then go to step 33.
29	Inspect ignition control module. ☞ 01–18 IGNITION CONTROL MODULE INSPECTION Is it okay?	Yes	Inspect harness for poor connection, contacting body and wear from ignition control module to PCM. Repair faulty harness, then go to step 33.
		No	Replace ignition coil, then go to step 33.
30	Inspect EGR control system. ☞ 01–01A ENGINE SYSTEM INSPECTION, EGR Control Inspection Is it okay?	Yes	Go to next step.
		No	By following system inspection, repair or replace faulty parts, then go to step 33.
31	Remove radiator cap. Implement procedure to bleed air from engine coolant, then run engine at idle. Is there any small bubble which makes engine coolant white at filling opening? **Note** • Large bubbles are normal since they are remaining air coming out from engine coolant passage.	Yes	Air gets in from poor sealing on head gasket or other areas between combustion chamber and engine coolant passage. Repair or replace faulty parts, then go to step 33.
		No	Go to next step.

STEP	INSPECTION		ACTION
32	Inspect engine compression. ☞ 01–10 COMPRESSION INSPECTION Is it okay?	Yes	Go to next step.
		No	Implement engine overhaul, then go to next step.
33	Clear DTC. Run DRIVE MODE. Verify TEST # 10:01:11, 10:02:11, and 10:03:11 on DIAGNOSTIC MONITORING TEST RESULTS. Are they all below MAX value?	Yes	Go to next step.
		No	Go back to step 2. **Note** • If malfunction remains even though all inspections have been performed, get assistance from Technical Hotline/your distributor.
34	Verify stored PENDING TROUBLE CODE, DTC and DIAGNOSTIC MONITORING TEST RESULTS. Is there any code stored and/or out of specification?	Yes	Go to applicable DTC inspection.
		No	Troubleshooting completed.

DTC P0134	Front heated oxygen sensor circuit no activity detected
DETECTION CONDITION	When heated oxygen sensor (front) signal does not exceed 0.45 V after the engine is started, or stays below 0.45 V for 52.4 seconds after the engine has reached normal operating temperature, input voltage from throttle position sensor is above 0.62 V and running at 1,500 rpm or over
POSSIBLE CAUSE	• Heated oxygen sensor (front) malfunction • Heated oxygen sensor heater (front) malfunction • Open or short circuit in wiring harness • Poor connection of connector • Fuel injector malfunction • Pressure regulator malfunction • Pulsation damper malfunction • Fuel pump malfunction • Fuel filter clogged • Fuel delivery hose clogged or leaking • Leakage intake-air system • Leakage exhaust system • Ignition coil malfunction • Ignition control module malfunction • Insufficient compression • Mass air flow sensor malfunction • Engine coolant temperature sensor malfunction • Throttle position sensor malfunction • EGR system malfunction • Vacuum hoses damaged or loose **Warning** **The following troubleshooting flow chart contains the fuel system diagnosis and repair procedures. Read the following warnings before performing the fuel system services:** • **Fuel vapor is hazardous. It can easily ignite, causing serious injury and damage. Always keep sparks and flames away from fuel.** • **Fuel line spills and leaks are dangerous. Fuel can ignite and cause serious injuries or death and damage. Fuel can also irritate skin and eyes. To prevent this, always complete "BEFORE REPAIR PROCEDURE" and "AFTER REPAIR PROCEDURE" described in this manual.** **☞ 01–14 BEFORE REPAIR PROCEDURE** **☞ 01–14 AFTER REPAIR PROCEDURE**

STEP	INSPECTION		ACTION
1	Has FREEZE FRAME PID DATA been recorded?	Yes	Go to next step.
		No	Record FREEZE FRAME PID DATA on repair order, then go to next step.
2	Verify stored DTC. Have DTCs P0102, P0103, P0117, P0118, P0500, P1102, P1103, P1496, P1497, P1498 and/or P1499 been stored?	Yes	Inspect and repair DTC P0102, P0103, P0117, P0118, P0500, P1102, P1103, P1496, P1497, P1498 or P1499, then go to step 28.
		No	Go to next step.

STEP	INSPECTION		ACTION
3	Is DTC P0134 on FREEZE FRAME PID DATA?	Yes	Go to next step.
		No	Inspect and repair DTC on FREEZE FRAME PID DATA, then go to step 28.
4	Temporarily clear DTC. Verify RPM, LOAD, ECT and VSS on FREEZE FRAME PID DATA. Drive in normal mode for approx. 2 minutes under same condition. Is either P0134 stored on PENDING TROUBLE CODE?	Yes	Trouble is in process. Go to next step.
		No	Go to "01–01A ENGINE SYMPYOM TROUBLESHOOTING, INTERMITTENT CONCERNS".
5	Implement PID/DATA MONITOR AND RECORD (ECT V, RPM, TP V) from DIAGNOSTIC DATA LINK by using NGS tester. Is there any signal that is far out of specification when ignition switch is at ON, and run engine at idle?	Yes	Implement "01–01A ENGINE DIAGNOSTIC INSPECTION, Input System Investigation Procedure" and repair or replace, then go to step 28.
		No	Go to next step.
6	Continue monitoring items on previous step. Is there any input signal which causes drastic changes when it is set to be in trouble condition?	Yes	Implement "01–01A ENGINE DIAGNOSTIC INSPECTION, Input System Investigation Procedure" and repair or replace, then go to step 28.
		No	Go to next step.
7	Inspect exhaust system upstream from heated oxygen sensor (front). Is there any gas leak?	Yes	Repair or replace faulty exhaust parts, then go to step 28.
		No	Go to next step.
8	Inspect installation of heated oxygen sensor (front). Is it okay?	Yes	Go to next step.
		No	Install heated oxygen sensor properly, then go to step 28.
9	Implement PID/DATA MONITOR AND RECORD (FHO2S) from DIAGNOSTIC DATA LINK by using NGS tester. Is voltage on heated oxygen sensor as follows while racing engine (in neutral)? • More than 0.45 V when suddenly accelerator pedal: rich condition • Less than 0.45 V during fuel cut: lean condition	Yes	Go to next step.
		No	Inspect and repair or replace faulty heated oxygen sensor (front), harness, connector or terminal. ☞ 01–40 HEATED OXYGEN SENSOR INSPECTION Then go to step 28.
10	Inspect heated oxygen sensor heater (front) and related harness, connector and terminal. ☞ 01–40 HEATED OXYGEN SENSOR INSPECTION Is it okay?	Yes	Go to next step.
		No	Repair or replace faulty heated oxygen sensor (front), harness, connector or terminal, then go to step 28.
11	Inspect for open, poor connection and other problems on following harnesses, connectors and terminals (for fuel injector at each cylinders): • From main relay to fuel injector • From fuel injector to PCM Is there any trouble?	Yes	Repair or replace faulty harness, connector or terminal, then go to step 28.
		No	Go to next step.
12	Inspect injection amount of each fuel injector. ☞ 01–14 FUEL INJECTOR INSPECTION, Volume Test Is there any fuel injector in abnormal condition for amount or condition of injection?	Yes	Replace faulty fuel injector, then go to step 28.
		No	Go to next step.
13	Inspect for air suction at followings • From air cleaner to throttle body • From throttle body to dynamic chamber • From dynamic chamber to intake manifold Visually inspect cracks, and damages, and check fluctuation after spraying rust penetrating agent, then select air suction area. Can air suction be confirmed?	Yes	Repair or replace source of air suction, then go to step 28.
		No	Go to next step.
14	Inspect for air suction on vacuum hose which has negative pressure on intake manifold, same way as previous step. Can air suction be confirmed?	Yes	Repair or replace source of air suction, then go to step 28.
		No	Go to next step.

STEP	INSPECTION		ACTION
15	Inspect fuel line pressure under trouble condition. ☞ 01–01A ENGINE SYSTEM INSPECTION, Fuel Line Pressure Inspection Is fuel line pressure okay?	Yes	Go to step 22.
		No	Go to next step.
16	Inspect fuel pump maximum pressure. ☞ 01–14 FUEL PUMP INSPECTION, Fuel Pump Maximum Pressure Is it okay?	Yes	Go to next step.
		No	Replace fuel pump, then go to step 28.
17	Inspect pulsation damper for leaks and clogging. Is it okay?	Yes	Go to next step.
		No	Replace pulsation damper, then go to step 28.
18	Inspect clogging at fuel filter (high-pressure side). Is there any foreign material in fuel on fuel pump side of fuel filter?	Yes	Go to next step.
		No	Go to step 20.
19	Inspect inside of fuel tank for foreign materials and stain. Is inside of fuel tank okay?	Yes	Replace fuel filter (high-pressure side), then go to step 28.
		No	Clean inside of fuel tank and fuel filter (low-pressure side). Replace fuel filter (high-pressure side), then go to step 28.
20	Inspect for leaks and clogging in fuel line from fuel distributor to fuel pump. Is it okay?	Yes	Go to next step.
		No	Repair or replace source of fuel leaks or clogging, then go to step 28.
21	Inspect for leaks in fuel line from fuel filter (high-pressure side) to fuel tank (return side). Is it okay?	Yes	Replace pressure regulator, then go to step 28.
		No	Repair or replace source of fuel leaks, then go to step 28.
22	Verify blinking condition on each cylinders by setting timing light on high-tension lead under trouble condition. Does it blink regularly and stable?	Yes	Go to step 25.
		No	Go to next step.
23	Inspect resistance of ignition coil. ☞ 01–18 IGNITION COIL INSPECTION Is it okay?	Yes	Go to next step.
		No	Replace ignition coil, then go to step 28.
24	Inspect ignition control module. ☞ 01–18 IGNITION CONTROL MODULE INSPECTION Is it okay?	Yes	Inspect harness for poor connection, contacting body and wear from ignition control module to PCM. Repair faulty harness, then go to step 28.
		No	Replace ignition coil, then go to step 28.
25	Inspect EGR control system. ☞ 01–01A ENGINE SYSTEM INSPECTION, EGR Control Inspection Is it okay?	Yes	Go to next step.
		No	By following system inspection, repair or replace faulty parts, then go to step 28.
26	Remove radiator cap. Implement procedure to bleed air from engine coolant, then run engine at idle. Is there any small bubble which makes engine coolant white at filling opening? **Note** • Large bubbles are normal since they are remaining air coming out from engine coolant passage.	Yes	Air gets in from poor sealing on head gasket or other areas between combustion chamber and engine coolant passage. Repair or replace faulty parts, then go to step 28.
		No	Go to next step.
27	Inspect engine compression. ☞ 01–10 COMPRESSION INSPECTION Is it okay?	Yes	Go to next step.
		No	Implement engine overhaul, then go to next step.
28	Clear DTC. Verify stored PENDING TROUBLE CODE and DTC, after running under DRIVE MODE. Is there any PENDING TROUBLE CODE and/or DTC stored?	Yes	Go to applicable DTC inspection. **Note** • If malfunction remains even though all inspections have been performed, get assistance from Technical Hotline/your distributor.
		No	Troubleshooting completed.

DTC P0138	Rear heated oxygen sensor circuit high input
DETECTION CONDITION	When heated oxygen sensor (rear) signal stays above 0.45 V for 6 seconds in deceleration fuel cut after the engine has reached normal operating temperature.
POSSIBLE CAUSE	• Short circuit in Heated oxygen sensor (rear) wiring harness

STEP	INSPECTION		ACTION
1	Has FREEZE FRAME PID DATA been recorded?	Yes	Go to next step.
		No	Record FREEZE FRAME PID DATA on repair order, then go to next step.
2	Is DTC P0138 on FREEZE FRAME PID DATA?	Yes	Go to next step.
		No	Inspect or repair DTC on FREEZE FRAME PID DATA, then go to step 5.
3	Temporarily clear DTC. Verify RPM, LOAD, ECT and VSS on FREEZE FRAME PID DATA. Drive for approx. 1 minute under same condition. Is P0138 stored on PENDING TROUBLE CODE?	Yes	Trouble is process. Go to next step.
		No	Go to "01–01A ENGINE SYSTEM TROUBLESHOOTING, INTERMITTENT CONCERNS".
4	Disconnect the heated oxygen sensor (rear) and PCM connectors. Check if there is continuity between the following terminals: • heated oxygen sensor (rear) terminal A and B • heated oxygen sensor (rear) vehicle harness side connector terminal A and B • heated oxygen sensor (rear) terminal C and D • heated oxygen sensor (rear) vehicle harness side connector terminal C and D Is it okay?	Yes	Go to next step.
		No	Repair or replace faulty heated oxygen sensor (rear), harness, connector or terminal, then go to next step.
5	Clear DTC. Verify stored PENDING TROUBLE CODE and DTC, after running under DRIVE MODE. Is there any PENDING TROUBLE CODE and/or DTC stored?	Yes	Go to applicable DTC inspection. **Note** • If malfunction remains even though all inspections have been performed, get assistance from Technical Hotline/your distributor.
		No	Troubleshooting completed.

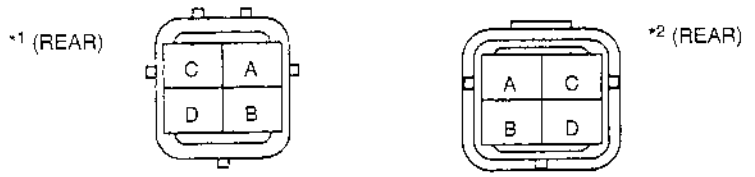

SENSOR SIDE CONNECTOR
(VIEW FROM TERMINAL CONNECTOR)

X5U101WED

*1 : Except California emission regulations applicable model
*2 : California emission regulations applicable model

DTC P0140	Rear heated oxygen sensor circuit no activity detected
DETECTION CONDITION	When heated oxygen sensor (rear) signal does not exceed 0.45 V after the engine is started, or stays below 0.45 V for 19 seconds after the engine has reached normal operating temperature, input voltage from throttle position sensor is above 0.62 V, running at 1,500 rpm or over and power is supplied to heated oxygen sensor heater (rear)
POSSIBLE CAUSE	• Heated oxygen sensor (rear) malfunction • Heated oxygen sensor heater (rear) malfunction • Fuel injector malfunction • Pressure regulator malfunction • Pulsation damper malfunction • Fuel pump malfunction • Fuel filter clogged • Fuel delivery hose clogged or leaking • Leakage intake-air system • Leakage exhaust system • Ignition coil malfunction • Ignition control module malfunction • Insufficient compression • Mass air flow sensor malfunction • Engine coolant temperature sensor malfunction • Throttle position sensor malfunction • EGR system malfunction • Open or short circuit in wiring harness • Poor connection of connector • Vacuum hoses damaged or loose **Warning** **The following troubleshooting flow chart contains the fuel system diagnosis and repair procedures. Read the following warnings before performing the fuel system services:** • **Fuel vapor is hazardous. It can easily ignite, causing serious injury and damage. Always keep sparks and flames away from fuel.** • **Fuel line spills and leaks are dangerous. Fuel can ignite and cause serious injuries or death and damage. Fuel can also irritate skin and eyes. To prevent this, always complete "BEFORE REPAIR PROCEDURE" and "AFTER REPAIR PROCEDURE" described in this manual.** **☞ 01–14 BEFORE REPAIR PROCEDURE** **☞ 01–14 AFTER REPAIR PROCEDURE**

STEP	INSPECTION		ACTION
1	Has FREEZE FRAME PID DATA been recorded?	Yes	Go to next step.
		No	Record FREEZE FRAME PID DATA on repair order, then go to next step.
2	Verify stored DTC. Have DTCs P0102, P0103, P0117, P0118, P0500, P1102, P1103, P1496, P1497, P1498 and/or P1499 been stored?	Yes	Inspect and repair DTC P0102, P0103, P0117, P0118, P0500, P1102, P1103, P1496, P1497, P1498 or P1499, then go to step 29.
		No	Go to next step.
3	Is DTC P0140 on FREEZE FRAME PID DATA?	Yes	Go to next step.
		No	Inspect and repair DTC on FREEZE FRAME PID DATA, then go to step 29.
4	Verify stored PENDING TROUBLE CODE. Is P0134 stored?	Yes	Inspect and repair P0134 on DTC, then go to step 29.
		No	Go to next step.
5	Temporarily clear DTC. Verify RPM, LOAD, ECT and VSS on FREEZE FRAME PID DATA. Drive for approx. 2 minutes under same condition. Is P0140 stored in PENDING TROUBLE CODE?	Yes	Trouble is in process. Go to next step.
		No	Go to "01–01A ENGINE SYMPTOM TROUBLESHOOTING, INTERMITTENT CONCERNS".
6	Implement PID/DATA MONITOR AND RECORD (ECT V, RPM, TP V) from DIAGNOSTIC DATA LINK by using NGS tester. Is there any signal that is far out of specification when ignition switch is at ON, and run engine at idle?	Yes	Implement "01–01A ENGINE DIAGNOSTIC INSPECTION, Input System Investigation Procedure" and repair or replace, then go to step 29.
		No	Go to next step.
7	Continue monitoring items on previous step. Is there any input signal which causes drastic changes when it is set to be in trouble condition?	Yes	Implement "01–01A ENGINE DIAGNOSTIC INSPECTION, Input System Investigation Procedure" and repair or replace, then go to step 29.
		No	Go to next step.

STEP	INSPECTION		ACTION
8	Inspect exhaust system upstream from heated oxygen sensor (rear). Is there any gas leak?	Yes	Repair or replace faulty exhaust parts, then go to step 29.
		No	Go to next step.
9	Inspect installation of heated oxygen sensor (rear). Is it okay?	Yes	Go to next step.
		No	Install heated oxygen sensor properly, then go to step 29.
10	Implement PID/DATA MONITOR AND RECORD (RHO2S) from DIAGNOSTIC DATA LINK by using NGS tester. Is voltage on heated oxygen sensor as follows while racing engine (in neutral)? • Heated oxygen sensor voltage increases from 0 to 1V when accelerator pedal is pressed, and decreases when accelerator pedal is released.	Yes	Go to next step.
		No	Inspect and repair or replace faulty heated oxygen sensor (rear), harness, connector or terminal. ☞ 01–40 HEATED OXYGEN SENSOR INSPECTION Then go to step 29.
11	Inspect heated oxygen sensor heater (rear) and related harness, connector and terminal. ☞ 01–40 HEATED OXYGEN SENSOR INSPECTION Is it okay?	Yes	Go to next step.
		No	Repair or replace faulty heated oxygen sensor (rear), harness, connector or terminal, then go to step 29.
12	Inspect for open, poor connection and other problems on following harnesses, connectors and terminals (for fuel injector at each cylinders): • From main relay to fuel injector • From fuel injector to PCM Is there any trouble?	Yes	Repair or replace faulty harness, connector or terminal, then go to step 29.
		No	Go to next step.
13	Inspect injection amount of each fuel injector. ☞ 01–14 FUEL INJECTOR INSPECTION, Volume Test Is there any fuel injector in abnormal condition for amount or condition of injection?	Yes	Replace faulty fuel injector, then go to step 29.
		No	Go to next step.
14	Inspect for air suction at followings: • From air cleaner to throttle body • From throttle body to dynamic chamber • From dynamic chamber to intake manifold Visually inspect cracks, and damages, and check fluctuation after spraying rust penetrating agent, then select air suction area. Can air suction be confirmed?	Yes	Repair or replace source of air suction, then go to step 29.
		No	Go to next step.
15	Inspect for air suction on vacuum hose which has negative pressure on intake manifold, same way as previous step. Can air suction be confirmed?	Yes	Repair or replace source of air suction, then go to step 29.
		No	Go to next step.
16	Inspect fuel line pressure under trouble condition. ☞ 01–01A ENGINE SYSTEM INSPECTION, Fuel Line Pressure Inspection. Is fuel line pressure okay?	Yes	Go to step 23.
		No	Go to next step.
17	Inspect fuel pump maximum pressure. ☞ 01–14 FUEL PUMP INSPECTION, Fuel Pump Maximum Pressure Is it okay?	Yes	Go to next step.
		No	Replace fuel pump, then go to step 29.
18	Inspect pulsation damper for leaks and clogging. Is it okay?	Yes	Go to next step.
		No	Replace pulsation damper, then go to step 29.
19	Inspect clogging at fuel filter (high-pressure side). Is there any foreign material in fuel on fuel pump side of filter?	Yes	Go to next step.
		No	Go to step 21.
20	Inspect inside of fuel tank for foreign materials and stain. Is inside of fuel tank okay?	Yes	Replace fuel filter (high-pressure side), then go to step 29.
		No	Clean inside of fuel tank and fuel filter (low-pressure side). Replace fuel filter (high-pressure side), then go to step 29.
21	Inspect for leaks and clogging in fuel line from fuel distributor to fuel pump. Is it okay?	Yes	Go to next step.
		No	Repair or replace source of fuel leaks or clogging, then go to step 29.

STEP	INSPECTION		ACTION
22	Inspect for leaks in fuel line from fuel filter (high-pressure side) to fuel tank (return side). Is it okay?	Yes	Replace pressure regulator, then go to step 29.
		No	Repair or replace source of fuel leaks, then go to step 29.
23	Verify blinking condition on each cylinders by setting timing light on high-tension lead under trouble condition. Does it blink regularly and stable?	Yes	Go to step 26.
		No	Go to next step.
24	Inspect resistance of ignition coil. ☞ 01–18 IGNITION COIL INSPECTION Is it okay?	Yes	Go to next step.
		No	Replace ignition coil, then go to step 29.
25	Inspect ignition control module. ☞ 01–18 IGNITION CONTROL MODULE INSPECTION Is it okay?	Yes	Inspect harness for poor connection, contacting body and wear from ignition control module to PCM. Repair faulty harness, then go to step 29.
		No	Replace ignition coil, then go to step 29.
26	Inspect EGR control system. ☞ 01–01A ENGINE SYSTEM INSPECTION, EGR Control Inspection Is it okay?	Yes	Go to next step.
		No	By following system inspection, repair or replace faulty parts, then go to step 29.
27	Remove radiator cap. Implement procedure to bleed air from engine coolant, then run engine at idle. Is there any small bubble which makes engine coolant white at filling opening? **Note** • Large bubbles are normal since they are remaining air coming out from engine coolant passage.	Yes	Air gets in from poor sealing on head gasket or other areas between combustion chamber and engine coolant passage. Repair or replace faulty parts, then go to step 29.
		No	Go to next step.
28	Inspect engine compression. ☞ 01–10 COMPRESSION INSPECTION Is it okay?	Yes	Go to next step.
		No	Implement engine overhaul, then go to next step.
29	Clear DTC. Verify stored PENDING TROUBLE CODE and DTC, after running under DRIVE MODE. Is there any PENDING TROUBLE CODE and/or DTC stored?	Yes	Go to applicable DTC inspection. **Note** • If malfunction remains even though all inspections have been performed, get assistance from Technical Hotline/your distributor.
		No	Troubleshooting completed.

DTC P0171	Fuel trim system too lean
DETECTION CONDITION	Fuel injection closed loop correction and learning correction are above the specified value because of system too lean
POSSIBLE CAUSE	• Fuel injector malfunction • Fuel pump malfunction • Fuel filter clogged • Fuel delivery hose clogged or leaking • Pressure regulator malfunction • Pulsation damper malfunction • Ignition coil malfunction • Ignition control module malfunction • High-tension lead malfunction • Spark plug malfunction • Leakage in intake-air system • Leakage exhaust system • Insufficient compression • Mass air flow sensor malfunction • Engine coolant temperature sensor malfunction • Throttle position sensor malfunction • Heated oxygen sensor (front) malfunction • Open or short circuit in wiring harness • Poor connection of connector • Vacuum hoses damaged or loose **Warning** **The following troubleshooting flow chart contains the fuel system diagnosis and repair procedures. Read the following warnings before performing the fuel system services:** • **Fuel vapor is hazardous. It can easily ignite, causing serious injury and damage. Always keep sparks and flames away from fuel.** • **Fuel line spills and leaks are dangerous. Fuel can ignite and cause serious injuries or death and damage. Fuel can also irritate skin and eyes. To prevent this, always complete "BEFORE REPAIR PROCEDURE" and "AFTER REPAIR PROCEDURE" described in this manual.** **☞ 01–14 BEFORE REPAIR PROCEDURE** **☞ 01–14 AFTER REPAIR PROCEDURE**

STEP	INSPECTION		ACTION
1	Has FREEZE FRAME PID DATA been recorded?	Yes	Go to next step.
		No	Record FREEZE FRAME PID DATA on repair order, then go to next step.
2	Verify stored DTC. Have DTCs P0102, P0103, P0117, P0118, P0122, P0123, P0443, P0500 P1102, P1103 P1122, and/or P1123 been stored?	Yes	Inspect and repair DTC P0102, P0103, P0117, P0118, P0122, P0123, P0443, P0500, P1102, P1103, P1122 or P1123, then go to step 27.
		No	Go to next step.
3	Is DTC P0171 on FREEZE FRAME PID DATA?	Yes	Go to next step.
		No	Inspect and repair DTC on FREEZE FRAME PID DATA, then go to step 27.
4	Temporarily clear DTC. Verify RPM, LOAD ECT and VSS on FREEZE FRAME PID DATA. Drive for approx. 20 seconds under same condition. Is P0171 stored to PENDING TROUBLE CODE?	Yes	Trouble is in process. Go to next step.
		No	Go to "01–01A ENGINE SYMPTOM TROUBLESHOOTING, INTERMITTENT CONCERNS".
5	Implement PID/DATA MONITOR AND RECORD (ECT V, MAF V, TP V, VS) from DIAGNOSTIC DATA LINK by using NGS tester. Is there any signal that is far out of specification when ignition switch is at ON, and run engine at idle?	Yes	Implement "01–01A ENGINE DIAGNOSTIC INSPECTION, Input System Investigation Procedure" and repair or replace, then go to step 27.
		No	Go to next step.
6	Continue monitoring items on previous step. Is there any input signal which causes drastic changes when it is set to be in trouble condition?	Yes	Implement "01–01A ENGINE DIAGNOSTIC INSPECTION, Input System Investigation Procedure" and repair or replace, then go to step 27.
		No	Go to next step.

STEP	INSPECTION		ACTION
7	Implement PID/DATA MONITOR AND RECORD (FHO2S) from DIAGNOSTIC DATA LINK by using NGS tester. Is voltage on heated oxygen sensor as follows while racing engine (in neutral)? • More than 0.45 V when suddenly accelerator pedal: rich condition • Less than 0.45 V during fuel cut: lean condition	Yes	Go to next step.
		No	Inspect and repair or replace faulty heated oxygen sensor (front), harness, connector or terminal. ☞ 01–40 HEATED OXYGEN SENSOR INSPECTION Then go to step 27.
8	Inspect for air suction at followings: • From air cleaner to throttle body • From throttle body to dynamic chamber • From dynamic chamber to intake manifold Visually inspect cracks, and damages, and check fluctuation after spraying rust penetrating agent, then select air suction area. Can air suction be confirmed?	Yes	Repair or replace source of air suction, then go to step 27.
		No	Go to next step.
9	Inspect for air suction on vacuum hose which has negative pressure on intake manifold, same way as previous step. Can air suction be confirmed?	Yes	Repair or replace source of air suction, then go to step 27.
		No	Go to next step.
10	Inspect exhaust system. Is there any gas leak?	Yes	Repair or replace faulty exhaust parts, then go to step 27.
		No	Go to next step.
11	Inspect fuel line pressure under trouble condition. ☞ 01–01A ENGINE SYSTEM INSPECTION, Fuel Line Pressure Inspection Is fuel line pressure okay?	Yes	Go to step 18.
		No	Go to next step.
12	Inspect fuel pump maximum pressure. ☞ 01–14 FUEL PUMP INSPECTION, Fuel Pump Maximum Pressure Is it okay?	Yes	Go to next step.
		No	Replace fuel pump, then go to step 27.
13	Inspect pulsation damper for leaks and clogging. Is it okay?	Yes	Go to next step.
		No	Replace pulsation damper, then go to step 27.
14	Inspect clogging at fuel filter (high-pressure side). Is there any foreign material in fuel on fuel pump side of filter?	Yes	Go to next step.
		No	Go to step 16.
15	Inspect inside of fuel tank for foreign materials and stain. Is inside of fuel tank okay?	Yes	Replace fuel filter (high-pressure side), then go to step 27.
		No	Clean inside of fuel tank and fuel filter (low-pressure side). Replace fuel filter (high-pressure side), then go to step 27.
16	Inspect for leaks and clogging in fuel line from fuel distributor to fuel pump. Is it okay?	Yes	Go to next step.
		No	Repair or replace source of fuel leaks or clogging, then go to step 27.
17	Inspect for leaks in fuel line from fuel filter (high-pressure side) to fuel tank (return side). Is it okay?	Yes	Replace pressure regulator, then go to step 27.
		No	Repair or replace source of fuel leaks, then go to step 27.
18	Inspect for open, poor connection and other problems on following harnesses, connectors and terminals (for fuel injector at each cylinders): • From main relay to fuel injector • From fuel injector to PCM Is there any trouble?	Yes	Repair or replace faulty harness, connector or terminal, then go to step 27.
		No	Go to next step.
19	Inspect injection amount of each fuel injector. ☞ 01–14 FUEL INJECTOR INSPECTION, Volume Test Is there any fuel injector in abnormal condition for amount or condition of injection?	Yes	Replace faulty fuel injector, then go to step 27.
		No	Go to next step.
20	Inspect spark plugs at each cylinders. Is it okay?	Yes	Go to next step.
		No	Replace faulty spark plug, then go to step 27.

STEP	INSPECTION		ACTION
21	Verify blinking condition on each cylinders by setting timing light on high-tension lead under trouble condition. Does it blink regularly and stable? **Note** • When it occurs at idle, inspect spark plugs on each cylinders and verify that sparks are stable.	Yes	Go to step 25.
		No	Go to next step.
22	Inspect high-tension leads for installation condition, corrosion on terminal, open lead and damaged cover. Are they okay?	Yes	Go to next step.
		No	Repair or replace faulty high-tension lead, then go to step 27.
23	Inspect resistance of ignition coil. ☞ 01–18 IGNITION COIL INSPECTION Is it okay?	Yes	Go to next step.
		No	Replace ignition coil, then go to step 27.
24	Inspect ignition control module. ☞ 01–18 IGNITION CONTROL MODULE INSPECTION Is it okay?	Yes	Inspect harness for poor connection, contacting body and wear from ignition control module to PCM. Repair faulty harness, then go to step 27.
		No	Replace ignition coil, then go to step 27.
25	Remove radiator cap. Implement procedure to bleed air from engine coolant, then run engine at idle. Is there any small bubble which makes engine coolant white at filling opening? **Note** • Large bubbles are normal since they are remaining air coming out from engine coolant passage.	Yes	Air gets in from poor sealing on head gasket or other areas between combustion chamber and engine coolant passage. Repair or replace faulty parts, then go to step 27.
		No	Go to next step.
26	Inspect engine compression. ☞ 01–10 COMPRESSION INSPECTION Is it okay?	Yes	Go to next step.
		No	Implement engine overhaul, then go to next step.
27	Idle engine after warming up, then run monitor on PID/DATA MONITOR (LONGFT1, SHRTFT1) from GENERIC OBD II FUNCTIONS by using NGS tester. Add LONGFT1 and SHRTFT1 value. Is the value within –15% to +15%?	Yes	Go to next step.
		No	Go back to step 4. **Note** • If malfunction remains even though all inspections have been performed, get assistance from Technical Hotline/your distributor.
28	Clear DTC. Verify stored PENDING TROUBLE CODE and DTC, after running under DRIVE MODE. Is there any PENDING TROUBLE CODE and/or DTC stored?	Yes	Go to applicable DTC inspection.
		No	Troubleshooting completed.

DTC P0172	Fuel trim system too rich
DETECTION CONDITION	Fuel injection closed loop correction and learning correction are above the specified value because of system too rich
POSSIBLE CAUSE	• Fuel injector malfunction • Fuel return hose clogged • Pressure regulator malfunction • Purge solenoid malfunction • Mass air flow sensor malfunction • Engine coolant temperature sensor malfunction • Throttle position sensor malfunction • Heated oxygen sensor (front) malfunction • Open or short circuit in wiring harness • Poor connection of connector Warning **The following troubleshooting flow chart contains the fuel system diagnosis and repair procedures. Read the following warnings before performing the fuel system services:** **• Fuel vapor is hazardous. It can easily ignite, causing serious injury and damage. Always keep sparks and flames away from fuel.** **• Fuel line spills and leaks are dangerous. Fuel can ignite and cause serious injuries or death and damage. Fuel can also irritate skin and eyes. To prevent this, always complete "BEFORE REPAIR PROCEDURE" and "AFTER REPAIR PROCEDURE" described in this manual.** **☞ 01–14 BEFORE REPAIR PROCEDURE** **☞ 01–14 AFTER REPAIR PROCEDURE**

STEP	INSPECTION		ACTION
1	Has FREEZE FRAME PID DATA been recorded?	Yes	Go to next step.
		No	Record FREEZE FRAME PID DATA on repair order, then go to next step.
2	Verify stored DTC. Have DTCs P0102, P0103, P0117, P0118, P0122, P0123, P0443, P0500, P1102, P1103, P1122, and/or P1123 been stored?	Yes	Inspect and repair DTC P0102, P0103, P0117, P0118, P0122, P0123, P0443, P0500, P1102, P1103, P1122 or P1123, then go to step 12.
		No	Go to next step.
3	Is DTC P0172 on FREEZE FRAME PID DATA?	Yes	Go to next step.
		No	Inspect and repair DTC on FREEZE FRAME PID DATA, then go to step 12.
4	Temporarily clear DTC. Verify RPM, LOAD ECT and VSS on FREEZE FRAME PID DATA. Drive for approx. 20 seconds under same condition. Is P0172 stored to PENDING TROUBLE CODE?	Yes	Trouble is in process. Go to next step.
		No	Go to "01–01A ENGINE SYMPTOM TROUBLESHOOTING, INTERMITTENT CONCERNS".
5	Implement PID/DATA MONITOR AND RECORD (ECT V, MAF V, TP V, VS) from DIAGNOSTIC DATA LINK by using NGS tester. Is there any signal that is far out of specification when ignition switch is at ON, and run engine at idle?	Yes	Implement "01–01A ENGINE DIAGNOSTIC INSPECTION, Input System Investigation Procedure" and repair or replace, then go to step 12.
		No	Go to next step.
6	Continue monitoring items on previous step. Is there any input signal which causes drastic changes when it is set to be in trouble condition?	Yes	Implement "01–01A ENGINE DIAGNOSTIC INSPECTION, Input System Investigation Procedure" and repair or replace, then go to step 12.
		No	Go to next step.
7	Implement PID/DATA MONITOR AND RECORD (FHO2S) from DIAGNOSTIC DATA LINK by using NGS tester. Is voltage on heated oxygen sensor as follows while racing engine (in neutral)? • More than 0.45 V when suddenly accelerator pedal: rich condition • Less than 0.45 V during fuel cut: lean condition	Yes	Go to next step.
		No	Inspect and repair or replace faulty heated oxygen sensor (front), harness, connector or terminal. ☞ 01–40 HEATED OXYGEN SENSOR INSPECTION Then go to step 13.
8	Inspect purge control system. ☞ 01–01A ENGINE SYSTEM INSPECTION, Purge Control Inspection Is it okay?	Yes	Go to next step.
		No	By following system inspection, repair or replace faulty parts, then go to step 12.

STEP	INSPECTION		ACTION
9	Inspect positive crankcase ventilation valve operation. ☞ 01–16 PCV VALVE INSPECTION Is it okay?	Yes	Go to next step.
		No	Replace positive crankcase ventilation valve, then go to step 12.
10	Inspect fuel line pressure under trouble condition. ☞ 01–01A ENGINE SYSTEM INSPECTION, Fuel Line Pressure Inspection Is fuel line pressure okay?	Yes	Inspect on fuel leakage and injection amount. ☞ 01–14 FUEL INJECTOR INSPECTION Replace faulty fuel injector, then go to step 13.
		No	Go to next step.
11	Inspect pressure regulator. ☞ 01–14 PRESSURE REGULATOR INSPECTION Is it okay?	Yes	Inspect and repair clogged fuel return hose, then go to step 12.
		No	Replace pressure regulator, then go to step 12.
12	Idle engine after warming up, then run monitor on PID/DATA MONITOR (LONGFT1, SHRTFT1) from GENERIC OBD II FUNCTIONS by using NGS tester. Add LONGFT1 and SHRTFT1 value. Is the value within –15% to +15%?	Yes	Go to next step.
		No	Go back to step 4. **Note** • If malfunction remains even though all inspections have been performed, get assistance from Technical Hotline/your distributor.
13	Clear DTC. Verify stored PENDING TROUBLE CODE and DTC, after running under DRIVE MODE. Is there any PENDING TROUBLE CODE and/or DTC stored?	Yes	Go to applicable DTC inspection.
		No	Troubleshooting completed.

DTC P0300	Random misfire detected
DETECTION CONDITION	PCM input signal from crankshaft position sensor signal is irregular
POSSIBLE CAUSE	• Ignition timing without specification • Air gap of crankshaft position sensor without specification • Ignition coil malfunction • Ignition control module malfunction • High-tension lead malfunction • Spark plug malfunction • Fuel injector malfunction • Fuel pump malfunction • Fuel filter clogged • Fuel delivery hose clogged or leaking • Fuel return hose clogged • Pressure regulator malfunction • Pulsation damper malfunction • Purge solenoid valve malfunction • Positive crankcase ventilation valve malfunction • Leakage in intake-air system • Insufficient compression • EGR system malfunction • Vibration of drive unit • Excessive load of A/C compressor, power steering oil pump, and generator • Mass air flow sensor malfunction • Engine coolant temperature sensor malfunction • Intake air temperature sensor malfunction • Crankshaft position sensor malfunction • Camshaft position sensor malfunction • Throttle position sensor malfunction • Heated oxygen sensor (front) malfunction • Vehicle speed sensor malfunction • Break switch malfunction • Open or short circuit in wiring harness • Poor connection of connector • Vacuum hoses damaged or loose **Warning** **The following troubleshooting flow chart contains the fuel system diagnosis and repair procedures. Read the following warnings before performing the fuel system services:** • **Fuel vapor is hazardous. It can easily ignite, causing serious injury and damage. Always keep sparks and flames away from fuel.** • **Fuel line spills and leaks are dangerous. Fuel can ignite and cause serious injuries or death and damage. Fuel can also irritate skin and eyes. To prevent this, always complete "BEFORE REPAIR PROCEDURE" and "AFTER REPAIR PROCEDURE" described in this manual.** **☞ 01–14 BEFORE REPAIR PROCEDURE** **☞ 01–14 AFTER REPAIR PROCEDURE**

STEP	INSPECTION		ACTION
1	Has FREEZE FRAME PID DATA been recorded?	Yes	Go to next step.
		No	Record FREEZE FRAME PID DATA on repair order, then go to next step.
2	Verify stored DTC. Have DTCs P0102, P0103, P0111, P0112, P0113, P0117, P0118, P0120, P0335, P0443, P0500, P0703, P1102, P1103, P1496, P1497, P1498 and/or P1499 been stored?	Yes	Inspect or repair DTC P0102, P0103, P0111, P0112, P0113, P0117, P0118, P0120, P0335, P0443, P0500, P0703, P1102, P1103, P1496, P1497, P1498 or P1499, then go to step 39.
		No	Go to next step.
3	Is DTC P0300 on FREEZE FRAME PID DATA?	Yes	Go to next step.
		No	Inspect or repair DTC on FREEZE FRAME PID DATA, then go to step 39.

STEP	INSPECTION		ACTION
4	Temporarily clear DTC. Race engine 2 to 3 times in neutral. Then verify RPM, LOAD, ECT and VSS on FREEZE FRAME PID DATA. Operate under condition simulating constant drives for length that allows engine to revolve 1,000 times. For example, at 2,000 rpm, 1,000 × 60/ 2,000 = more than 30 seconds. Is P0300 set on PENDING TROUBLE CODE? **Note** • Adjust electrical load, A/C load, and AT range or MT gear position to simulate condition reported by customer.	Yes	Trouble is in process. Go to step 6.
		No	Go to next step.
5	Drive vehicle under condition reported by customer. For example, speed, acceleration, AT range or MT gear position, rough or winding road at which MIL illuminates. Is P0300 set on either PENDING TROUBLE CODE or DTC?	Yes	Trouble is in process. Go to next step.
		No	Go to "01–01A ENGINE SYMPTOM TROUBLESHOOTING, INTERMITTENT CONCERNS".
6	Is vehicle vibration due to vehicle speed felt when driving under trouble reiteration condition? **Note** • When it is vibrating, change AT range or MT gear position to verify whether vibration is caused by vehicle speed or running engine.	Yes	Diagnose and repair for vibration from drive shaft to tire, then go to step 39.
		No	Go to next step.
7	Implement PID/DATA MONITOR AND RECORD (RPM, TP V, ECT V, IAT V, MAF V, BRK SW, VS) from DIAGNOSTIC DATA LINK by using NGS tester. Is there any signal that is far out of specification when ignition switch is at ON, and run engine at idle?	Yes	Implement "01–01A ENGINE DIAGNOSTIC INSPECTION, Input System Investigation Procedure" and repair or replace, then go to step 39.
		No	Go to next step.
8	Continue monitoring items on previous step. Is there any input signal which causes drastic changes when it is set to be in trouble condition?	Yes	Implement "01–01A ENGINE DIAGNOSTIC INSPECTION, Input System Investigation Procedure" and repair or replace, then go to step 39.
		No	Go to next step.
9	Inspect ignition timing. ☞ 01–10 ENGINE TUNE-UP, Ignition Timing Is it okay?	Yes	Go to step 12.
		No	Go to next step.
10	Adjust ignition timing. ☞ 01–10 ENGINE TUNE-UP, Ignition Timing Is it adjusted properly?	Yes	Go to step 39.
		No	Go to next step.
11	Inspect camshaft position sensor. ☞ 01–40 CAMSHAFT POSITION SENSOR INSPECTION Is it okay?	Yes	Inspect installation condition and damages on timing belt and gears, repair faulty parts, then go to step 39.
		No	Replace camshaft position sensor, then go to step 39.
12	Inspect crankshaft pulley for loose or unstable installation, and shape and installation condition of sensor plate. Is it okay?	Yes	Go to next step.
		No	Repair or replace faulty parts, then go to step 39.
13	Inspect crankshaft position sensor for loose installation and air gap. Is it okay?	Yes	Go to next step.
		No	Install crankshaft position sensor properly or adjust air gap. ☞ 01–40 CRANKSHAFT POSITION SENSOR ADJUSTMENT Then go to step 39.
14	Inspect spark plug condition. Is it okay?	Yes	Go to next step.
		No	Replace spark plug, then go to step 39.

STEP	INSPECTION		ACTION
15	Verify blinking condition on each cylinders by setting timing light on high-tension lead under trouble condition. Does it blink regularly and stable? **Note** • When it occurs at idle, inspect spark plugs on each cylinders and verify that sparks are stable.	Yes	Go to step 19.
		No	Go to next step.
16	Inspect high-tension leads for installation condition, corrosion on terminal, open lead and damaged cover. Is condition of high-tension lead okay?	Yes	Go to next step.
		No	Repair or replace faulty high-tension lead, then go to step 39.
17	Inspect resistance of ignition coil. ☞ 01–18 IGNITION COIL INSPECTION Is it okay?	Yes	Go to next step.
		No	Replace ignition coil, then go to step 39.
18	Inspect ignition control module. ☞ 01–18 IGNITION CONTROL MODULE INSPECTION Is it okay?	Yes	Inspect harness for poor connection, contacting body and wear from ignition control module to PCM. Repair faulty harness, then go to step 39.
		No	Replace ignition coil, then go to step 39.
19	Remove radiator cap. Implement procedure to bleed air from engine coolant, then run engine at idle. Is there any small bubble which makes engine coolant white at filling opening? **Note** • Large bubbles are normal since they are remaining air coming out from engine coolant passage.	Yes	Air gets in from poor sealing on head gasket or other areas between combustion chamber and engine coolant passage. Repair or replace faulty parts, then go to step 39.
		No	Go to next step.
20	Inspect engine compression. ☞ 01–10 COMPRESSION INSPECTION Is it okay?	Yes	Go to next step.
		No	Implement engine overhaul, then go to step 39.
21	Inspect drive belt and other for squeaking, and damage. Is it okay?	Yes	Go to next step.
		No	Replace damaged belt, then go to step 39.
22	Inspect for loose installation and excessive load on idler pulley. Is it okay?	Yes	Go to next step.
		No	Install properly or replace idler pulley, then go to step 39.
23	Inspect following parts for loose installation and excessive load: • A/C: refrigerant gas pressure • Power steering: hydraulic pressure • Generator: drastic changes in output voltage It is necessary to investigate cause if there is problem. Is it okay?	Yes	Go to next step.
		No	Repair or replace faulty parts, then go to step 39.
24	Inspect EGR control system. ☞ 01–01A ENGINE SYSTEM INSPECTION, EGR Control Inspection Is it okay?	Yes	Go to next step.
		No	By following system inspection, repair or replace faulty parts, then go to step 39.
25	Implement PID/DATA MONITOR AND RECORD (FHO2S) from DIAGNOSTIC DATA LINK by using NGS tester. Verify heated oxygen sensor turnover under trouble condition. Does it turnover regularly?	Yes	Implement engine overhaul, then go to step 39.
		No	Go to next step.

STEP	INSPECTION		ACTION
26	Implement PID/DATA MONITOR AND RECORD (FHO2S) from DIAGNOSTIC DATA LINK by using NGS tester. Is voltage on heated oxygen sensor as follows while racing engine (in neutral)? • More than 0.45 V when suddenly accelerator pedal: rich condition • Less than 0.45 V during fuel cut: lean condition	Yes	Go to next step.
		No	Inspect and repair or replace faulty heated oxygen sensor (front), harness, connector or terminal. ☞ 01–40 HEATED OXYGEN SENSOR INSPECTION Then go to step 39.
27	Continue monitoring items on previous step. Is voltage of heated oxygen sensor longer at 0.45 V on rich condition?	Yes	Go to next step.
		No	Go to step 30.
28	Inspect purge control system. ☞ 01–01A ENGINE SYSTEM INSPECTION, Purge Control Inspection Is it okay?	Yes	Go to next step.
		No	By following system inspection, repair or replace faulty parts, then go to step 39.
29	Inspect positive crankcase ventilation operation. ☞ 01–16 PCV VALVE INSPECTION Is it okay?	Yes	Inspect on fuel leakage and injection amount. ☞ 01–14 FUEL INJECTOR INSPECTION Replace faulty fuel injector, then go to step 39.
		No	Replace positive crankcase ventilation valve, then go to step 39.
30	Inspect for air suction at followings: • From air cleaner to throttle body • From throttle body to dynamic chamber • From dynamic chamber to intake manifold Visually inspect cracks, and damages, and check fluctuation after spraying rust penetrating agent, then select air suction area. Can air suction be confirmed?	Yes	Repair or replace source of air suction, then go to step 39.
		No	Go to next step.
31	Inspect for air suction on vacuum hose which has negative pressure on intake manifold, same way as previous step. Can air suction be confirmed?	Yes	Repair or replace source of air suction, then go to step 39.
		No	Go to next step.
32	Inspect fuel line pressure under trouble condition. ☞ 01–01A ENGINE SYSTEM INSPECTION, Fuel Line Pressure Inspection Is fuel line pressure okay?	Yes	Inspect on fuel leakage and injection amount. ☞ 01–14 FUEL INJECTOR INSPECTION Replace faulty fuel injector, then go to step 39.
		No	Go to next step.
33	Inspect fuel pump maximum pressure. ☞ 01–14 FUEL PUMP INSPECTION, Fuel Pump Maximum Pressure Is it okay?	Yes	Go to next step.
		No	Replace fuel pump, then go to step 39.
34	Inspect pulsation damper for leaks and clogging. Is it okay?	Yes	Go to next step.
		No	Replace pulsation damper, then go to step 39.
35	Inspect for clogging at fuel filter (high-pressure side). Is there any foreign material in fuel on fuel pump side of filter?	Yes	Go to next step.
		No	Go to step 37.
36	Inspect inside of fuel tank for foreign materials and stain. Is inside of fuel tank okay?	Yes	Replace fuel filter (high-pressure side), then go to step 39.
		No	Clean inside of fuel tank and fuel filter (low-pressure side). Replace fuel filter (high-pressure side), then go to step 39.
37	Inspect for leaks and clogging in fuel hose from fuel distributor to fuel pump. Is it okay?	Yes	Go to next step.
		No	Repair or replace source of fuel leaks or clogging, then go to step 39.
38	Inspect for leaks in fuel hose from fuel filter (high-pressure side) to fuel tank return side. Is it okay?	Yes	Replace pressure regulator, then go to next step.
		No	Repair or replace source of fuel leaks, then go to next step.

STEP	INSPECTION		ACTION
39	Clear DTC. Verify stored PENDING TROUBLE CODE and DTC, after running under DRIVE MODE. Is there any PENDING TROUBLE CODE and/or DTC stored?	Yes	Go to applicable DTC inspection. **Note** • If malfunction remains even though all inspections have been performed, get assistance from Technical Hotline/your distributor.
		No	Troubleshooting completed.

DTC	P0301, P0302, P0303, P0304	Cylinder 1—4 misfire detected
DETECTION CONDITION	PCM input signal from crankshaft position sensor signal for cylinder No.1, 2, 3 or 4 is irregular	
POSSIBLE CAUSE	• Ignition timing without specification • Air gap of crankshaft position sensor without specification • Ignition coil malfunction • Ignition control module malfunction • High-tension lead malfunction • Spark plug malfunction • Fuel injector malfunction • Fuel pump malfunction • Fuel filter clogged • Fuel delivery hose clogged or leaking • Fuel return hose clogged • Pressure regulator malfunction • Pulsation damper malfunction • Purge solenoid valve malfunction • Positive crankcase ventilation valve malfunction • Leakage in intake-air system • Insufficient compression • EGR system malfunction • Vibration of drive unit • Excessive load of A/C compressor, power steering oil pump, and generator • Mass air flow sensor malfunction • Engine coolant temperature sensor malfunction • Intake air temperature sensor malfunction • Crankshaft position sensor malfunction • Camshaft position sensor malfunction • Throttle position sensor malfunction • Heated oxygen sensor (front) malfunction • Vehicle speed sensor malfunction • Break switch malfunction • Open or short circuit in wiring harness • Poor connection of connector • Vacuum hoses damaged or loose **Warning** **The following troubleshooting flow chart contains the fuel system diagnosis and repair procedures. Read the following warnings before performing the fuel system services:** • **Fuel vapor is hazardous. It can easily ignite, causing serious injury and damage. Always keep sparks and flames away from fuel.** • **Fuel line spills and leaks are dangerous. Fuel can ignite and cause serious injuries or death and damage. Fuel can also irritate skin and eyes. To prevent this, always complete "BEFORE REPAIR PROCEDURE" and "AFTER REPAIR PROCEDURE" described in this manual.** **☞ 01–14 BEFORE REPAIR PROCEDURE** **☞ 01–14 AFTER REPAIR PROCEDURE**	

STEP	INSPECTION		ACTION
1	Has FREEZE FRAME PID DATA been recorded?	Yes	Go to next step.
		No	Record FREEZE FRAME PID DATA on repair order, then go to next step.

STEP	INSPECTION		ACTION
2	Verify stored DTC. Have DTCs P0102, P0103, P0111, P0112, P0113, P0117, P0118, P0122, P0123, P0335, P0443, P0500, P0703, P1102, P1103, P1122, P1123, P1496, P1497, P1498 and/or P1499 been stored?	Yes	Inspect and repair DTC P0102, P0103, P0111, P0112, P0113, P0117, P0118, P0122, P0123, P0335, P0443, P0500, P0703, P1102, P1103, P1122, P1123, P1496, P1497, P1498 or P1499, then go to step 36.
		No	Go to next step.
3	Is DTC P0301, P0302, P0303 or P0304 on FREEZE FRAME PID DATA?	Yes	Go to next step.
		No	Inspect and repair DTC on FREEZE FRAME PID DATA, then go to step 35.
4	Temporarily clear DTC. Race engine 2 to 3 times in neutral. Then verify RPM, LOAD, ECT and VSS on FREEZE FRAME PID DATA. Operate under condition simulating constant drives for length that allows engine to revolve 1,000 times. For example, at 2,000 rpm, 1,000 × 60/ 2,000 = more than 30 seconds. Is P0300 set on PENDING TROUBLE CODE? **Note** • Adjust electrical load, A/C load, and AT range or MT gear position to simulate condition reported by customer.	Yes	Trouble is in process. Go to step 6.
		No	Go to next step.
5	Drive vehicle under condition reported by customer. For example, speed, acceleration, AT range or MT gear position, rough or winding road at which MIL illuminates. Are P0301, P0302, P0303 or P0304 set on either PENDING TROUBLE CODE or DTC?	Yes	Trouble is in process. Go to next step.
		No	Go to "01–01A ENGINE SYMPTOM TROUBLESHOOTING, INTERMITTENT CONCERNS".
6	Implement PID/DATA MONITOR AND RECORD (RPM, TP V, ECT V IAT V, MAF V, BRK SW, VS) from DIAGNOSTIC DATA LINK by using NGS tester. Is there any signal that is far out of specification when ignition switch is at ON, and run engine at idle?	Yes	Implement "01–01A ENGINE DIAGNOSTIC INSPECTION, Input System Investigation Procedure" and repair or replace, then go to step 36.
		No	Go to next step.
7	Continue monitoring items on previous step. Is there any input signal which causes drastic changes when it is set to be in trouble condition?	Yes	Implement "01–01A ENGINE DIAGNOSTIC INSPECTION, Input System Investigation Procedure" and repair or replace, then go to step 36.
		No	Go to next step.
8	Exchange faulty spark plugs with plugs on other cylinders, then drive under trouble condition. Is misfire detection DTC or PENDING TROUBLE CODE on cylinder which faulty spark plugs are placed, stored?	Yes	Replace faulty spark plug, then go to step 36.
		No	Go to next step.
9	Verify blinking condition on faulty cylinders by setting timing light on high-tension lead under trouble condition. Does it blink regularly and stable? **Note** • When it occurs at idle, inspect spark plugs on faulty cylinders and verify that sparks are stable.	Yes	Go to step 13.
		No	Go to next step.
10	Inspect high-tension lead for installation, condition, corrosion on terminal, open harness, and damaged cover. Are they okay?	Yes	Go to next step.
		No	Repair or replace faulty high-tension lead, then go to step 36.
11	Inspect resistance of ignition coil. ☞ 01–18 IGNITION COIL INSPECTION Is it okay?	Yes	Go to next step.
		No	Replace ignition coil, then go to step 36.

STEP	INSPECTION		ACTION
12	Inspect ignition control module. ☞ 01–18 IGNITION CONTROL MODULE INSPECTION Is it okay?	Yes	Inspect harness for poor connection, contacting body and wear from ignition control module to PCM. Repair faulty harness, then go to step 36.
		No	Replace ignition coil, then go to step 36.
13	Carry out IDLING TEST from SIMULATION TEST by using NGS tester. Turn off faulty injectors and compare decrease in engine speeds with injectors on other cylinders. Is collapse on running speed of faulty cylinder lesser than others?	Yes	Go to next step.
		No	Go to step 15.
14	Inspect for open, poor connection and other problems on following harnesses, connectors and terminals (for fuel injector at faulty cylinder): • From main relay to fuel injector • From fuel injector to PCM Is there any trouble?	Yes	Repair or replace faulty harness, connector or terminal, then go to step 36.
		No	Replace fuel injector, then go to step 36.
15	Inspect ignition timing. ☞ 01–10 ENGINE TUNE-UP, Ignition Timing Is it okay?	Yes	Go to step 18.
		No	Go to next step.
16	Adjust ignition timing. ☞ 01–10 ENGINE TUNE-UP, Ignition Timing Is it adjusted properly?	Yes	Go to step 36.
		No	Go to next step.
17	Inspect camshaft position sensor. ☞ 01–40 CAMSHAFT POSITION SENSOR INSPECTION Is it okay?	Yes	Inspect installation condition and damages on timing belt and gears, repair faulty parts, then go to step 36.
		No	Replace camshaft position sensor, then go to step 36.
18	Inspect crankshaft position sensor for loose installation and air gap. Is it okay?	Yes	Go to next step.
		No	Install crankshaft position sensor properly or adjust air gap. ☞ 01–40 CRANKSHAFT POSITION SENSOR ADJUSTMENT Then go to step 36.
19	Inspect crankshaft pulley for loose or unstable installation, and shape or installation condition of sensor plate. Is it okay?	Yes	Go to next step.
		No	Repair or replace faulty parts, then go to step 36.
20	Remove radiator cap. Implement procedure to bleed air from engine coolant, then run engine at idle. Is there any small bubble which makes engine coolant white at filling opening? **Note** • Large bubbles are normal since they are remaining air coming out from engine coolant passage.	Yes	Air gets in from poor sealing on head gasket or other areas between combustion chamber and engine coolant passage. Repair or replace faulty parts, then go to step 36.
		No	Go to next step.
21	Inspect engine compression. ☞ 01–10 COMPRESSION INSPECTION Is it okay?	Yes	Go to next step.
		No	Implement engine overhaul, then go to step 36.
22	Inspect EGR control system. ☞ 01–01A ENGINE SYSTEM INSPECTION, EGR Control Inspection Is it okay?	Yes	Go to next step.
		No	By following system inspection, repair or replace faulty parts, then go to step 36.
23	Implement PID/DATA MONITOR AND RECORD (FHO2S) from DIAGNOSTIC DATA LINK by using NGS tester. Is voltage on heated oxygen sensor as follows while racing engine (in neutral)? • More than 0.45 V when suddenly accelerator pedal: rich condition • Less than 0.45 V during fuel cut: lean condition	Yes	Go to next step.
		No	Inspect and repair or replace faulty heated oxygen sensor (front), harness, connector or terminal. ☞ 01–40 HEATED OXYGEN SENSOR INSPECTION Then go to step 36.

STEP	INSPECTION		ACTION
24	Continue monitoring items on previous step. Is voltage of heated oxygen sensor longer at 0.45 V on rich condition?	Yes	Go to next step.
		No	Go to step 27.
25	Inspect purge control system. ☞ 01–01A ENGINE SYSTEM INSPECTION, Purge Control Inspection Is it okay?	Yes	Go to next step.
		No	By following system inspection, repair or replace faulty parts, then go to step 36.
26	Inspect positive crankcase ventilation operation. ☞ 01–16 PCV VALVE INSPECTION Is it okay?	Yes	Inspect on fuel leakage and injection amount. ☞ 01–14 FUEL INJECTOR INSPECTION Replace faulty fuel injector, then go to step 36.
		No	Replace positive crankcase ventilation valve, then go to step 36.
27	Inspect for air suction at followings: • From air cleaner to throttle body • From throttle body to dynamic chamber • From dynamic chamber to intake manifold Visually inspect cracks, and damages, and check fluctuation after spraying rust penetrating agent, then select air suction area. Can air suction be confirmed?	Yes	Repair for replace source of air suction, then go to step 36.
		No	Go to next step.
28	Inspect for air suction on vacuum hose which has negative pressure on intake manifold, same way as previous step. Can air suction be confirmed?	Yes	Repair or replace source of air suction, then go to step 36.
		No	Go to next step.
29	Inspect fuel line pressure under trouble condition. ☞ 01–01A ENGINE SYSTEM INSPECTION, Fuel Line Pressure Inspection Is fuel line pressure okay?	Yes	Inspect on fuel leakage and injection amount. ☞ 01–14 FUEL INJECTOR INSPECTION Replace faulty fuel injector, then go to step 36.
		No	Go to next step.
30	Inspect fuel pump maximum pressure. ☞ 01–14 FUEL PUMP INSPECTION, Fuel Pump Maximum Pressure Is it okay?	Yes	Go to next step.
		No	Replace fuel pump, then go to step 36.
31	Inspect pulsation damper for leaks and clogging. Is it okay?	Yes	Go to next step.
		No	Replace pulsation damper, then go to step 36.
32	Inspect for clogging on fuel filter (high-pressure side). Is there any foreign material in fuel on fuel pump side of filter?	Yes	Go to next step.
		No	Go to step 34.
33	Inspect inside of fuel tank for foreign materials and stain. Is inside of fuel tank okay?	Yes	Replace fuel filter (high-pressure side), then go to step 36.
		No	Clean inside of fuel tank and fuel filter (low-pressure side). Replace fuel filter (high-pressure side), then go to step 36.
34	Inspect for leaks and clogging in fuel hose from fuel distributor to fuel pump. Is it okay?	Yes	Go to next step.
		No	Repair or replace source of fuel leaks or clogging, then go to step 36.
35	Inspect for leaks in fuel hose from fuel filter (high-pressure side) to fuel tank (return side). Is it okay?	Yes	Replace pressure regulator, then go to next step.
		No	Repair or replace source of fuel leaks, then go to next step.
36	Clear DTC. Verify stored PENDING TROUBLE CODE and DTC, after running under DRIVE MODE. Is there any PENDING TROUBLE CODE and/or DTC stored?	Yes	Go to applicable DTC inspection. **Note** • If malfunction remains even though all inspections have been performed, get assistance from Technical Hotline/your distributor.
		No	Troubleshooting completed.

DTC P0325	Knock sensor circuit malfunction
DETECTION CONDITION	Input voltage from knock sensor is below 1.25 V or above 3.75 V after engine started
POSSIBLE CAUSE	• Knock sensor malfunction • Knock sensor installation incorrect • Open or short circuit in wiring from PCM terminal 2F to knock sensor terminal A

STEP	INSPECTION		ACTION
1	Have FREEZE FRAME PID DATA been recorded?	Yes	Go to next step.
		No	Record FREEZE FRAME PID DATA on repair order, then go to next step.
2	Does knock sensor connector or PCM connector have poor connection?	Yes	Repair or replace connector, then go to step 6.
		No	Go to next step.
3	Disconnect knock sensor connector. Is there continuity between connector terminal A and PCM terminal 2F?	Yes	Go to next step.
		No	Repair or replace wiring harness, then go to step 6.
4	Is resistance of knock sensor okay? ☞ 01–40 KNOCK SENSOR INSPECTION	Yes	Go to next step.
		No	Repair or replace knock sensor, then go to step 6.
5	Clear diagnostic trouble code from memory. Is same code No. present after performing "After Repair Procedure"?	Yes	Get assistance from Technical Hotline, then replace PCM if necessary.
		No	Intermittent poor connection in harness or connector. Repair connector and/or harness, then go to next step.
6	Clear diagnostic trouble code from memory. Is there any diagnostic trouble code present after performing "After Repair Procedure"?	Yes	Go to applicable DTC inspection.
		No	Troubleshooting completed.

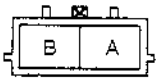

HARNESS SIDE CONNECTOR
(VIEW FROM TERMINAL SIDE)

X5U101WDP

DTC P0335	Crankshaft position sensor circuit malfunction
DETECTION CONDITION	• No NE signal input from crankshaft position sensor while engine is running
POSSIBLE CAUSE	• Crankshaft position sensor malfunction • Crankshaft position sensor air gap incorrect • Open or short circuit in wiring from PCM terminal 2J to crankshaft position sensor terminal B • Open or short circuit in wiring from main relay terminal D to crankshaft position sensor terminal A

STEP	INSPECTION		ACTION
1	Have FREEZE FRAME PID DATA been recorded?	Yes	Go to next step.
		No	Record FREEZE FRAME PID DATA on repair order, then go to next step.
2	Does crankshaft position sensor connector or PCM connector have poor connection?	Yes	Repair or replace connector, then go to step 7.
		No	Go to next step.
3	Disconnect crankshaft position sensor connector. Is there continuity between connector terminal B and PCM terminal 2J? Is there any continuity between connector terminal A and main relay terminal D?	Yes	Go to next step.
		No	Repair or replace wiring harness, then go to step 7.
4	Is crankshaft position sensor air gap okay? **Specification: 0.5—1.5 mm {0.020—0.059 in}**	Yes	Go to next step.
		No	Adjust crankshaft position sensor air gap, then go to step 7.
5	Is crankshaft position sensor okay? ☞ 01–40 CRANKSHAFT POSITION SENSOR INSPECTION	Yes	Go to next step.
		No	Replace crankshaft position sensor, then go to step 7.

STEP	INSPECTION		ACTION
6	Clear diagnostic trouble code from memory. Is same code No. present after performing "After Repair Procedure"?	Yes	Get assistance from Technical Hotline/your distributor, then replace PCM if necessary.
		No	Intermittent poor connection in harness or connector. Repair connector and/or harness, then go to next step.
7	Clear diagnostic trouble code from memory. Is there any diagnostic trouble code present after performing "After Repair Procedure"?	Yes	Go to applicable DTC inspection.
		No	Troubleshooting completed.

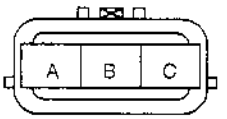

HARNESS SIDE CONNECTOR
(VIEW FROM TERMINAL CONNECTOR)

X5U101WDO

DTC P0339	Crankshaft position sensor circuit intermittent
DETECTION CONDITION	Crankshaft position sensor outputs less than or more 8 pulses while the crankshaft rotates twice
POSSIBLE CAUSE	• Crankshaft position sensor malfunction • Crankshaft position sensor air gap incorrect • Intermittent open or short circuit in wiring harness from PCM terminal 2J to crankshaft position sensor terminal B • Intermittent open or short circuit in wiring harness from main relay terminal D to crankshaft position sensor terminal A • Damaged crankshaft pulley

STEP	INSPECTION		ACTION
1	Has FREEZE FRAME PID DATA been recorded?	Yes	Go to next step.
		No	Record FREEZE FRAME PID DATA on repair order, then go to next step.
2	Are crankshaft position sensor and PCM connector s and terminals okay?	Yes	Repair or replace connector or terminal, then go to step 8.
		No	Go to next step.
3	Inspect the any damages of the crankshaft pulley teeth. Are the crankshaft pulley teeth okay?	Yes	Go to next step.
		No	Replace the crankshaft pulley, then go to step 8.
4	Measure the air gap between the crankshaft position sensor and teeth of crankshaft pulley. Is air gap within specifications? **Specification: 0.5—1.5 mm {0.020—0.059 in}**	Yes	Go to next step.
		No	Adjust the crankshaft position sensor air gap, then go to step 8.
5	Disconnect the crankshaft position sensor, main relay and PCM connectors. Check for intermittent open circuit between the following terminals while wiggle and pull each wiring harness: • PCM connector terminal 2J and crankshaft position sensor connector terminal B • Main relay connector and crankshaft position sensor connector terminal A Are all wiring harnesses okay?	Yes	Go to next step.
		No	Repair or replace the wiring harness, then go to step 8.
6	Check if there is continuity between the crankshaft position sensor connector terminals while wiggle and pull each wiring harnesses. Is there continuity?	Yes	There is a short circuit. Repair or replace the wiring harness, then go to step 8.
		No	Go to next step.
7	Clear diagnostic trouble code from memory. Is same code No. present after performing "After repair procedure"?	Yes	Replace the crankshaft position sensor, then go to next step. If same diagnostic code is retrieved, get assistance from Technical Hotline/your distributor, then replace PCM if necessary.
		No	Go to next step.

STEP	INSPECTION		ACTION
8	Clear diagnostic trouble code from memory. Is there any diagnostic trouble code present after performing "After repair procedure"?	Yes	Go to applicable DTC inspection.
		No	Troubleshooting completed.

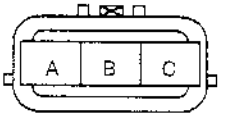

HARNESS SIDE CONNECTOR
(VIEW FROM TERMINAL CONNECTOR)

X5U101WDR

DTC P0401	Exhaust gas recirculation flow insufficient detected
DETECTION CONDITION	Difference in intake manifold pressure when EGR is operated and when it is stopped is too small
POSSIBLE CAUSE	• EGR valve malfunction • EGR boost sensor malfunction • EGR boost sensor solenoid valve malfunction • Clogging or leakage in piping of EGR system • Mass air flow sensor malfunction • Throttle position sensor malfunction • Intake air temperature sensor malfunction • Vehicle speed sensor malfunction • Open or short circuit in wiring harness • Vacuum hoses damaged or loose

STEP	INSPECTION		ACTION
1	Has FREEZE FRAME PID DATA been recorded?	Yes	Go to next step.
		No	Record FREEZE FRAME PID DATA on repair order, then go to next step.
2	Verify stored DTC. Have DTCs P0102, P0103, P0106, P0107, P0108, P0111, P0112, P0113, P0122, P0123, P1102, P1103, P1122, P1123, P1487, P1496, P1497, P1498 and/or P1499 been stored?	Yes	Inspect and repair DTC P0102, P0103, P0106, P0107, P0108, P0111, P0112, P0113, P0122, P0123, P1102, P1103, P1122, P1123, P1487, P1496, P1497, P1498 or P1499, then go to step 15.
		No	Go to next step.
3	Inspect intake manifold negative pressure at idle. ☞ 01–01A ENGINE SYSTEM INSPECTION, Intake Manifold Vacuum Inspection Is it okay?	Yes	Go to next step.
		No	Repair or replace source of air suction, then go to step 15.
4	Is DTC P0401 on FREEZE FRAME PID DATA?	Yes	Go to next step.
		No	Go to step 6.
5	Temporarily clear DTC. Verify RPM, LOAD, ECT and VSS on FREEZE FRAME PID DATA. Operate constant driving to be same condition. ☞ DRIVE MODE Is TEST # 10:41:00 less than MIN value on DIAGNOSTIC MONITORING TEST RESULTS?	Yes	Trouble is in process. Go to step 7.
		No	Go to "01–01A ENGINE SYMPTOM TROUBLESHOOTING, INTERMITTENT CONCERNS".
6	Temporarily clear DTC. Perform test drive by referring customers questionnaire and DRIVE MODE. Is TEST # 10:41:00 less than MIN value on DIAGNOSTIC MONITORING TEST RESULTS?	Yes	Trouble is in process. Go to next step.
		No	Go to "01–01A ENGINE SYMPTOM TROUBLESHOOTING, INTERMITTENT CONCERNS".
7	Implement PID/DATA MONITOR AND RECORD (BARO V, IAT V, MAF V, RPM, TP V, VS) from DIAGNOSTIC DATA LINK by using NGS tester. Is there any signal that is far out of specification when ignition switch is at ON, and run engine at idle?	Yes	Implement "01–01A ENGINE DIAGNOSTIC INSPECTION, Input System Investigation Procedure" and repair or replace, then go to step 15.
		No	Go to next step.

STEP	INSPECTION		ACTION
8	Continue monitoring items on previous step. Is there any input signal which causes drastic changes when they are driven stable for approx. 1 minute under same trouble condition? **Note** • While EGR is diagnosing, it is normal that switches BARO V over from barometric pressure to intake manifold negative pressure, do not misdiagnose it.	Yes	Implement "01–01A ENGINE DIAGNOSTIC INSPECTION, Input System Investigation Procedure" and repair or replace, then go to step 15.
		No	Go to next step.
9	Carry out IGNITION ON TEST from SIMULATION TEST by using NGS tester. Is EGR boost sensor solenoid operating sound heard when EGRBV is turned from OFF to ON?	Yes	Go to next step.
		No	Go to step 13.
10	Carry out IDLING TEST from SIMULATION TEST by using NGS tester. Disconnect vacuum hose on EGR boost sensor, then switch EGRBV from OFF to ON and measuring pressure on vacuum hose using vacuum gauge. Is the pressure change from barometric to intake manifold?	Yes	Go to step 14.
		No	Go to next step.
11	Inspect for loose connection, miss connection, clogging, cracking or broken on following hoses using vacuum pump: • From dynamic chamber to EGR boost sensor solenoid valve • From EGR boost sensor solenoid valve to EGR boost sensor Is there any trouble?	Yes	Repair or replace faulty parts, then go to step 15.
		No	Go to next step.
12	Inspect EGR boost sensor solenoid for valve damage, air leak and air tightness. ☞ 01–16 EGR BOOST SENSOR SOLENOID VALVE INSPECTION Is it okay?	Yes	Inspect EGR boost passage in dynamic chamber and replace dynamic chamber if necessary, then go to step 15.
		No	Replace EGR boost sensor solenoid valve, then go to step 15.
13	Inspect for open, poor connection and other problems on following harnesses, connectors and terminals: • From main relay to EGR boost sensor solenoid valve • From EGR boost sensor solenoid valve to PCM Is there any trouble?	Yes	Repair or replace faulty harness, connector or terminal, then go to step 15.
		No	Replace EGR boost sensor solenoid valve, then go to step 15.
14	Inspect EGR control system. ☞ 01–01A ENGINE SYSTEM INSPECTION, EGR Control Inspection Is it okay?	Yes	Remove and clean carbon stuck in EGR valve, dynamic chamber, and EGR system passage of exhaust side pipe. Assemble it properly, then go to next step. Also clean EGR boost sensor solenoid side passage.
		No	Repair or replace faulty parts, then go to next step.
15	Clear DTC. Drive constantly under trouble reiteration condition. ☞ DRIVE MODE Is TEST # 10:41:00 out of specification on DIAGNOSTIC MONITORING TEST RESULTS?	Yes	Go to next step.
		No	Go back to step 2. **Note** • If malfunction remains even though all inspections have been performed, get assistance from Technical Hotline/your distributor.
16	Verify stored PENDING TROUBLE CODE, DTC and DIAGNOSTIC MONITORING TEST RESULTS. Is there any code stored and/or out of specification?	Yes	Go to applicable DTC inspection.
		No	Troubleshooting completed.

DTC P0402	Exhaust gas recirculation flow excessive detected
DETECTION CONDITION	Difference in intake manifold pressure when EGR is operated and when it is stopped is too large
POSSIBLE CAUSE	• EGR valve malfunction • EGR boost sensor malfunction • Mass air flow sensor malfunction • Throttle position sensor malfunction • Intake air temperature sensor malfunction • Vehicle speed sensor malfunction • Open or short circuit in wiring harness • Vacuum hoses damaged or loose

STEP	INSPECTION		ACTION
1	Has FREEZE FRAME PID DATA been recorded?	Yes	Go to next step.
		No	Record FREEZE FRAME PID DATA on repair order, then go to next step.
2	Verify stored DTC. Have DTCs P0102, P0103, P0106, P0107, P0108, P0111, P0112, P0113, P0122, P0123, P1102, P1103, P1122, P1123, P1487, P1496, P1497, P1498 and/or P1499 been stored?	Yes	Inspect and repair DTC P0102, P0103, P0106, P0107, P0108, P0111, P0112, P0113, P0122, P0123, P1102, P1103, P1122, P1123, P1487, P1496, P1497, P1498 or P1499, then go to step 9.
		No	Go to next step.
3	Inspect intake manifold negative pressure at idle. ☞ 01–01A ENGINE SYSTEM INSPECTION, Intake Manifold Vacuum Inspection. Is it okay?	Yes	Go to next step.
		No	Repair or replace source of air suction, then go to step 9.
4	Is DTC P0402 on FREEZE FRAME PID DATA?	Yes	Go to next step.
		No	Go to step 6.
5	Temporarily clear DTC. Verify RPM, LOAD, ECT and VSS on FREEZE FRAME PID DATA. Operate constant driving to be same condition. ☞ DRIVE MODE Is TEST # 10:41:00 greater than MAX value on DIAGNOSTIC MONITORING TEST RESULTS?	Yes	Trouble is in process. Go to step 7.
		No	Go to "01–01A ENGINE SYMPTOM TROUBLESHOOTING, INTERMITTENT CONCERNS".
6	Temporarily clear DTC. Perform test drive by referring customers questionnaire and DRIVE MODE. Is TEST # 10:41:00 greater than MAX value on DIAGNOSTIC MONITORING TEST RESULTS?	Yes	Trouble is in process. Go to next step.
		No	Go to "01–01A ENGINE SYMPTOM TROUBLESHOOTING, INTERMITTENT CONCERNS".
7	Implement PID/DATA MONITOR AND RECORD (BARO V, IAT V, MAF V, RPM, TPS V, VS) from DIAGNOSTIC DATA LINK by using NGS tester. Is there any signal that is far out of specification when ignition switch is at ON, and run engine at idle?	Yes	Implement "01–01A ENGINE DIAGNOSTIC INSPECTION, Input System Investigation Procedure" and repair or replace, then go to step 9.
		No	Go to next step.
8	Inspect EGR control system. ☞ 01–01A ENGINE SYSTEM INSPECTION, EGR Control Inspection Is it okay?	Yes	Remove and clean carbon stuck in EGR valve, dynamic chamber, and EGR system passage of exhaust side pipe. Assemble it properly, then go to next step. Also clean EGR boost sensor solenoid side passage.
		No	Repair or replace faulty parts, then go to next step.
9	Clear DTC. Drive constantly under trouble reiteration condition. ☞ DRIVE MODE Is TEST # 10:41:00 out of specification on DIAGNOSTIC MONITORING TEST RESULTS?	Yes	Go to next step.
		No	Go back to step 2. **Note** • If malfun ction remains even though all inspections have been performed, get assistance from Technical Hotline/your distributor.
10	Verify stored PENDING TROUBLE CODE, DTC and DIAGNOSTIC MONITORING TEST RESULTS. Is there any code stored and/or out of specification?	Yes	Go to applicable DTC inspection.
		No	Troubleshooting completed.

DTC P0420*2	Warm up catalyst system efficiency below threshold
DETECTION CONDITION	Number of heated oxygen sensor (rear) inversion becomes closer to that of heated oxygen sensor (front)
POSSIBLE CAUSE	• Warm up three way catalytic converter deterioration • Leakage exhaust system • Heated oxygen sensor (front) malfunction • Heated oxygen sensor (rear) malfunction • Mass air flow sensor malfunction • Throttle position sensor malfunction • Vehicle speed sensor malfunction

STEP	INSPECTION		ACTION
1	Have FREEZE FRAME PID DATA and DIAGNOSTIC MONITORING TEST RESULTS been recorded?	Yes	Go to next step.
		No	Record FREEZE FRAME PID DATA and DIAGNOSTIC MONITORING TEST RESULTS on repair order, then go to next step.
2	Verify stored DTC. Have DTCs P0100, P0120 and/or P0500 been stored?	Yes	Inspect and repair DTC P0100, P0120 or P0500, then go to step 11.
		No	Go to next step.
3	Is DTC P0420 on FREEZE FRAME PID DATA?	Yes	Go to next step.
		No	Inspect and repair DTC on FREEZE FRAME PID DATA, then go to step 11.
4	Temporarily clear DTC. Run DRIVE MODE. Is TEST # 10:11:11 less than MIN value on DIAGNOSTIC MONITORING TEST RESULTS?	Yes	Trouble is in process. Go to next step.
		No	Go to "01–01A ENGINE SYSTEM TROUBLESHOOTING, INTERMITTENT CONCERNS".
5	Implement PID/DATA MONITOR AND RECORD (MAF V, RPM, TP V, VS) from DIAGNOSTIC DATA LINK by using NGS tester. Is there any signal that is far out of specification when ignition switch is at ON, and run engine at idle?	Yes	Implement "01–01A ENGINE DIAGNOSTIC INSPECTION, Input System Investigation Procedure" and repair or replace, then go to step 11.
		No	Go to next step.
6	Continue monitoring items on previous step. Is there any input signal which causes drastic changes when it is set to be in trouble condition?	Yes	Implement "01–01A ENGINE DIAGNOSTIC INSPECTION, Input System Investigation Procedure" and repair or replace, then go to step 11.
		No	Go to next step.
7	Inspect exhaust system. Is there any gas leak?	Yes	Repair or replace faulty exhaust parts, then go to step 11.
		No	Go to next step.
8	Inspect installation of heated oxygen sensor (rear). Is it okay?	Yes	Go to next step.
		No	Install heated oxygen sensor (rear) properly, then go to step 11.
9	Inspect heated oxygen sensor (rear), and related harness, connector and terminal. ☞ 01–40 HEATED OXYGEN SENSOR INSPECTION Is it okay?	Yes	Go to next step.
		No	Repair or replace heated oxygen sensor (rear), harness, connector or terminal, then go to step 11.
10	Inspect heated oxygen sensor heater (rear) and related harness, connector and terminal. ☞ 01–40 HEATED OXYGEN SENSOR INSPECTION Is it okay?	Yes	Replace catalytic converter, then go to next step.
		No	Repair or replace faulty heated oxygen sensor (rear), harness, connector or terminal, then go to next step.
11	Clear DTC. Run DRIVE MODEL. Is TEST # 10:11:11 more than MIN value on DIAGNOSTIC MONITORING TEST RESULTS?	Yes	Go to next step.
		No	Go back to step 2. **Note** • If malfunction remains even though all inspections have been performed, get assistance from Technical Hotline/your distributor.

STEP	INSPECTION		ACTION
12	Verify stored PENDING TROUBLE CODE, DTC and DIAGNOSTIC MONITORING TEST RESULTS. Is there any code stored and/or out of specification?	Yes	Go to applicable DTC inspection.
		No	Troubleshooting completed.

*2 : Except California emission regulations applicable model

DTC P0421*1	Warm up catalyst system efficiency below threshold
DETECTION CONDITION	Number of heated oxygen sensor (rear) inversion becomes closer to that of heated oxygen sensor (front)
POSSIBLE CAUSE	• Warm up three way catalytic converter deterioration • Leakage exhaust system • Heated oxygen sensor (front) malfunction • Heated oxygen sensor (rear) malfunction • Mass air flow sensor malfunction • Throttle position sensor malfunction • Vehicle speed sensor malfunction

STEP	INSPECTION		ACTION
1	Have FREEZE FRAME PID DATA and DIAGNOSTIC MONITORING TEST RESULTS been recorded?	Yes	Go to next step.
		No	Record FREEZE FRAME PID DATA and DIAGNOSTIC MONITORING TEST RESULTS on repair order, then go to next step.
2	Verify stored DTC. Have DTCs P0102, P0103, P0122, P0123, P0500, P1102, P1103, P1122 and/or P1123 been stored?	Yes	Inspect and repair DTC P0102, P0103, P0122, P0123, P0500, P1102, P1103, P1122 or P1123, then go to step 11.
		No	Go to next step.
3	Is DTC P0421 on FREEZE FRAME PID DATA?	Yes	Go to next step.
		No	Inspect and repair DTC on FREEZE FRAME PID DATA, then go to step 11.
4	Temporarily clear DTC. Run DRIVE MODE. Is TEST # 10:11:11 less than MIN value on DIAGNOSTIC MONITORING TEST RESULTS?	Yes	Trouble is in process. Go to next step.
		No	Go to "01–01A ENGINE SYSTEM TROUBLESHOOTING, INTERMITTENT CONCERNS".
5	Implement PID/DATA MONITOR AND RECORD (MAF V, RPM, TP V, VS) from DIAGNOSTIC DATA LINK by using NGS tester. Is there any signal that is far out of specification when ignition switch is at ON, and run engine at idle?	Yes	Implement "01–01A ENGINE DIAGNOSTIC INSPECTION, Input System Investigation Procedure" and repair or replace, then go to step 11.
		No	Go to next step.
6	Continue monitoring items on previous step. Is there any input signal which causes drastic changes when it is set to be in trouble condition?	Yes	Implement "01–01A ENGINE DIAGNOSTIC INSPECTION, Input System Investigation Procedure" and repair or replace, then go to step 11.
		No	Go to next step.
7	Inspect exhaust system. Is there any gas leak?	Yes	Repair or replace faulty exhaust parts, then go to step 11.
		No	Go to next step.
8	Inspect installation of heated oxygen sensor (rear). Is it okay?	Yes	Go to next step.
		No	Install heated oxygen sensor (rear) properly, then go to step 11.
9	Inspect heated oxygen sensor (rear), and related harness, connector and terminal. ☞ 01–40 HEATED OXYGEN SENSOR INSPECTION Is it okay?	Yes	Go to next step.
		No	Repair or replace heated oxygen sensor (rear), harness, connector or terminal, then go to step 11.
10	Inspect heated oxygen sensor heater (rear) and related harness, connector and terminal. ☞ 01–40 HEATED OXYGEN SENSOR INSPECTION Is it okay?	Yes	Replace catalytic converter, then go to next step.
		No	Repair or replace faulty heated oxygen sensor (rear), harness, connector or terminal, then go to next step.

STEP	INSPECTION		ACTION
11	Clear DTC. Run DRIVE MODE. Is TEST # 10:11:11 more than MIN value on DIAGNOSTIC MONITORING TEST RESULTS?	Yes	Go to next step.
		No	Go back to step 2. **Note** • If malfunction remains even though all inspections have been performed, get assistance from Technical Hotline/your distributor.
12	Verify stored PENDING TROUBLE CODE, DTC and DIAGNOSTIC MONITORING TEST RESULTS. Is there any code stored and/or out of specification?	Yes	Go to applicable DTC inspection.
		No	Troubleshooting completed.

*1 : California emission regulations applicable model

DTC P0442	Evaporative emission control system malfunction (Leak check)
DETECTION CONDITION	Excessive difference in fuel tank pressures measured immediately after purge control is stopped with canister drain cut valve closed
POSSIBLE CAUSE	• Purge solenoid valve malfunction • Canister drain cut valve malfunction • Tank pressure control valve malfunction • Vent cut valve malfunction • Loose fuel filler cup • Charcoal canister malfunction • Catch tank malfunction • Rollover valve malfunction • Cracked fuel tank • Fuel tank component parts poorly installed • Evaporative hose damaged or loose • EGR boost sensor malfunction • Fuel tank level sensor malfunction • Fuel tank pressure sensor malfunction • Engine coolant temperature sensor malfunction • Intake air temperature sensor malfunction • Throttle position sensor malfunction • Mass air flow sensor malfunction • Vehicle speed sensor malfunction • Open or short circuit in wiring harness • Poor connection of connector

STEP	INSPECTION		ACTION
1	Has FREEZE FRAME PID DATA been recorded?	Yes	Go to next step.
		No	Record FREEZE FRAME PID DATA on repair order, then go to next step.
2	Verify stored DTC. Have DTCs P0102, P0103, P0111, P0112, P0123, P0117, P0118, P0122, P0123, P0335, P0443, P0500, P1102, P1103, P1122, P1123 and/or P1449 been stored?	Yes	Inspect and repair DTC P0102, P0103, P0111, P0112, P0123, P0117, P0118, P0122, P0123, P0335, P0443, P0500, P1102, P1103, P1122, P1123, P1449, then go to step 19.
		No	Go to next step.
3	Implement PID/DATA MONITOR AND RECORD (BARO V, ECT V, FTL V, FTP V, IAT V, MAF V, TP V, VS) from DIAGNOSTIC DATA LINK by using NGS tester. Is there any signal that is far out of specification when ignition switch is at ON and run engine at idle?	Yes	Implement "01–01A ENGINE DIAGNOSTIC INSPECTION, Input System Investigation Procedure" and repair or replace, then go to step 19.
		No	Go to next step.

STEP	INSPECTION		ACTION
4	Continue monitoring items on previous step. Is there any input signal which causes drastic changes when they are driven stable for approx. 1 minute under same trouble condition? **Note** • While EGR is diagnosing, it is normal that switched BARO V over from barometric pressure to intake manifold negative pressure, do not misdiagnose it.	Yes	Implement "01–01A ENGINE DIAGNOSTIC INSPECTION, Input System Investigation Procedure" and repair or replace, then go to step 19.
		No	Go to next step.
5	Verify filler cap is not either disconnected, loose or damaged. Is it okay? **Note** • When filler caps other than OEM caps are attached, it is considered malfunction.	Yes	Go to next step.
		No	Replace or properly attach filler cap, then go to step 19.
6	Implement "01–01A ENGINE SYSTEM INSPECTION, Evaporative Emission Control System Inspection, Whole system check". Does NGS tester value change under to specified readings and hold for minimum of 2 minutes?	Yes	No leaks were detected in evaporative emission control system at this time, go to step 19.
		No	Go to next step.
7	Find hose, which is led from tank pressure control valve to charcoal canister. Clamp on this hose and remove filler cap. Implement PID/DATA MONITOR AND RECORD (FTP, FTP V) from DIAGNOSTIC DATA LINK by using NGS tester. Are FTP and FTPV values same as atmospheric pressure?	Yes	Install filler cap, then go to step 9.
		No	Go to next step.
8	Inspect fuel tank pressure sensor. ☞ 01–40 FUEL TANK PRESSURE SENSOR INSPECTION Is it okay?	Yes	Go to the next step.
		No	Replace fuel tank pressure sensor, then go to step 19.
9	Implement "01–01A ENGINE SYSTEM INSPECTION, Evaporative Emission Control System Inspection, Check from charcoal canister to fuel tank". Does NGS tester value change under to specified readings and hold for a minimum of 2 minutes?	Yes	Go to step 14.
		No	Go to next step.
10	Inspect tank pressure control valve for damage and air leak. ☞ 01–16 TANK PRESSURE CONTROL VALVE INSPECTION Is it okay?	Yes	Go to next step.
		No	Replace tank pressure control valve, then go to step 19.
11	Remove fuel tank and visually inspect for damage, insufficient sealing or poorly attached accessories on fuel tank, such as fuel gauge. Is it okay?	Yes	Go to next step.
		No	Repair or replace fuel tank or sealing, then go to step 19.
12	Inspect rollover valve for damage. ☞ 01–16 ROLLOVER VALVE INSPECTION Is it okay?	Yes	Go to next step.
		No	Replace rollover valve, then go to step 19.
13	Inspect vent cut valve for leakage. ☞ 01–14 VENT CUT VALVE INSPECTION Is it okay?	Yes	Inspect and repair or replace for detached, incorrectly installed or cracked on following hoses: • From charcoal canister to vent cut valve • From vent cut valve to fuel tank Then go to step 19.
		No	Replace filler pipe component, then go to step 19.
14	Implement "01–01A ENGINE SYSTEM INSPECTION, Evaporative Emission Control System Inspection, Check from charcoal canister to purge solenoid valve". Does vacuum change under to specified readings and hold for a minimum of 2 minutes?	Yes	Go to step 18.
		No	Go to next step.

STEP	INSPECTION		ACTION
15	Remove catch tank and inspect for plugging, damages and pinhole using vacuum pump. Is it okay?	Yes	Go to next step.
		No	Replace catch tank, then go to step 19.
16	Inspect purge solenoid valve for damage and air leak. ☞ 01–16 PURGE SOLENOID VALVE INSPECTION Is it okay?	Yes	Go to next step.
		No	Replace purge solenoid valve, then go to step 19.
17	Remove charcoal canister and inspect for damage and pinhole. ☞ 01–16 CHARCOAL CANISTER INSPECTION Is it okay?	Yes	Go to next step.
		No	Replace charcoal canister, then go to step 19.
18	Inspect canister drain cut valve for damage and air leak. ☞ 01–16 CANISTER DRAIN CUT VALVE INSPECTION Is it okay?	Yes	Inspect and repair or replace for detached, incorrectly installed or cracked hoses from charcoal canister to canister drain cut valve. Then go to next step.
		No	Replace canister drain cut valve, then go to next step.
19	Implement PID/DATA MONITOR AND RECORD from DIAGNOSTIC DATA LINK by using NGS tester. Verify that following PID's are within indicated ranges when ignition switch is at ON. • BAROV 72.0 kPa {21.3 inHg} or higher • ECTV 0—35 °C {32—95 °F} • IAT 10—60 °C {50—140 °F} Verify that fuel gauge reads within 1/4—3/4 of tank. Were readings within indicated ranges?	Yes	Correct condition, then go to next step.
		No	Take corrective action, then go to next step. **Note** • Readings need to be in the indicated ranges to perform DRIVE MODE.
20	Clear DTC. Run DRIVE MODE. ☞ 01–01A ENGINE DIAGNOSTIC INSPECTION, Fuel Tank Pressure Graph Recording Procedure Verify that CDCV and FTP graphs. Is there any problem detected?	Yes	Go back to step 2. **Note** • If malfunction remains even though all inspections have been performed, get assistance from Technical Hotline/your distributor.
		No	Go to next step.
21	Verify TEST # 10:21:00 on DIAGNOSTIC MONITORING TEST RESULTS. Is it below MAX value?	Yes	Go to next step.
		No	Go back to step 2. **Note** • If malfunction remains even though all inspections have been performed, get assistance from Technical Hotline/your distributor.
22	Verify stored PENDING TROUBLE CODE, DTC and DIAGNOSTIC MONITORING TEST RESULTS. Is there any code stored and/or out of specification?	Yes	Go to appropriate DTC inspection.
		No	Troubleshooting completed.

DTC P0443	Evaporative emission control system purge control valve circuit malfunction (Equip leak check)
DETECTION CONDITION	• Voltage when solenoid valve is ON is too low • Voltage when solenoid valve is OFF is too high
POSSIBLE CAUSE	• Purge solenoid valve malfunction • Open or short circuit in wiring from purge solenoid valve terminal A to main relay terminal D • Open or short circuit in wiring from purge solenoid valve terminal B to PCM terminal 3L

STEP	INSPECTION		ACTION
1	Does purge solenoid valve connector or PCM connector have poor connection?	Yes	Repair or replace connector, then go to step 9.
		No	Go to next step.

STEP	INSPECTION		ACTION
2	Is purge solenoid valve okay? ☞ 01–16 PURGE SOLENOID VALVE INSPECTION	Yes	Go to next step.
		No	Repair or replace as necessary, then go to step 9.
3	Verify that evaporative hose between purge solenoid valve and intake manifold damaged or clogged. Is evaporative hose okay?	Yes	Go to next step.
		No	Repair or replace as necessary, then go to step 9.
4	Implement PID/DATA MONITOR AND RECORD (PRG V) of DIAGNOSTIC DATA LINK by using NGS tester. Does it operate normally?	Yes	Go to step 6.
		No	Go to next step.
5	Disconnect purge solenoid valve (High) connector. Turn ignition switch to ON. Is there battery positive voltage at connector terminal A?	Yes	Go to next step.
		No	Check for open or short circuit in wiring harness. (Main relay terminal D — Purge solenoid valve terminal A), then go to step 9.
6	Is there continuity between connector terminal B and PCM terminal 3L?	Yes	Go to next step.
		No	Repair or replace wiring harness, then go to step 10.
7	Is there continuity between purge solenoid valve connector terminals A and B?	Yes	Go to next step.
		No	Replace purge solenoid valve, then go to step 10.
8	Clear diagnostic trouble code from memory. Is same code No. present after performing "After Repair Procedure"?	Yes	Get assistance from Technical Hotline/your distributor, then replace PCM if necessary.
		No	Intermittent poor connection in harness or connector. Repair connector and/or harness, then go to next step.
9	Clear diagnostic trouble code from memory. Is there any diagnostic trouble code present after performing "After Repair Procedure"?	Yes	Go to applicable DTC inspection.
		No	Troubleshooting completed.

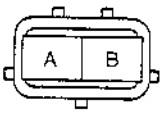

HARNESS SIDE CONNECTOR
(VIEW FROM TERMINAL CONNECTOR)

X5U101WDS

DTC P0446	Evaporative emission control system malfunction (Vent control malfunction)
DETECTION CONDITION	• Difference in fuel tank pressures measured when canister drain cut valve is released and several seconds after it is too small • Tank pressure control valve is opened while canister drain cut valve is opening
POSSIBLE CAUSE	• Canister drain cut valve malfunction • Tank pressure control valve malfunction • Charcoal canister malfunction • Air filter clogged • Check valve (two-way) clogging • Evaporative hose clogged • EGR boost sensor malfunction • Fuel tank level sensor malfunction • Fuel tank pressure sensor malfunction • Engine coolant temperature sensor malfunction • Intake air temperature sensor malfunction • Throttle position sensor malfunction • Mass air flow sensor malfunction • Vehicle speed sensor malfunction • Open or short circuit in wiring harness • Poor connection of connector

STEP	INSPECTION		ACTION
1	Has FREEZE FRAME PID DATA been recorded?	Yes	Go to next step.
		No	Record FREEZE FRAME PID DATA on repair order, then go to next step.

STEP	INSPECTION		ACTION
2	Verify stored DTC. Have DTCs P0102, P0103, P0111, P0112, P0123, P0117, P0118, P0122, P0123, P0335, P0443, P0500, P1102, P1103, P1122, P1123, and/or P1449 been stored?	Yes	Inspect and repair DTC P0102, P0103, P0111, P0112, P0123, P0117, P0118, P0122, P0123, P0335, P0443, P0500, P1102, P1103, P1122, P1123, P1449, then go to step 19.
		No	Go to next step.
3	Implement PID/DATA MONITOR AND RECORD (BARO V, ECT V, FTL V, FTP V, IAT V, MAF V, TP V, VS) from DIAGNOSTIC DATA LINK by using NGS tester. Is there any signal that is far out of specification when ignition switch is at ON and run engine at idle?	Yes	Implement "01–01A ENGINE DIAGNOSTIC INSPECTION, Input System Investigation Procedure" and repair or replace, then go to step 13.
		No	Go to next step.
4	Continue monitoring items on previous step. Is there any input signal which causes drastic changes when they are driven stable for approx. 1 minute under same trouble condition? **Note** • While EGR is diagnosing, it is normal that switches BAROV over from barometric pressure to intake manifold negative pressure, do not misdiagnose it.	Yes	Implement "01–01A ENGINE DIAGNOSTIC INSPECTION, Input System Investigation Procedure" and repair or replace, then go to step 13.
		No	Go to next step.
5	Carry out IGNITION ON TEST from SIMULATION TEST by using NGS tester. Is canister drain cut valve and tank pressure control valve operating sound heard when CDCV is turned from OFF to ON?	Yes	Go to step 8.
		No	Go to next step.
6	Inspect canister drain cut valve for air tightness and closed stuck. ☞ 01–16 CANISTER DRAIN CUT VALVE INSPECTION Is it okay?	Yes	Go to next step.
		No	Replace canister drain cut valve, then go to step 13.
7	Inspect tank pressure control valve for air tightness and closed stuck. ☞ 01–16 TANK PRESSURE CONTROL VALVE INSPECTION Is it okay?	Yes	Inspect and repair or replace on following harness, connector or terminal: • From main relay to canister drain cut valve • From main relay to tank pressure control valve • From canister drain cut valve to PCM • From tank pressure control valve to PCM Then go to step 13.
		No	Replace tank pressure control valve, then go to step 13.
8	Remove charcoal canister and inspect for clogging. ☞ 01–16 CHARCOAL CANISTER INSPECTION Is it okay?	Yes	Go to next step.
		No	Replace charcoal canister, then go to step 13.
9	Find hose, which is led from tank pressure control valve to charcoal canister. Clamp on this hose and remove filler cap. Implement PID/DATA MONITOR AND RECORD (FTP, FTP V) from DIAGNOSTIC DATA LINK by using NGS tester. Are FTP and FTPV values same as atmospheric pressure?	Yes	Install filler cap, then go to step 11.
		No	Go to next step.
10	Inspect fuel tank pressure sensor. ☞ 01–40 FUEL TANK PRESSURE SENSOR INSPECTION Is it okay?	Yes	Go to the next step.
		No	Replace fuel tank pressure sensor, then go to step 13.
11	Remove and inspect check valve (two-way) for clogging. ☞ 01–16 CHECK VALVE (TWO-WAY) INSPECTION Is it okay?	Yes	Go to next step.
		No	Replace check valve (two-way), then go to step 13.

STEP	INSPECTION		ACTION
12	Remove and inspect air filter for clogged. Is it okay?	Yes	Inspect and repair or replace for clogged on following hoses: • From charcoal canister to canister drain cut valve • From canister drain cut valve to air filter • From air filter to two-way check valve Then go to next step.
		No	Replace air filter, then go to next step.
13	Implement PID/DATA MONITOR AND RECORD from DIAGNOSTIC DATA LINK by using NGS tester. Verify that following PID's are within indicated ranges when ignition switch at ON. • BAROV 72.0 kPa {21.3 inHg} or higher • ECTV 0—35 °C {32—95 °F} • IAT 10—60 °C {50—140 °F} Verify that fuel gauge reads within 1/4—3/4 of tank. Were readings within indicated ranges?	Yes	Correct condition, then go to next step.
		No	Take corrective action, then go to next step. **Note** • Readings need to be in the indicated ranges to perform DRIVE MODE.
14	Clear DTC. Run DRIVE MODE. ☞ 01–01A ENGINE DIAGNOSTIC INSPECTION, Fuel Tank Pressure Graph Recording Procedure Verify that CDCV and FTP graphs. Is there any problem detected?	Yes	Go back to step 2. **Note** • If malfunction remains even though all inspections have been performed, get assistance from Technical Hotline/your distributor.
		No	Go to next step.
15	Verify stored PENDING TROUBLE CODE, DTC and DIAGNOSTIC MONITORING TEST RESULTS. Is there any code stored and/or out of specification?	Yes	Go to appropriate DTC inspection.
		No	Troubleshooting completed.

DTC P0452	Evaporative emission control system pressure sensor low input
DETECTION CONDITION	• While engine coolant temperature is below 80 °C {176 °F}, input voltage from fuel tank pressure sensor is below 0.2 V when while time from engine started is 1—3 seconds
POSSIBLE CAUSE	• Fuel tank pressure sensor malfunction • Open circuit in wiring from fuel tank pressure sensor terminal A to PCM terminal 2A • Open or short circuit in wiring from fuel tank pressure sensor terminal C to PCM terminal 2I

STEP	INSPECTION		ACTION
1	Has FREEZE FRAME PID DATA been recorded?	Yes	Go to next step.
		No	Record FREEZE FRAME PID DATA on repair order, then go to next step.
2	Does fuel tank pressure sensor connector and PCM connector have poor connection?	Yes	Repair or replace connector, then go to step 9.
		No	Go to next step.
3	Implement PID/DATA MONITOR AND RECORD (FTP V) of DIAGNOSTIC DATA LINK by using NGS tester. Is voltage as specified?	Yes	Go to step 9.
		No	Go to next step.
4	Are fuel tank pressure sensor and connecting hose free of freezing, breaking, and clogs?	Yes	Repair or replace, then go to step 9.
		No	Go to next step.
5	Disconnect fuel tank pressure sensor connector. Turn ignition switch to ON. Is there 5 V at harness connector terminal C?	Yes	Go to next step.
		No	Check for open or short circuit in wiring harness, then go to step 9. (PCM terminal 2I — Fuel tank pressure sensor terminal C)
6	Is there continuity between connector terminal A and PCM terminal 2A?	Yes	Go to next step.
		No	Repair or replace wiring harness, then go to step 9.
7	Is fuel tank pressure sensor okay? ☞ 01–40 FUEL TANK PRESSURE SENSOR INSPECTION	Yes	Go to next step.
		No	Replace fuel tank pressure sensor, then go to step 9.

STEP	INSPECTION		ACTION
8	Clear diagnostic trouble code from memory. Is same code No. present after performing "After Repair Procedure"?	Yes	Get assistance from Technical Hotline/your distributor, then replace PCM if necessary.
		No	Intermittent poor connection in harness or connector. Repair connector and/or harness, then go to next step.
9	Clear diagnostic trouble code from memory. Is there any diagnostic trouble code present after performing "After Repair Procedure"?	Yes	Go to applicable DTC inspection.
		No	Troubleshooting completed.

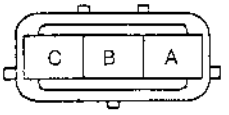

HARNESS SIDE CONNECTOR
(VIEW FROM TERMINAL CONNECTOR)

X5U101WDT

DTC P0453	Evaporative emission control system pressure sensor high input
DETECTION CONDITION	• While engine coolant temperature is below 80 °C {176 °F}, input voltage from fuel tank pressure sensor is above 4.8 V when while time from engine started is 1—3 seconds
POSSIBLE CAUSE	• Fuel tank pressure sensor malfunction • Short circuit in wiring from fuel tank pressure sensor terminal A to PCM terminal 2A • Open circuit in wiring from fuel tank pressure sensor terminal B to PCM terminal 3F • Short circuit in wiring from fuel tank pressure sensor terminal C to PCM terminal 2I

STEP	INSPECTION		ACTION
1	Has FREEZE FRAME PID DATA been recorded?	Yes	Go to next step.
		No	Record FREEZE FRAME PID DATA on repair order, then go to next step.
2	Does fuel tank pressure sensor connector and PCM connector have poor connection?	Yes	Repair or replace connector, then go to step 9.
		No	Go to next step.
3	Implement PID/DATA MONITOR AND RECORD (FTP V) of DIAGNOSTIC DATA LINK by using NGS tester. Is voltage as specified?	Yes	Go to step 9.
		No	Go to next step.
4	Are fuel tank pressure sensor and connecting hose free of freezing, breaking, and clogs?	Yes	Repair or replace, then go to step 9.
		No	Go to next step.
5	Disconnect fuel tank pressure sensor connector. Turn ignition switch to ON. Is there 5 V at harness connector terminal C?	Yes	Go to next step.
		No	Check for open or short circuit in wiring harness, then go to step 10. (PCM terminal 2I — Fuel tank pressure sensor terminal C)
6	Is there continuity between connector terminal A and PCM terminal 2A?	Yes	Go to next step.
		No	Repair or replace wiring harness, then go to step 10.
7	Is there continuity between connector terminal B and PCM terminal 3F?	Yes	Go to next step.
		No	Repair or replace wiring harness, then go to step 10.
8	Is fuel tank pressure sensor okay? ☞ 01–40 FUEL TANK PRESSURE SENSOR INSPECTION	Yes	Go to next step.
		No	Replace fuel tank pressure sensor, then go to step 10.
9	Clear diagnostic trouble code from memory. Is same code No. present after performing "After Repair Procedure"?	Yes	Get assistance from Technical Hotline/your distributor, then replace PCM if necessary.
		No	Intermittent poor connection in harness or connector. Repair connector and/or harness, then go to next step.

STEP	INSPECTION		ACTION
10	Clear diagnostic trouble code from memory. Is there any diagnostic trouble code present after performing "After Repair Procedure"?	Yes	Go to applicable DTC inspection.
		No	Troubleshooting completed.

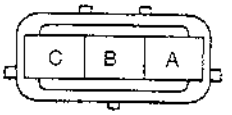

HARNESS SIDE CONNECTOR
(VIEW FROM TERMINAL CONNECTOR)

X5U101WDU

DTC P0455	Evaporative emission control system malfunction (Con. leak detected)
DETECTION CONDITION	Fuel tank pressure measured immediately after purge control is stopped with canister drain cut valve closed is too high
POSSIBLE CAUSE	• Purge solenoid valve malfunction • Canister drain cut valve malfunction • Tank pressure control valve malfunction • Vent cut valve malfunction • Loose fuel filler cup • Charcoal canister malfunction • Catch tank malfunction • Rollover valve malfunction • Cracked Fuel tank • Fuel tank component parts poorly installed • Evaporative hose damaged or loose • Insufficient manifold absolute pressure • EGR boost sensor malfunction • Fuel tank level sensor malfunction • Fuel tank pressure sensor malfunction • Engine coolant temperature sensor malfunction • Intake air temperature sensor malfunction • Throttle position sensor malfunction • Mass air flow sensor malfunction • Vehicle speed sensor malfunction • Open or short circuit in wiring harness • Poor connection of connector

STEP	INSPECTION		ACTION
1	Has FREEZE FRAME PID DATA been recorded?	Yes	Go to next step.
		No	Record FREEZE FRAME PID DATA on repair order, then go to next step.
2	Verify stored DTC. Have DTCs P0102, P0103, P0111, P0112, P0123, P0117, P0118, P0122, P0123, P0335, P0443, P0500, P1102, P1103, P1122, P1123, and/or P1449 been stored?	Yes	Inspect and repair DTC P0102, P0103, P0111, P0112, P0123, P0117, P0118, P0122, P0123, P0335, P0443, P0500, P1102, P1103, P1122, P1123, P1449, then go to step 19.
		No	Go to next step.
3	Connect vacuum gauge on negative pressure port beside purge control system to measure intake manifold negative pressure at idle. ☞ 01–01A ENGINE SYSYEM INSPECTION, Intake Manifold Vacuum Inspection Is intake manifold negative pressure okay?	Yes	Go to next step.
		No	Inspect and repair troubles on intake-air system and engine, then go to step 26.
4	Implement PID/DATA MONITOR AND RECORD (BARO V, ECT V, FTL V, FTP V, IAT V, MAF V, TP V, VS) from DIAGNOSTIC DATA LINK by using NGS tester. Is there any signal that is far out of specification when ignition switch is at ON and run engine at idle?	Yes	Implement "01–01A ENGINE DIAGNOSTIC INSPECTION, Input System Investigation Procedure" and repair or replace, then go to step 26.
		No	Go to next step.

STEP	INSPECTION		ACTION
5	Continue monitoring items on previous step. Is there any input signal which causes drastic changes when they are driven stable for approx. 1 minute under same trouble condition? **Note** • While EGR is diagnosing, it is normal that switches BAROV over from barometric pressure to intake manifold negative pressure, do not misdiagnose it.	Yes	Implement "01-01A ENGINE DIAGNOSTIC INSPECTION, Input System Investigation Procedure" and repair or replace, then go to step 26.
		No	Go to next step.
6	Confirm filler cap is not either disconnected, loose or damaged. Is it okay? **Note** • When filler caps other than OEM caps are attached, it is considered malfunction.	Yes	Go to next step.
		No	Replace or properly attach filler cap, then go to step 26.
7	Carry out IGNITION ON TEST from SIMULATION TEST by using NGS tester. Is canister drain cut valve and tank pressure control valve operating sound heard when CDCV is turned from OFF to ON?	Yes	Go to step 10.
		No	Go to next step.
8	Inspect canister drain cut valve for damage, air leak and air tightness. ☞ 01-16 CANISTER DRAIN CUT VALVE INSPECTION Is it okay?	Yes	Go to next step.
		No	Replace canister drain cut valve, then go to step 26.
9	Inspect tank pressure control valve for damage, air leak and air tightness. ☞ 01-16 TANK PRESSURE CONTROL VALVE INSPECTION Is it okay?	Yes	Inspect and repair or replace on following harness, connector or terminal: • From main relay to canister drain cut valve • From main relay to tank pressure control valve • From canister drain cut valve to PCM • From tank pressure control valve to PCM Then go to step 26.
		No	Replace tank pressure control valve, then go to step 26.
10	Inspect purge control system. ☞ 01-01A ENGINE SYSTEM INSPECTION, Purge Control Inspection Is it okay?	Yes	Go to next step.
		No	Repair or replace the faulty parts, then go to step 26.
11	Implement "01-01A ENGINE SYSTEM INSPECTION, Evaporative Emission Control System Inspection, Whole system check". Does NGS tester value change under to specified readings and hold for minimum of 2 minutes?	Yes	No leaks were detected in evaporative emission control system at this time, go to step 26.
		No	Go to next step.
12	Find hose, which is led from tank pressure control valve to charcoal canister. Clamp on this hose and remove filler cap. Implement PID/DATA MONITOR AND RECORD (FTP, FTP V) from DIAGNOSTIC DATA LINK by using NGS tester. Are FTP and FTPV values same as atmospheric pressure?	Yes	Install filler cap, then go to step 15.
		No	Go to next step.
13	Inspect fuel tank pressure sensor. ☞ 01-40 FUEL TANK PRESSURE SENSOR INSPECTION Is it okay?	Yes	Go to the next step.
		No	Replace fuel tank pressure sensor, then go to step 26.
14	Inspect rollover valve for air flow operation. ☞ 01-16 ROLLOVER VALVE INSPECTION Is it okay?	Yes	Inspect and repair or replace plugging of the hose between fuel tank pressure sensor and fuel tank, then go to step 26.
		No	Replace rollover valve, then go to step 26.

STEP	INSPECTION		ACTION
15	Implement "01–01A ENGINE SYSTEM INSPECTION, Evaporative Emission Control System Inspection, Check from charcoal canister to fuel tank". Does NGS tester value change under to the specified readings?	Yes	Go to step 17.
		No	Go to next step.
16	Inspect that there is no plugging on vent cut valve. ☞ 01–14 VENT CUT VALVE INSPECTION Is it okay?	Yes	Inspect and repair or replace for detached or plugged on following hoses: • From charcoal canister to vent cut valve • From vent cut valve to fuel tank pressure sensor Then go to step 26.
		No	Replace filler pipe assembly, then go to step 26.
17	At step 15, does NGS tester value hold for a minimum of 2 minutes?	Yes	Go to step 21.
		No	Go to next step.
18	Remove fuel tank and visually inspect for damage, insufficient sealing or poorly attached accessories on the fuel tank, such as fuel gauge. Is it okay?	Yes	Go to next step.
		No	Repair or replace fuel tank or sealing, then go to step 26.
19	Inspect rollover valve for damage. ☞ 01–16 ROLLOVER VALVE INSPECTION Is it okay?	Yes	Go to next step.
		No	Replace rollover valve, then go to step 26.
20	Inspect vent cut valve for leakage. ☞ 01–14 VENT CUT VALVE INSPECTION Is it okay?	Yes	Inspect and repair or replace for detached or plugged on following hoses: • From charcoal canister to vent cut valve • From vent cut valve to fuel tank pressure sensor Then go to step 26.
		No	Replace filler pipe assembly, then go to step 26.
21	Remove charcoal canister and inspect for plugging, damage and pinhole. ☞ 01–16 CHARCOAL CANISTER INSPECTION Is it okay?	Yes	Go to next step.
		No	Replace charcoal canister, then go to step 26.
22	Implement "01–01A ENGINE SYSTEM INSPECTION, Evaporative Emission Control System Inspection, Check from charcoal canister to purge solenoid valve". Does vacuum change under to the specified readings and hold for a minimum of 2 minutes?	Yes	Go to step 26.
		No	Go to next step.
23	Inspect for detached, incorrectly installed or cracked on following hoses: • From charcoal canister to catch tank • From catch tank to purge solenoid valve Is there any trouble?	Yes	Repair or replace faulty hose, then go to step 26.
		No	Go to next step.
24	Remove catch tank and inspect for plugging, damages and pinhole using vacuum pump. Is it okay?	Yes	Go to next step.
		No	Replace catch tank, then go to step 26.
25	Inspect purge solenoid valve for damage, air leak and open stuck. ☞ 01–16 PURGE SOLENOID VALVE INSPECTION Is it okay?	Yes	Inspect and repair or replace on following harness, connector or terminal: • From main relay to purge solenoid valve • From purge solenoid valve to PCM Then go to next step.
		No	Replace purge solenoid valve, then go to next step.
26	Implement PID/DATA MONITOR AND RECORD from DIAGNOSTIC DATA LINK by using NGS tester. Verify that following PID's are within indicated ranges when ignition switch is at ON. • BAROV 72.0 kPa {21.3 inHg} or higher • ECT V 0—35 °C {32—95 °F} • IAT 10—60 °C {50—140 °F} Verify that fuel gauge reads within 1/4—3/4 of tank. Were readings within indicated ranges?	Yes	Correct condition, then go to next step.
		No	Take corrective action, then go to next step. **Note** • Readings need to be in the indicated ranges to perform DRIVE MODE.

STEP	INSPECTION		ACTION
27	Clear DTC. Run DRIVE MODE. ☞ 01–01A ENGINE DIAGNOSTIC INSPECTION, Fuel Tank Pressure Graph Recording Procedure Verify that CDCV and FTP graphs. Is there any problem detected?	Yes	Go back to step 2. **Note** • If malfunction remains even though all inspections have been performed, get assistance from Technical Hotline/your distributor.
		No	Go to next step.
28	Verify TEST # 10:22:00 on DIAGNOSTIC MONITORING TEST RESULTS. Is it below MAX value?	Yes	Go to next step.
		No	Go back to step 2. **Note** • If malfunction remains even though all inspections have been performed, get assistance from Technical Hotline/your distributor.
29	Verify stored PENDING TROUBLE CODE, DTC and DIAGNOSTIC MONITORING TEST RESULTS. Is there any code stored and/or out of specification?	Yes	Go to appropriate DTC inspection.
		No	Troubleshooting completed.

DTC P0461	Fuel level sensor circuit range/performance
DETECTION CONDITION	• Fuel gauge sender unit operation range is narrow when fuel consumption volume is over 16 litres
POSSIBLE CAUSE	• Fuel gauge sender unit malfunction or substandard performance • Open or short circuit in wiring from fuel pump terminal C to PCM terminal 3K • Open or short circuit in wiring from main relay terminal A to fuel pump terminal C • Open circuit in wiring from fuel pump terminal A to ground • Instrument cluster malfunction

STEP	INSPECTION		ACTION
1	Have FREEZE FRAME PID DATA been recorded?	Yes	Go to next step.
		No	Record FREEZE FRAME PID DATA on repair order, then go to next step.
2	Do fuel pump connector and PCM connector have poor connection?	Yes	Repair or replace connector, then go to step 7.
		No	Go to next step.
3	Verify stored DTC. Have DTCs P0462 and/or P0463 been stored?	Yes	Inspect and repair DTC P0462 or P0463, then go to step 7.
		No	Go to next step.
4	Implement PID/DATA MONITOR AND RECORD (FLT V) of DIAGNOSTIC DATA LINK by using NGS. Is voltage as specified?	Yes	Go to next step.
		No	Inspect fuel gauge sender unit continuity and bend in the float rod, then go to step 7.
5	Is fuel gauge sender unit continuity. ☞ 09–22 FUEL GAUGE SENDER UNIT INSPECTION Is circuit okay?	Yes	Go to next step.
		No	Repair or replace instrument cluster.
6	Clear diagnostic trouble code from memory. Is same code No. present after performing "After Repair Procedure"?	Yes	Get assistance from Technical Hotline, then replace PCM if necessary.
		No	Intermittent poor connection in harness or connector. Repair connector and/or harness, then go to next step.

STEP	INSPECTION		ACTION
7	Clear diagnostic trouble code from memory. Is there any diagnostic trouble code present after performing "After Repair Procedure"?	Yes	Go to applicable DTC inspection.
		No	Troubleshooting completed.

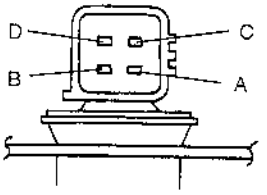

HARNESS SIDE CONNECTOR
(VIEW FROM TERMINAL CONNECTOR)

X5U10*WEB

DTC P0462	Fuel level sensor circuit high input
DETECTION CONDITION	• Input voltage from fuel gauge sender unit is above 5.4 V when battery positive voltage is 11—16 V
POSSIBLE CAUSE	• Fuel gauge sender unit malfunction • Open or short circuit in wiring from fuel pump terminal C to PCM terminal 3K • Short circuit in wiring from main relay terminal A to fuel pump terminal C • Open circuit in wiring from fuel pump terminal A to ground • Instrument cluster malfunction

STEP	INSPECTION		ACTION
1	Have FREEZE FRAME PID DATA been recorded?	Yes	Go to next step.
		No	Record FREEZE FRAME PID DATA on repair order, then go to next step.
2	Do fuel pump connector and PCM connector have poor connection?	Yes	Repair or replace connector, then go to step 8.
		No	Go to next step.
3	Implement PID/DATA MONITOR AND RECORD (FLT V) of DIAGNOSTIC DATA LINK by using NGS. Is voltage as specified?	Yes	Go to step 8.
		No	Go to next step.
4	Is there continuity between fuel pump side connector terminal C and PCM terminal 3K?	Yes	Go to next step.
		No	Repair or replace wiring harness, then go to step 8.
5	Is there continuity between fuel pump side connector terminal A and ground?	Yes	Go to next step.
		No	Repair or replace wiring harness, then go to step 8.
6	Is fuel gauge sender unit continuity and bend in the float rod okay? ☞ 09–22 FUEL GAUGE SENDER UNIT INSPECTION	Yes	Go to next step.
		No	Replace fuel gauge sender unit, then go to step 8.
7	Clear diagnostic trouble code from memory. Is same code No. present after performing "After Repair Procedure"?	Yes	Get assistance from Technical Hotline, then replace PCM if necessary.
		No	Intermittent poor connection in harness or connector. Repair connector and/or harness, then go to next step.
8	Clear diagnostic trouble code from memory. Is there a diagnostic trouble code present after performing "After Repair Procedure"?	Yes	Go to applicable DTC inspection.
		No	Troubleshooting completed.

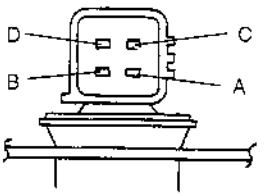

HARNESS SIDE CONNECTOR
(VIEW FROM TERMINAL CONNECTOR)

X5U10*WEA

DTC P0463	Fuel level sensor circuit low input
DETECTION CONDITION	• Input voltage from fuel gauge sender unit is below 0.07 V when battery positive voltage is 11—16 V
POSSIBLE CAUSE	• Fuel gauge sender unit malfunction • Open or short circuit in wiring from fuel pump terminal C to PCM terminal 3K • Open circuit in wiring from main relay terminal A to fuel pump terminal C • Instrument cluster malfunction

STEP	INSPECTION		ACTION
1	Have FREEZE FRAME PID DATA been recorded?	Yes	Go to next step.
		No	Record FREEZE FRAME PID DATA on repair order, then go to next step.
2	Do fuel pump connector and PCM connector have poor connection?	Yes	Repair or replace connector, then go to step 8.
		No	Go to next step.
3	Implement PID/DATA MONITOR AND RECORD (FLT V) of DIAGNOSTIC DATA LINK by using NGS. Is voltage as specified?	Yes	Go to step 8.
		No	Go to next step.
4	Is there continuity between fuel pump side connector terminal C and PCM terminal 3K?	Yes	Go to next step.
		No	Repair or replace wiring harness, then go to step 8.
5	Is there continuity between main relay side connector terminal A and fuel gauge sender unit side connector terminal C?	Yes	Go to next step.
		No	Repair or replace wiring harness, then go to step 8.
6	Is fuel gauge sender unit continuity and bend in the float rod okay? ☞ 09–22 FUEL GAUGE SENDER UNIT INSPECTION	Yes	Go to next step.
		No	Replace fuel gauge sender unit, then go to step 8.
7	Clear diagnostic trouble code from memory. Is same code No. present after performing "After Repair Procedure"?	Yes	Get assistance from Technical Hotline, then replace PCM if necessary.
		No	Intermittent poor connection in harness or connector. Repair connector and/or harness, then go to next step.
8	Clear diagnostic trouble code from memory. Is there a diagnostic trouble code present after performing "After Repair Procedure"?	Yes	Go to applicable DTC inspection.
		No	Troubleshooting completed.

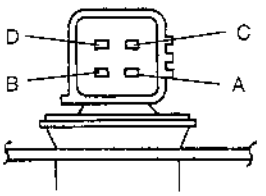

HARNESS SIDE CONNECTOR
(VIEW FROM TERMINAL CONNECTOR)

X5U101WE9

DTC P0500	Vehicle speed sensor malfunction
DETECTION CONDITION	• Vehicle speed signal is less than 3.77 km/h {2.34 mph} for more than 25.5 sec. while driving in following condition: • Engine speed is over 2,000 rpm • Charging efficiency is over 40%
POSSIBLE CAUSE	• Speedometer sensor malfunction • Open or short circuit in wiring from ignition switch to speedometer sensor • Open or short circuit in wiring from speedometer sensor to GND • Open or short circuit in wiring from speedometer sensor to vehicle speed sensor • Open or short circuit in wiring from vehicle speed sensor to PCM terminal 2D

STEP	INSPECTION		ACTION
1	Have FREEZE FRAME PID DATA been recorded?	Yes	Go to next step.
		No	Record FREEZE FRAME PID DATA on repair order, then go to next step.
2	Does vehicle speed sensor connector or PCM connector have poor connection?	Yes	Repair or replace connector, then go to step 8.
		No	Go to next step.

STEP	INSPECTION		ACTION
3	Implement PID/DATA MONITOR AND RECORD (VS) of DIAGNOSTIC DATA LINK by using NGS tester. Does it operate normally?	Yes	Go to step 6.
		No	Go to next step.
4	Is there continuity between vehicle speed sensor terminal and PCM terminal 2D?	Yes	Go to next step.
		No	Repair or replace wiring harness, then go to step 8.
5	Is there continuity between vehicle speed sensor and speedometer sensor terminals?	Yes	Go to next step.
		No	Repair or replace speedometer sensor and wiring harness, then go to step 8.
6	Is vehicle speed sensor okay?	Yes	Go to next step.
		No	Repair or replace as necessary, then go to step 8.
7	Clear diagnostic trouble code from memory. Is same code No. present after performing "After Repair Procedure"?	Yes	Get assistance from Technical Hotline/your distributor, then replace PCM if necessary.
		No	Intermittent poor connection in harness or connector. Repair connector and/or harness, then go to next step.
8	Clear diagnostic trouble code from memory. Is there any diagnostic trouble code present after performing "After Repair Procedure"?	Yes	Go to applicable DTC inspection.
		No	Troubleshooting completed.

DTC P0506	Idle control system RPM is lower than expected
DETECTION CONDITION	If the actual idle speed is lower (by approximately 100 rpms or more) than expected for 14 seconds while the brake pedal is depressed (brake switch is on) and the steering wheel is straight ahead (power steering switch is off).
POSSIBLE CAUSE	• Open circuit in wiring diagram • Damaged or clogged IAC valve • Damaged throttle body • Air leaks • PCV valve malfunction • Engine coolant temperature sensor malfunction • Purge control solenoid valve malfunction • Fuel system malfunction • A/C compressor stays on • Low engine compression • EGR valve malfunction

STEP	INSPECTION		ACTION
1	Has FREEZE FRAME DATA been recorded?	Yes	Go to next step.
		No	Record the FREEZE FRAME DATA on the repair order, then go to next step.
2	Confirm the pending and stored DTC. Have DTC P0171, P0172, P0443, P1496, P1497, P1498, P1499, P0507, and P1504 for the fuel system, purge solenoid valve, EGR valve or IAC valve been set beside P0506?	Yes	Inspect and repair the DTC except the system related areas, then go to step 13.
		No	Go to next step.
3	Inspect the ignition timing or engine speed. ☞ 01–10 ENGINE TUNE-UP Is ignition timing or engine speed okay?	Yes	Go to next step.
		No	Adjust the ignition timing or engine speed.
4	Inspect for air leaks in the intake air system. Is there an air leak finding in the intake air system?	Yes	Repair or replace if necessary, then go to step 13.
		No	Go to next step.
5	Perform the IAC operation inspection. ☞ 01–01A ENGINE SYSTEM INSPECTION, Idle Air control inspection Is IAC system operation okay?	Yes	Go to step 7.
		No	Go to next step.
6	Perform the IAC valve inspection. ☞ 01–13 IDLE AIR CONTROL VALVE INSPECTION Is IAC valve okay?	Yes	Go to next step.
		No	Check if IAC valve is clogged or stuck. Repair or replace if necessary. Go to step 13.

STEP	INSPECTION		ACTION
7	Remove the throttle body. Inspect for bends or damage on the throttle valve or throttle body. Are there any bends or damage?	Yes	Replace the throttle body, then go to step 13.
		No	Go to next step.
8	Start the engine. Make sure that the A/C switch is turned off. Does the A/C compressor operate?	Yes	Check the root cause in the A/C system. Go to step 13 after repair is completed.
		No	Go to next step.
9	Pinch the vacuum hose between intake manifold and purge solenoid valve. Does engine condition improve?	Yes	Inspect purge solenoid valve. ☞ 01–16 PURGE SOLENOID VALE INSPECTION Go to step 13 after repair is completed.
		No	Go to next step.
10	Inspect PCV valve and hose. ☞ 01–16 PCV VALVE INSPECTION Are PCV valve and hose okay?	Yes	Go to next step.
		No	Replace defective part if necessary, then go to step 13.
11	Check if the EGR valve is stuck open. ☞ 01–16 EGR VALVE INSPECTION Is EGR valve okay?	Yes	Go to next step.
		No	Repair or replace the EGR valve, then go to step 13.
12	Inspect engine compression. ☞ 01–10 COMPRESSION INSPECTION Is engine compression okay?	Yes	Inspect for fuel injector. ☞ 01–14 FUEL INJECTOR INSPECTION Repair or replace if necessary. Go to next step.
		No	Repair or replace any defective part, then go to next step.
13	Clear diagnostic trouble code from memory. Is same code No. present after performing "After Repair Procedure"?	Yes	Get assistance from Technical Hotline, then replace PCM if necessary.
		No	Troubleshooting completed.

DTC P0507	Idle control system RPM is higher than expected
DETECTION CONDITION	If the actual idle speed is higher (by approximately 200 rpms or more) than expected for 14 seconds while the brake pedal is depressed (brake switch is on) and the steering wheel is straight ahead (power steering switch is off).
POSSIBLE CAUSE	• Short circuit in wiring diagram • IAC solenoid valve malfunction • Damaged IAC solenoid valve • IAC solenoid valve malfunction • Vacuum leaks • Damaged throttle body • Engine coolant temperature sensor malfunction • Accelerator cable not adjusted correctly

STEP	INSPECTION		ACTION
1	Has FREEZE FRAME DATA been recorded?	Yes	Go to next step.
		No	Record the FREEZE FRAME DATA on the repair order, then go to next step.
2	Confirm the pending and stored DTC. Have the DTC P0117, P0118, P0506, and P1504, for engine coolant temperature sensor and IAC valve been set beside P0507?	Yes	Inspect and repair the DTC and repair or replace as necessary. Go to step 9.
		No	Go to next step.
3	Inspect the ignition timing or engine speed. ☞ 01–10 ENGINE TUNE-UP Is ignition timing or engine speed okay?	Yes	Go to next step.
		No	Adjust the ignition timing or engine speed.
4	Inspect for accelerator free play. ☞ 01–13 ACCELERATOR CABLE INSPECTION/ADJUSTMENT Is free play okay?	Yes	Go to next step.
		No	Adjust the accelerator cable free play, then go to step 9.
5	Inspect for vacuum leaks in the intake air system. Is any vacuum leak found?	Yes	Repair or replace if necessary, then go to step 8.
		No	Go to next step.
6	Perform the IAC operation inspection. ☞ 01–01A ENGINE SYSTEM INSPECTION, Idle Air Control Inspection Is IAC system operation okay?	Yes	Go to step 8.
		No	Go to next step.

STEP	INSPECTION		ACTION
7	Perform the IAC valve inspection. ☞ 01–13 IDLE AIR CONTROL VALVE INSPECTION Is IAC valve okay?	Yes	Go to next step.
		No	Check if IAC valve is stuck open. Repair or replace if necessary. Go to step 9.
8	Remove the throttle body. Inspect for bends or damage on the throttle valve or throttle body. Are there any bends or damage?	Yes	Replace the throttle body, then go to next step.
		No	Go to next step.
9	Clear diagnostic trouble code from memory. Is same code No. present after performing "After Repair Procedure"?	Yes	Get assistance from Technical Hotline, then replace PCM if necessary.
		No	Troubleshooting completed.

DTC P0550	P/S SW malfunction
DETECTION CONDITION	• The vehicle is running faster than 60 km/h {37.4 mph}, engine coolant temperature is above 60 °C {140 °F} and the power steering pressure switch is, continuously, at ON for more than 60 seconds
POSSIBLE CAUSE	• Power steering pressure switch malfunction • Short circuit in wiring from PCM terminal IG to power steering pressure switch • Power steering system malfunction

STEP	INSPECTION		ACTION
1	Has FREEZE FRAME PID DATA on repair order sheet?	Yes	Go to next step.
		No	Record FREEZE FRAME PID DATA on repair order, then go to next step.
2	Implement PID/DATA MONITOR AND RECORD (PSP SW) of DIAGNOSTIC DATA LINK by using NGS tester. Does it operate normally?	Yes	Go to step 6.
		No	Go to next step.
3	Is there continuity between power steering pressure switch connector terminal A and PCM terminal 1G?	Yes	Go to next step.
		No	Repair or replace wiring harness.
4	Is power steering fluid pressure okay? ☞ 06–12 POWER STEERING FLUID INSPECTION	Yes	Replace power steering pressure switch.
		No	Check for power steering system.
5	Clear diagnostic trouble code from memory. Is same code No. present after performing "After Repair Procedure"?	Yes	Get assistance from technical Hotline/your distributor, then replace PCM if necessary.
		No	Intermittent poor connection of harness or connector (Repair connector and/or harness), then go to next step.
6	Clear diagnostic trouble code from memory. Is there any diagnostic trouble code present after performing "After Repair Procedure"?	Yes	Go to applicable DTC inspection.
		No	Troubleshooting completed.

DTC P0703	Brake switch input malfunction
DETECTION CONDITION	• Accelerated/decelerated 0—30 km/h {0—19 mph} repeatedly for more than 10 times
POSSIBLE CAUSE	• Brake switch malfunction • Open or short circuit in wiring from PCM terminal 1F to brake switch terminal • Open or short circuit in wiring from brake switch terminal to battery terminal

STEP	INSPECTION		ACTION
1	Have FREEZE FRAME PID DATA been recorded?	Yes	Go to next step.
		No	Record FREEZE FRAME PID DATA on repair order, then go to next step.
2	Does brake switch connector or PCM connector have poor connection?	Yes	Repair or replace connector, then go to step 6.
		No	Go to next step.
3	Implement PID/DATA MONITOR AND RECORD (BRK SW) of DIAGNOSTIC DATA LINK by using NGS tester. Does it operate normally?	Yes	Go to step 5.
		No	Go to next step.

STEP	INSPECTION		ACTION
4	Is there continuity between brake switch terminal and PCM terminal 1F?	Yes	Check for open or short circuit in wiring harness. (Battery — Brake switch) Check brake switch, then go to step 6.
		No	Repair or replace wiring harness, then go to step 6.
5	Clear diagnostic trouble code from memory. Is same code No. present after performing "After Repair Procedure"?	Yes	Get assistance from Technical Hotline/your distributor, then replace PCM if necessary.
		No	Intermittent poor connection in harness or connector. Repair connector and/or harness, then go to next step.
6	Clear diagnostic trouble code from memory. Is there any diagnostic trouble code present after performing "After Repair Procedure"?	Yes	Go to applicable DTC inspection.
		No	Troubleshooting completed.

DTC P0704	Clutch switch input circuit malfunction
DETECTION CONDITION	• Clutch switch never turns on/off after engine is started and accelerated/decelerated to 0—30 km/h {0—19 mph} repeatedly for more than 10 times • Clutch switch never turns off when engine speed below 400 rpm
POSSIBLE CAUSE	• Clutch switch malfunction • PCM malfunction • Open or short circuit in wiring from clutch switch to PCM terminal 3I

STEP	INSPECTION		ACTION
1	Has FREEZE FRAME PID DATA been recorded?	Yes	Go to next step.
		No	Record FREEZE FRAME PID DATA on repair order, then go to next step.
2	Does PCM connector have poor connection?	Yes	Repair or replace connector, then go to step.
		No	Go to next step.
3	Implement PID/DATA MONITOR AND RECORD (CLT SW) of DIAGNOSTIC DATA LINK by using NGS. Does it operate normally?	Yes	Go to step 7.
		No	Go to next step.
4	Is there continuity between clutch switch terminal and PCM terminal 3I?	Yes	Go to next step.
		No	Repair or replace wiring harness, then go to step 7.
5	Is clutch switch okay? ☞ 01–40 CLUTCH SWITCH INSPECTION	Yes	Go to next step.
		No	Repair or replace clutch switch, then go to step 7.
6	Clear diagnostic trouble code from memory. Is same code No. present after performing "After Repair Procedure"?	Yes	Get assistance from technical Hotline/your distributor, then replace PCM if necessary.
		No	Intermittent poor connection of harness or connector (Repair connector and/or harness), then go to step 7.
7	Clear diagnostic trouble code from memory. Is there any diagnostic trouble code present after performing "After Repair Procedure"?	Yes	Go to applicable DTC inspection.
		No	Troubleshooting completed.

DTC P0705	Neutral switch circuit malfunction (MT)
DETECTION CONDITION	• Neutral switch never turns on/off after engine is started and accelerated/decelerated to 0—30 km/h {0—19 mph} repeatedly for more than 10 times • Neutral switch never turns off when engine speed below 400 rpm
POSSIBLE CAUSE	• Neutral switch malfunction • PCM malfunction • Open or short circuit in wiring from neutral switch to PCM terminal

STEP	INSPECTION		ACTION
1	Has FREEZE FRAME PID DATA been recorded?	Yes	Go to next step.
		No	Record FREEZE FRAME PID DATA on repair order, then go to next step.
2	Does PCM connector have poor connection?	Yes	Repair or replace connector, then go to step 7.
		No	Go to next step.

STEP	INSPECTION		ACTION
3	Implement PID/DATA MONITOR AND RECORD (NL SW) of DIAGNOSTIC DATA LINK by using NGS. Does it operate normally?	Yes	Go to step 7.
		No	Go to next step.
4	Is there continuity between neutral switch terminal and PCM terminal 1V?	Yes	Go to next step.
		No	Repair or replace wiring harness, then go to step 7.
5	Is neutral switch okay? ☞ NEUTRAL SWITCH INSPECTION	Yes	Go to next step.
		No	Repair or replace neutral switch, then go to step 7.
6	Clear diagnostic trouble code from memory. Is same code No. present after performing "After Repair Procedure"?	Yes	Get assistance from technical Hotline/your distributor, then replace PCM if necessary.
		No	Intermittent poor connection of harness or connector. (Repair connector and/or harness), then go to step 7.
7	Clear diagnostic trouble code from memory. Is there any diagnostic trouble code present after performing "After Repair Procedure"?	Yes	Go to applicable DTC inspection.
		No	Troubleshooting completed.

DTC P1102	Mass air flow inconsistent with throttle position sensor (Lower than expected)
DETECTION CONDITION	Mass air flow volume is less than expected for 5 seconds or more when engine speed is more than 500 rpm and throttle valve is opened 50% or more
POSSIBLE CAUSE	• Open or short circuit in wiring diagram • Damaged mass airflow sensor • Blockage on mass airflow sensor screen • Throttle position sensor malfunction or incorrect installation position

STEP	INSPECTION		ACTION
1	Has FREEZE FRAME DATA been recorded?	Yes	Go to next step.
		No	Record the FREEZE FRAME DATA on the repair order, then go to next step.
2	Confirm the pending and stored DTC. Have the DTC P0102, P0103, P0122, P0123, P0506, P0507, and P1103, for throttle position sensor, mass airflow sensor or IAC valve been set beside P1102?	Yes	Go to applicable DTC and repair or replace as necessary. Go to step 7.
		No	Go to next step.
3	Start the engine. Access MAF V PID. Check MAF V PID. Is MAF V PID okay?	Yes	Go to step 6.
		No	Go to next step.
4	Remove the mass airflow sensor. Check if there is any blockage on the screen or any damages. Is mass airflow sensor okay?	Yes	Go to next step.
		No	Remove any blockage on the screen or if any blockage is found. Replace the mass airflow sensor as necessary. Go to step 7.
5	Inspect the throttle position sensor. ☞ 01–40 THROTTLE POSITION SENSOR INSPECTION Is throttle position sensor okay?	Yes	Go to next step.
		No	Repair or replace throttle position sensor.
6	Turn the ignition switch on. Access TP V PID. Inspect TP V PID. Is TP V PID okay?	Yes	Go to next step.
		No	Inspect for throttle position sensor. Repair or replace if necessary. Go to next step.
7	Clear diagnostic trouble code from memory. Is same code No. present after performing "After Repair Procedure"?	Yes	Get assistance from Technical Hotline, then replace PCM if necessary.
		No	Troubleshooting completed.

DTC P1103	Mass air flow inconsistent with RPM (Grater than expected)
DETECTION CONDITION	Mass airflow volume is higher than expected for 5 seconds or more when the engine speed is less than 2000 rpm and engine coolant temperature is above 80 °C {176 °F}
POSSIBLE CAUSE	• Open or short circuit in wiring diagram • Mass airflow sensor malfunction • Low battery • Damaged mass airflow sensor • Intake air leaks around mass airflow sensor

STEP	INSPECTION		ACTION
1	Has FREEZE FRAME DATA been recorded?	Yes	Go to next step.
		No	Record the FREEZE FRAME DATA on the repair order, then go to next step.
2	Confirm the pending and stored DTC. Have the DTC P0117, P0118, P0506, P0507, P1504, P1102, P0102, and P0103, for engine coolant temperature sensor, mass airflow sensor or IAC valve been set beside P1103?	Yes	Go to applicable DTC and repair or replace as necessary. Go to step 6.
		No	Go to next step.
3	Start the engine. Access MAF V PID. Check MAF V PID. Is MAF V PID okay?	Yes	Go to step 6.
		No	Go to next step.
4	Inspect for intake air leaks around mass airflow sensor. Is there an air leak around the mass airflow sensor?	Yes	Repair or replace if necessary, then go to step 6.
		No	Go to next step.
5	Remove the mass airflow sensor. Check if there is any blockage on the screen or any damages. Is mass airflow sensor okay?	Yes	Go to next step.
		No	Remove any blockage on the screen if any blockage is found. Replace the mass airflow sensor as necessary. Go to step 6.
6	Clear diagnostic trouble code from memory. Is same code No. present after performing "After Repair Procedure"?	Yes	Get assistance from Technical Hotline, then replace PCM if necessary.
		No	Troubleshooting completed.

DTC P1122	Throttle position is CLOSED stuck
DETECTION CONDITION	• Throttle valve position is below 12.5% when engine coolant temperature is above 80 °C {176 °F} and mass intake air flow is above 63.2 g/sec {2.23 oz/sec.}
POSSIBLE CAUSE	• Throttle position sensor malfunction or substandard performance • Mass air flow sensor malfunction or substandard performance • Open or short circuit in wiring from throttle position sensor terminal C to PCM terminal 3E • Open or short circuit in wiring from mass air flow sensor terminal B to PCM terminal 2L • Open circuit in wiring from throttle position sensor terminal B to PCM terminal 3F • Open circuit in wiring from mass air flow sensor terminal A to PCM terminal 3C • Open or short circuit in wiring from main relay terminal D to mass air flow sensor terminal C

STEP	INSPECTION		ACTION
1	Have FREEZE FRAME PID DATA been recorded?	Yes	Go to next step.
		No	Record FREEZE FRAME PID DATA on repair order, then go to next step.
2	Do throttle position sensor connector, mass air flow sensor connector, IAC valve connector and PCM connector have poor connection?	Yes	Repair or replace connector, then go to step 6.
		No	Go to next step.
3	Implement PID/DATA MONITOR AND RECORD (TP V) of DIAGNOSTIC DATA LINK by using NGS. Is voltage as specified?	Yes	Go to next step.
		No	Inspect throttle position sensor. ☞ 01–40 THROTTLE POSITION SENSOR INSPECTION (Substandard performance), then go to step 6.
4	Implement PID/DATA MONITOR AND RECORD (MAF V) of DIAGNOSTIC DATA LINK by using NGS. Is voltage as specified?	Yes	Go to next step.
		No	Inspect mass air flow sensor (substandard performance), then go to step 6.
5	Clear diagnostic trouble code from memory. Is same code No. present after performing "After Repair Procedure"?	Yes	Get assistance from Technical Hotline, then replace PCM if necessary.
		No	Intermittent poor connection in harness or connector. Repair connector and/or harness, then go to next step.
6	Clear diagnostic trouble code from memory. Is there a diagnostic trouble code present after performing "After Repair Procedure"?	Yes	Go to applicable DTC inspection.
		No	Troubleshooting completed.

(MASS AIR FLOW SENSOR)

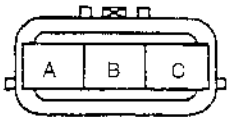

(THROTTLE POSITION SENSOR)

HARNESS SIDE CONNECTOR
(VIEW FROM TERMINAL CONNECTOR)

X5U101WE8

DTC P1123	Throttle position is OPEN stuck
DETECTION CONDITION	• Throttle valve position is above 50% when engine speed is above 500 rpm and mass intake air flow is below 5.3 g/sec {0.187 oz/sec.}
POSSIBLE CAUSE	• Throttle position sensor malfunction or substandard performance • Mass air flow sensor malfunction or substandard performance • Open or short circuit in wiring from throttle position sensor terminal C to PCM terminal 3E • Open or short circuit in wiring from mass air flow sensor terminal B to PCM terminal 2L • Open circuit in wiring from throttle position sensor terminal A to PCM terminal 2I • Open circuit in wiring from throttle position sensor terminal B to PCM terminal 3F • Open circuit in wiring from mass air flow sensor terminal A to PCM terminal 3C • Open or short circuit in wiring from main relay terminal D to mass air flow sensor terminal C

STEP	INSPECTION		ACTION
1	Have FREEZE FRAME PID DATA been recorded?	Yes	Go to next step.
		No	Record FREEZE FRAME PID DATA on repair order, then go to next step.
2	Do throttle position sensor connector, mass air flow sensor connector and PCM connector have poor connection?	Yes	Repair or replace connector, then go to step 8.
		No	Go to next step.
3	Inspect throttle body. Is throttle valve opened according to accelerator pedal being depressed? And is throttle valve closed according to accelerator pedal being released?	Yes	Go to next step.
		No	Inspect throttle body and accelerator cable, then go to step 8.
4	Verify stored DTC. Have DTCs P0102, P0103, P0122 and/or P0123 been stored?	Yes	Inspect and repair DTC P0102, P0103, P0122 or P0123, then go to step 7.
		No	Go to next step.
5	Implement PID/DATA MONITOR AND RECORD (TP V) of DIAGNOSTIC DATA LINK by using NGS. Is voltage as specified?	Yes	Go to next step.
		No	Inspect throttle position sensor. ☞ 01–40 THROTTLE POSITION SENSOR INSPECTION (Substandard performance), then go to step 8.
6	Implement PID/DATA MONITOR AND RECORD (MAF V) of DIAGNOSTIC DATA LINK by using NGS. Is voltage as specified?	Yes	Go to next step.
		No	Inspect mass air flow sensor (substandard performance), then go to step 8.
7	Clear diagnostic trouble code from memory. Is same code No. present after performing "After Repair Procedure"?	Yes	Get assistance from Technical Hotline, then replace PCM if necessary.
		No	Intermittent poor connection in harness or connector. Repair connector and/or harness, then go to next step.
8	Clear diagnostic trouble code from memory. Is there a diagnostic trouble code present after performing "After Repair Procedure"?	Yes	Go to applicable DTC inspection.
		No	Troubleshooting completed.

(MASS AIR FLOW SENSOR)

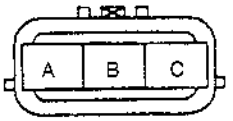

(THROTTLE POSITION SENSOR)

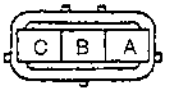

HARNESS SIDE CONNECTOR
(VIEW FROM TERMINAL CONNECTOR)

X5U101WE7

DTC P1135	Front heated oxygen sensor heater circuit low
DETECTION CONDITION	PCM voltage is below 5.8 V when no power is supplied (during 322—327 sec. after engine start) to heated oxygen sensor heater (front)
POSSIBLE CAUSE	• Heated oxygen sensor heater (front) malfunction • Open or short to ground circuit in wiring from heated oxygen sensor (front) terminal C to ignition switch • Open or short to ground circuit in wiring from heated oxygen sensor (front) terminal D to PCM terminal 1U

STEP	INSPECTION		ACTION
1	Has FREEZE FRAME PID DATA been recorded?	Yes	Go to next step.
		No	Record FREEZE FRAME PID DATA on repair order, then go to next step.
2	Does heated oxygen sensor (front) connector or PCM connector have poor connection?	Yes	Repair or replace connector, then go to step 8.
		No	Go to next step.
3	Is PCM terminal 1U voltage okay?	Yes	Go to step 7.
		No	Go to next step.
4	Disconnect heated oxygen sensor (front) harness side connector and turn ignition switch to ON. Is there any battery positive voltage at harness side connector terminal C?	Yes	Go to next step.
		No	Inspect for open or short to ground circuit in wiring harness (Ignition switch — Heated oxygen sensor (front) terminal C), and repair or replace. Then go to step 8.
5	Is there any continuity between harness side connector terminal D and PCM terminal 1U?	Yes	Go to next step.
		No	Repair or replace wiring harness, then go to step 8.
6	Is there any continuity between heated oxygen sensor (front) side connector terminal D and C?	Yes	Go to next step.
		No	Replace heated oxygen sensor (front), then go to step 8.
7	Clear diagnostic trouble code from memory. Is same code No. present after performing "After Repair Procedure"?	Yes	Get assistance from Technical Hotline/your distributor, then replace PCM if necessary.
		No	Intermittent poor connection in harness or connector. Repair connector and/or harness, then go to next step.
8	Clear diagnostic trouble code from memory. Is there any diagnostic trouble code present after performing "After Repair Procedure"?	Yes	Go to applicable DTC inspection.
		No	Troubleshooting completed.

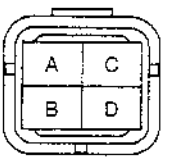

HARNESS SIDE CONNECTOR
(VIEW FROM TERMINAL CONNECTOR)

X5U101WDV

DTC P1136	Front heated oxygen sensor heater circuit high
DETECTION CONDITION	PCM voltage is above 11.5 V when power is supplied to heated oxygen sensor heater (front)
POSSIBLE CAUSE	• Heated oxygen sensor heater (front) malfunction • Short power circuit in wiring from heated oxygen sensor (front) terminal D to PCM terminal 1U

STEP	INSPECTION		ACTION
1	Has FREEZE FRAME PID DATA been recorded?	Yes	Go to next step.
		No	Record FREEZE FRAME PID DATA on repair order, then go to next step.
2	Is PCM terminal 1U voltage okay?	Yes	Go to step 4.
		No	Go to next step.
3	Disconnect heated oxygen sensor (front) harness side connector and turn ignition switch to ON. Is there any battery positive voltage at harness side connector terminal D?	Yes	Go to next step.
		No	Check for short to power circuit in wiring harness (Heated oxygen sensor (front) terminal D — PCM), and repair or replace. Then go to step 5.

STEP	INSPECTION		ACTION
4	Clear diagnostic trouble code from memory. Is same code No. present after performing "After Repair Procedure"?	Yes	Get assistance from Technical Hotline/your distributor, then replace PCM if necessary.
		No	Intermittent poor connection in harness or connector. Repair connector and/or harness, then go to next step.
5	Clear diagnostic trouble code from memory. Is there any diagnostic trouble code present after performing "After Repair Procedure"?	Yes	Go to applicable DTC inspection.
		No	Troubleshooting completed.

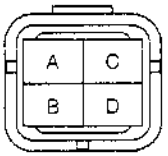

HARNESS SIDE CONNECTOR
(VIEW FROM TERMINAL CONNECTOR)

X5U101WDW

DTC P1141	Rear heated oxygen sensor heater circuit low
DETECTION CONDITION	• PCM voltage is below 5.8 V when no power is supplied (during 322—327 sec. after engine start) to heated oxygen sensor heater (rear)
POSSIBLE CAUSE	• Heated oxygen sensor heater (rear) malfunction • Open or short to ground circuit in wiring from heated oxygen sensor (rear) terminal C to ignition switch • Open or short to ground circuit in wiring from heated oxygen sensor (rear) terminal D to PCM terminal 3V

STEP	INSPECTION		ACTION
1	Has FREEZE FRAME PID DATA been recorded?	Yes	Go to next step.
		No	Record FREEZE FRAME PID DATA on repair order, then go to next step.
2	Does heated oxygen sensor (rear) connector or PCM connector have poor connection?	Yes	Repair or replace connector, then go to step 8.
		No	Go to next step.
3	Is PCM terminal 3V voltage okay?	Yes	Go to step 7.
		No	Go to next step.
4	Disconnect heated oxygen sensor (rear) harness side connector and turn ignition switch to ON. Is there battery positive voltage at harness side connector terminal C?	Yes	Go to next step.
		No	Check for open or short to ground circuit in wiring harness (Ignition switch — Heated oxygen sensor (rear) terminal C), and repair or replace. Then go to step 8.
5	Is there any continuity between harness side connector terminal D and PCM terminal 3V?	Yes	Go to next step.
		No	Repair or replace wiring harness, then go to step 8.
6	Is there any continuity between heated oxygen sensor (rear) side connector terminal D and C?	Yes	Go to next step.
		No	Replace heated oxygen sensor (rear), then go to step 8.
7	Clear diagnostic trouble code from memory. Is same code No. present after performing "After Repair Procedure"?	Yes	Get assistance from Technical Hotline/your distributor, then replace PCM if necessary.
		No	Intermittent poor connection in harness or connector. Repair connector and/or harness, then go to next step.
8	Clear diagnostic trouble code from memory. Is there any diagnostic trouble code present after performing "After Repair Procedure"?	Yes	Go to applicable DTC inspection.
		No	Troubleshooting completed.

(EXCEPT CALIFORNIA EMISSION REGULATIONS APPLICABLE MODEL)

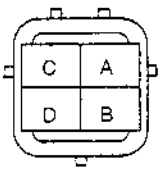

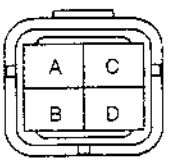

(CALIFORNIA EMISSION REGULATIONS APPLICABLE MODEL)

HARNESS SIDE CONNECTOR
(VIEW FROM TERMINAL CONNECTOR)

X5U101WDX

DTC P1142	Rear heated oxygen sensor heater circuit high
DETECTION CONDITION	• PCM voltage is above 11.5 V when power is supplied to heated oxygen sensor heater (rear)
POSSIBLE CAUSE	• Heated oxygen sensor heater (rear) malfunction • Short to power circuit in wiring from heated oxygen sensor (rear) terminal D to PCM terminal 3V

STEP	INSPECTION		ACTION
1	Has FREEZE FRAME PID DATA been recorded?	Yes	Go to next step.
		No	Record FREEZE FRAME PID DATA on repair order, then go to next step.
2	Is PCM terminal 3V voltage okay?	Yes	Go to step 4.
		No	Go to next step.
3	Disconnect heated oxygen sensor (rear) harness side connector and turn ignition switch to ON. Is there battery positive voltage at harness side connector terminal D?	Yes	Go to next step.
		No	Inspect for short to power circuit in wiring harness (Heated oxygen sensor (rear) terminal D — PCM), and repair or replace. Then go to step 5.
4	Clear diagnostic trouble code from memory. Is same code No. present after performing "After Repair Procedure"?	Yes	Get assistance from Technical Hotline/your distributor, then replace PCM if necessary.
		No	Intermittent poor connection in harness or connector. Repair connector and/or harness, then go to next step.
5	Clear diagnostic trouble code from memory. Is there any diagnostic trouble code present after performing "After Repair Procedure"?	Yes	Go to applicable DTC inspection.
		No	Troubleshooting completed.

(EXCEPT CALIFORNIA EMISSION REGULATIONS APPLICABLE MODEL)

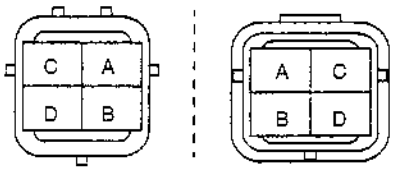

(CALIFORNIA EMISSION REGULATIONS APPLICABLE MODEL)

HARNESS SIDE CONNECTOR
(VIEW FROM TERMINAL CONNECTOR)

X5U101WDY

DTC P1170	Heated oxygen sensor (Front) (Inversion)
DETECTION CONDITION	When heated oxygen sensor (front) signal stays above 0.45 V for 42 seconds after the engine has reached normal operating temperature and running at 1,500 rpm or over
POSSIBLE CAUSE	• Heated oxygen sensor (front) deterioration • Heated oxygen sensor heater (front) malfunction • Fuel injector malfunction • Pressure regulator malfunction • Pulsation damper malfunction • Fuel pump malfunction • Fuel filter clogged • Fuel delivery hose clogged or leaking • Fuel return hose clogged • Leakage intake-air system • Leakage exhaust system • Positive crankcase ventilation valve malfunction • Purge solenoid valve malfunction • Purge solenoid hoses hooked up incorrectly • Ignition coil malfunction • Ignition control module malfunction • Insufficient compression • Mass air flow sensor malfunction • Engine coolant temperature malfunction • Throttle position sensor malfunction • EGR system malfunction • Open or short circuit in wiring harness • Poor connection of connector • Vacuum hoses damaged or loose **Warning** **The following troubleshooting flow chart contains the fuel system diagnosis and repair procedures. Read the following warnings before performing the fuel system services:** • **Fuel vapor is hazardous. It can easily ignite, causing serious injury and damage. Always keep sparks and flames away from fuel.** • **Fuel line spills and leaks are dangerous. Fuel can ignite and cause serious injuries or death and damage. Fuel can also irritate skin and eyes. To prevent this, always complete "BEFORE REPAIR PROCEDURE" and "AFTER REPAIR PROCEDURE" described in this manual.** **☞ 01–14 BEFORE REPAIR PROCEDURE** **☞ 01–14 AFTER REPAIR PROCEDURE**

STEP	INSPECTION		ACTION
1	Has FREEZE FRAME PID DATA been recorded?	Yes	Go to next step.
		No	Record FREEZE FRAME PID DATA on repair order, then go to next step.
2	Verify stored DTC. Have DTCs P0102, P0103, P0117, P0118, P0122, P0123, P0443, P0500, P1102, P1103, P1122, P1123, P1496, P1497, P1498 and/or P1499 been stored?	Yes	Inspect or repair DTC P0102, P0103, P0117, P0118, P0122, P0123, P0443, P0504, P1102, P1103, P1122, P1123, P1496, P1497, P1498 or P1499, then go to step 33.
		No	Go to next step.
3	Is DTC P1170 on FREEZE FRAME PID DATA?	Yes	Go to next step.
		No	Inspect or repair DTC on FREEZE FRAME PID DATA, then go to step 33.
4	Temporarily clear DTC . Verify RPM, LOAD, ECT and VSS on FREEZE FRAME PID DATA. Drive for approx. 1 minute under same condition. Is P1170 stored on PENDING TROUBLE CODE?	Yes	Trouble is in process. Go to next step.
		No	Go to "01–01A ENGINE SYSTEM TROUBLESHOOTING, INTERMITTENT CONCERNS".
5	Implement PID/DATA MONITOR AND RECORD (ECT V, RPM, TP V) from DIAGNOSTIC DATA LINK by using NGS tester. Is there any signal that is far out of specification when ignition switch is at ON, and run engine at idle?	Yes	Implement "01–01A ENGINE DIAGNOSTIC INSPECTION, Input System Investigation Procedure" and repair or replace, then go to step 33.
		No	Go to next step.
6	Continue monitoring items on previous step. Is there any input signal which causes drastic changes when it is set to be in trouble condition?	Yes	Implement "01–01A ENGINE DIAGNOSTIC INSPECTION, Input System Investigation Procedure" and repair or replace, then go to step 33.
		No	Go to next step.

STEP	INSPECTION		ACTION
7	Inspect exhaust system, upstream from heated oxygen sensor (front). Is there any gas leak?	Yes	Repair or replace faulty exhaust parts, then go to step 33.
		No	Go to next step.
8	Inspect installation of heated oxygen sensor (front). Is it okay?	Yes	Go to next step.
		No	Install heated oxygen sensor properly, then go to step 33.
9	Implement PID/DATA MONITOR AND RECORD (FHO2S) from DIAGNOSTIC DATA LINK by using NGS tester. Is voltage on heated oxygen sensor as follows while racing engine (in neutral)? • More than 0.45 V when suddenly accelerator pedal: rich condition • Less than 0.45 V during fuel cut: lean condition	Yes	Go to next step.
		No	Inspect and repair or replace faulty heated oxygen sensor (front), harness, connector or terminal. ☞ 01–40 HEATED OXYGEN SENSOR INSPECTION Then go to step 33.
10	Inspect heated oxygen sensor heater (front) and related harness, connector and terminal. ☞ 01–40 HEATED OXYGEN SENSOR INSPECTION Is it okay?	Yes	Go to next step.
		No	Repair or replace faulty heated oxygen sensor (front), harness, connector or terminal, then go to step 33.
11	Inspect for open, poor connection and other problems on following harnesses, connectors and terminals (for fuel injector at each cylinders): • From main relay to fuel injector • From fuel injector to PCM Is there any trouble?	Yes	Repair or replace faulty harness, connector or terminal, then go to step 33.
		No	Go to next step.
12	Inspect injection amount of each injector. ☞ 01–14 FUEL INJECTOR INSPECTION, Volume Test Is there any fuel injector in abnormal condition for amount or condition of injection?	Yes	Replace faulty fuel injector, then go to step 33.
		No	Go to next step.
13	Inspect LONGFT1 and SHRTFT1 on FREEZE FRAME PID DATA which are verified at step 1. Does it shift to negative side: lean side?	Yes	Go to next step.
		No	Go to step 18.
14	Inspect purge control system. ☞ 01–01A ENGINE SYSTEM INSPECTION, Purge Control Inspection Is it okay?	Yes	Go to next step.
		No	By following system inspection, repair or replace faulty parts, then go to step 33.
15	Inspect positive crankcase ventilation operation. ☞ 01–16 PCV VALVE INSPECTION Is it okay?	Yes	Go to next step.
		No	Replace positive crankcase ventilation valve, then go to step 33.
16	Inspect fuel line pressure under trouble condition. ☞ 01–01A ENGINE SYSTEM INSPECTION, Fuel line Pressure Inspection Is fuel line pressure okay?	Yes	Inspect on fuel leakage and injection amount ☞ 01–14 FUEL INJECTOR INSPECTION Replace faulty fuel injector, then go to step 33.
		No	Go to next step.
17	Inspect pressure regulator. ☞ 01–14 PRESSURE REGULATOR INSPECTION Is it okay?	Yes	Inspect and repair clogged fuel return hose, then go to step 33.
		No	Replace pressure regulator, then go to step 33.
18	Inspect for air suction at followings: • From air cleaner to throttle body • From throttle body to dynamic chamber • From dynamic chamber to intake manifold Visually inspect cracks, and damages, and check fluctuation after spraying rust penetrating agent, then select air suction area. Can air suction be confirmed?	Yes	Repair or replace source of air suction, then go to step 33.
		No	Go to next step.
19	Inspect for air suction on vacuum hose which has negative pressure on intake manifold, same way as previous step. Can air suction be confirmed?	Yes	Repair or replace source of air suction, then go to step 33.
		No	Go to next step.
20	Inspect fuel line pressure under trouble condition. ☞ 01–01A ENGINE SYSTEM INSPECTION, Fuel Line Pressure Inspection Is fuel line pressure okay?	Yes	Go to step 27.
		No	Go to next step.

STEP	INSPECTION		ACTION
21	Inspect fuel pump maximum pressure. ☞ 01–14 FUEL PUMP INSPECTION, Fuel Pump Maximum Pressure Is it okay?	Yes	Go to next step.
		No	Replace fuel pump, then go to step 33.
22	Inspect pulsation damper for leaks and clogging. Is it okay?	Yes	Go to next step.
		No	Replace pulsation damper, then go to step 33.
23	Inspect clogging at fuel filter (high-pressure side). Is there any foreign material in fuel on fuel pump side of filter?	Yes	Go to next step.
		No	Go to step 25.
24	Inspect inside of fuel tank for foreign materials and stain. Is inside of fuel tank okay?	Yes	Replace fuel filter (high-pressure side), then go to step 33.
		No	Clean inside of fuel tank and fuel filter (low-pressure side). Replace fuel filter (high-pressure side), then go to step 33.
25	Inspect for leaks and clogging in fuel line from fuel distributor to fuel pump. Is it okay?	Yes	Go to next step.
		No	Repair or replace source of fuel leaks or clogging, then go to step 33.
26	Inspect for leaks in fuel line from fuel filter (high-pressure side) to fuel tank (return side). Is it okay?	Yes	Replace pressure regulator, then go to step 33.
		No	Repair or replace source of fuel leaks, then go to step 33.
27	Verify blinking condition on each cylinders by setting timing light on high-tension lead under trouble condition. Does it blink regularly and stable?	Yes	Go to step 30.
		No	Go to next step.
28	Inspect resistance of ignition coil. ☞ 01–18 IGNITION COIL INSPECTION Is it okay?	Yes	Go to next step.
		No	Replace ignition coil, then go to step 33.
29	Inspect ignition control module. ☞ 01–18 IGNITION CONTROL MODULE INSPECTION Is it okay?	Yes	Inspect harness for poor connection, contacting body and wear from ignition control module to PCM. Repair faulty harness, then go to step 33.
		No	Replace ignition coil, then go to step 33.
30	Inspect EGR control system. ☞ 01–01A ENGINE SYSTEM INSPECTION, EGR Control Inspection Is it okay?	Yes	Go to next step.
		No	By following system inspection, repair faulty parts, then go to step 33.
31	Remove radiator cap. Implement procedure to bleed air from engine coolant, then run engine at idle. Is there any small bubble which makes engine coolant white at filling opening? **Note** • Large bubbles are normal since they are remaining air coming out from engine coolant passage.	Yes	Air gets in from poor sealing on head gasket or other areas between combustion chamber and engine coolant passage. Repair or replace faulty parts, then go to step 33.
		No	Go to next step.
32	Inspect engine compression. ☞ 01–10 COMPRESSION INSPECTION Is it okay?	Yes	Go to next step.
		No	Implement engine overhaul, then go to next step.
33	Clear DTC. Verify stored PENDING TROUBLE CODE and DTC, after running under DRIVE MODE. Is there any PENDING TROUBLE CODE and/or DTC stored?	Yes	Go to applicable DTC inspection. **Note** • If malfunction remains even though all inspections have been performed, get assistance from Technical Hotline/your distributor.
		No	Troubleshooting completed.

DTC P1345	No SGC signal
DETECTION CONDITION	No SGC signal input from camshaft position sensor while engine rotates
POSSIBLE CAUSE	• Camshaft position sensor malfunction • Open or short circuit in wiring from camshaft position sensor 3-pin connector terminal A to main relay terminal D • Open or short circuit in wiring from PCM terminal 2H to camshaft position sensor 3-pin connector terminal B

STEP	INSPECTION		ACTION
1	Have FREEZE FRAME PID DATA been recorded?	Yes	Go to next step.
		No	Record FREEZE FRAME PID DATA on repair order, then go to next step.
2	Does camshaft position sensor 3-pin connector or PCM connector have poor connection?	Yes	Repair or replace connector, then go to step 9.
		No	Go to next step.
3	Disconnect camshaft position sensor 3-pin connector. Turn ignition switch to ON. Is there any battery positive voltage at connector terminal A?	Yes	Go to next step.
		No	Check for open or short circuit in wiring harness. (Main relay terminal D — Camshaft position sensor 3-pin connector terminal A)
4	Is there any continuity between connector terminal B and PCM terminal 2H?	Yes	Go to next step.
		No	Repair or replace wiring harness, then go to step 9.
5	Is there continuity between connector terminal C and PCM terminal 3C?	Yes	Go to next step.
		No	Repair or replace wiring harness, then go to step 9.
6	Is PCM terminal 2H voltage okay?	Yes	Go to step 9.
		No	Go to next step.
7	Is camshaft position sensor okay? ☞ 01–40 CAMSHAFT POSITION SENSOR INSPECTION	Yes	Go to next step.
		No	Replace distributor, then go to step 9.
8	Clear diagnostic trouble code from memory. Is same code No. present after performing "After Repair Procedure"?	Yes	Get assistance from Technical Hotline, then replace PCM if necessary.
		No	Intermittent poor connection in harness or connector. Repair connector and/or harness, then go to next step.
9	Clear diagnostic trouble code from memory. Is there any diagnostic trouble code present after performing "After Repair Procedure"?	Yes	Go to applicable DTC inspection.
		No	Troubleshooting completed.

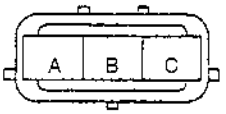

HARNESS SIDE CONNECTOR
(VIEW FROM TERMINAL SIDE)

X5U10-WDZ

DTC P1449	Canister drain cut valve (CDCV) open or short
DETECTION CONDITION	• Open or short circuit is observed in canister drain cut valve system when ignition switch is turned ON
POSSIBLE CAUSE	• Canister drain cut valve malfunction • Open or short circuit in wiring from canister drain cut valve terminal A to main relay terminal D • Open or short circuit in wiring from canister drain cut valve terminal B to PCM terminal 3U

STEP	INSPECTION		ACTION
1	Does canister drain cut valve connector or PCM connector have poor connection?	Yes	Repair or replace connector, then go to step 8.
		No	Go to next step.
2	Implement PID/DATA MONITOR AND RECORD (CDCV) of DIAGNOSTIC DATA LINK by using NGS tester. Does it operate normally?	Yes	Go to step 6.
		No	Go to next step.

STEP	INSPECTION		ACTION
3	Disconnect canister drain cut valve connector. Turn ignition switch to ON. Is there battery positive voltage at harness side connector terminal A?	Yes	Go to next step.
		No	Check for open or short circuit in wiring harness. (Main relay terminal D — Canister drain cut valve terminal A), then go to step 7.
4	Is there continuity between canister drain cut valve harness side connector terminal B and PCM terminal 3U?	Yes	Go to next step.
		No	Repair or replace wiring harness, then go to step 7.
5	Is there continuity between canister drain cut valve terminals A and B?	Yes	Go to next step.
		No	Replace canister drain cut valve, then go to step 7.
6	Clear diagnostic trouble code from memory. Is same code No. present after performing "After Repair Procedure"?	Yes	Get assistance from Technical Hotline/your distributor, then replace PCM if necessary.
		No	Intermittent poor connection in harness or connector. Repair connector and/or harness, then go to next step.
7	Clear diagnostic trouble code from memory. Is there any diagnostic trouble code present after performing "After Repair Procedure"?	Yes	Go to applicable DTC inspection.
		No	Troubleshooting completed.

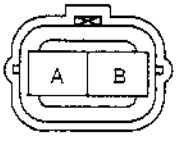

HARNESS SIDE CONNECTOR
(VIEW FROM TERMINAL CONNECTOR)

X5U101WE0

DTC P1450	Evaporative emission control system malfunction
DETECTION CONDITION	Fuel tank pressure is less than –3.9 kPa {–29.4 mmHg, –1.2 inHg} for more than 10 sec. in 3.1—400 sec. after engine is started in cold condition and vehicle speed is less than 100 km {62 mph}
POSSIBLE CAUSE	• Purge solenoid valve malfunction • Canister drain cut valve malfunction • Tank pressure control valve malfunction • Vent cut valve malfunction • Charcoal canister malfunction • Air filter clogged • Check valve (two-way) clogged • Evaporative hose clogged (drain) • Fuel tank pressure sensor malfunction • Engine coolant temperature sensor malfunction • Vehicle speed sensor malfunction • Open or short circuit in wiring harness • Poor connection of connector

STEP	INSPECTION		ACTION
1	Has FREEZE FRAME PID DATA been recorded?	Yes	Go to next step.
		No	Record FREEZE FRAME PID DATA on repair order, then go to next step.
2	Verify stored DTC. Have DTCs P0117, P0118, P0335, P0443, P0500 and/or P1449 been stored?	Yes	Inspect and repair DTC P0117, P0118, P0335, P0443, P0500 or P1449, then go to step 16.
		No	Go to next step.
3	Implement PID/DATA MONITOR AND RECORD (BARO V, ETC V, FTL V, FTP V, IAT V, MAF V, TP V, VS) from DIAGNOSTIC DATA LINK by using NGS tester. Is there any signal that is far out of specification when ignition switch is at ON and run engine at idle?	Yes	Implement "01–01A ENGINE DIAGNOSTIC INSPECTION, Input System Investigation Procedure" and repair or replace, then go to step 16.
		No	Go to next step.
4	Carry out IGNITION ON TEST from SIMULATION TEST by using NGS tester. Is canister drain cut valve and tank pressure control valve operating sound heard when CDCV is turned from OFF to ON?	Yes	Go to next step.
		No	Go to step 7.

STEP	INSPECTION		ACTION
5	Carry out IDLING TEST from SIMULATION TEST by using NGS tester. Detach vacuum hose on charcoal canister at purge solenoid valve side, then while increasing PRG V from 0% to 100%, measure intake manifold negative pressure using vacuum gauge. Does it change from atmosphere pressure to intake manifold negative pressure?	Yes	Go to step 8.
		No	Go to next step.
6	Inspect purge solenoid valve for air leak and open stuck. ☞ 01–16 PURGE SOLENOID VALVE INSPECTION Is it okay?	Yes	Inspect and repair or replace for open, poor connection and other problems on following harnesses, connectors and terminals: • From main relay to purge solenoid valve • From purge solenoid valve to PCM Then go to step 16.
		No	Replace purge solenoid valve, then go to step 16.
7	Inspect canister drain cut valve for air tightness and closed stuck. ☞ 01–16 CANISTER DRAIN CUT VALVE INSPECTION Is it okay?	Yes	Inspect and repair or replace for open, poor connection and other problems on following harnesses, connectors and terminals: • From main relay to canister drain cut valve • From canister drain cut valve to PCM Then go to step 16.
		No	Replace canister drain cut valve, then go to step 16.
8	Remove charcoal canister and inspect for clogging. ☞ 01–16 CHARCOAL CANISTER INSPECTION Is it okay?	Yes	Go to next step.
		No	Replace charcoal canister, then go to step 16.
9	Find hose, which is led from tank pressure control valve to charcoal canister. Clamp on this hose and remove filler cap. Implement PID/DATA MONITOR AND RECORD (FTP, FTP V) from DIAGNOSTIC DATA LINK by using NGS tester. After FTP and FTPV values same as atmospheric pressure?	Yes	Install filler cap, then go to step 11.
		No	Go to next step.
10	Inspect fuel tank pressure sensor. ☞ 01–40 FUEL TANK PRESSURE SENSOR INSPECTION Is it okay?	Yes	Go to next step.
		No	Repair fuel tank pressure sensor, then go to step 16.
11	Inspect tank pressure control valve for air tightness and closed stuck. ☞ 01–16 TANK PRESSURE CONTROL VALVE INSPECTION Is it okay?	Yes	Go to next step.
		No	Replace tank pressure control valve, then go to step 16.
12	Remove tank pressure control valve, then attach T pipe and vacuum pump. Apply negative pressure by using vacuum pump. Implement PID/DATA MONITOR AND RECORD (FTP, FTP V) from DIAGNOSTIC DATA LINK by using NGS tester. Do FTP, FTPV values change on negative pressure side?	Yes	Go to step 14.
		No	Go to next step.
13	Inspect vent cut valve for clogging. ☞ 01–14 VENT CUT VALVE INSPECTION Is it okay?	Yes	Inspect and repair or replace clogged on following hoses: • From charcoal canister to vent cut valve • From vent cut valve to fuel tank Then go to step 16.
		No	Replace filler pipe assembly, then go to step 16.
14	Remove and inspect check valve (two-way) for clogging. ☞ 01–16 CHECK VALVE (TWO-WAY) INSPECTION Is it okay?	Yes	Go to next step.
		No	Replace check valve (two-way), then go to step 16.

STEP	INSPECTION		ACTION
15	Remove and inspect air filter for clogging. Is it okay?	Yes	Inspect and repair or replace for clogged on following hoses: • From charcoal canister to canister drain cut valve • From canister drain cut valve to air filter • From air filter to two-way check valve Then go to next step.
		No	Replace air filter, then go to next step.
16	Implement PID/DATA MONITOR AND RECORD from DIAGNOSTIC DATA LINK by using NGS tester. Verify that following PID's are within indicated ranges when ignition switch at ON. • BARO V 72.0 kPa {21.3 inHg} or higher • ECT V 0—35 °C {32—95 °F} • IAT 10—60 °C {50—140 °F} Verify that fuel gauge reads with 1/4—3/4 of tank. Were readings within indicated ranges?	Yes	Correct condition, then go to next step.
		No	Take corrective action, then go to next step. **Note** • Readings need to be in the indicated ranges to perform DRIVE MODE.
17	Clear DTC. Run DRIVE MODE. ☞ 01–01A ENGINE DIAGNOSTIC INSPECTION, Fuel Tank Pressure Graph Recording Procedure Verify that CDCV and FTP graphs. Is there any problem detected?	Yes	Go back to step 2. **Note** • If malfunction remains even though all inspections have been performed, get assistance from Technical Hotline/your distributor.
		No	Go to next step.
18	Verify stored PENDING TROUBLE CODE, DTC and DIAGNOSTIC MONITORING TEST RESULTS. Is there any code stored and/or out of specification?	Yes	Go to appropriate DTC inspection.
		No	Troubleshooting completed.

DTC P1487	EGR boost sensor solenoid valve open or short
DETECTION CONDITION	• Open or short circuit is observed in EGR boost sensor solenoid valve system when ignition switch is turned ON
POSSIBLE CAUSE	• EGR boost sensor solenoid valve malfunction • Open or short circuit in wiring from EGR boost sensor solenoid valve terminal A to main relay terminal D • Open or short circuit in wiring from EGR boost sensor solenoid valve B to PCM terminal 3T

STEP	INSPECTION		ACTION
1	Does EGR boost sensor solenoid valve connector or PCM connector have poor connection?	Yes	Repair or replace connector, then go to step 7.
		No	Go to next step.
2	Implement PID/DATA MONITOR AND RECORD (EGRB V) of DIAGNOSTIC DATA LINK by using NGS tester. Does it operate normally?	Yes	Go to step 6.
		No	Go to next step.
3	Disconnect EGR boost sensor solenoid valve connector. Turn ignition switch to ON. Is there battery positive at connector terminal A?	Yes	Go to next step.
		No	Check for open or short circuit in wiring harness (Main relay terminal D — EGR boost sensor solenoid valve terminal A), then go to step 7.
4	Is there continuity between connector terminal B and PCM terminal 3T?	Yes	Go to next step.
		No	Repair or replace wiring harness, then go to step 7.
5	Is there continuity between EGR boost sensor solenoid valve terminals A and B?	Yes	Go to next step.
		No	Replace EGR boost sensor solenoid valve, then go to step 7.
6	Clear diagnostic trouble code from memory. Is same code No. present after performing "After Repair Procedure"?	Yes	Get assistance from Technical Hotline/your distributor, then replace PCM if necessary
		No	Intermittent poor connection in harness or connector. Repair connector and/or harness, then go to next step.

STEP	INSPECTION		ACTION
7	Clear diagnostic trouble code from memory. Is there any diagnostic trouble code present after performing "After Repair Procedure"?	Yes	Go to applicable DTC inspection.
		No	Troubleshooting completed.

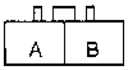

HARNESS SIDE CONNECTOR
(VIEW FROM TERMINAL CONNECTOR)

X5U101WE1

DTC P1496	EGR valve motor coil 1 open or short
DETECTION CONDITION	• Open or short circuit is observed in EGR valve (stepping motor #1 coil) system when ignition switch is turned ON
POSSIBLE CAUSE	• EGR valve (stepping motor #1 coil) malfunction • Open or short circuit in wiring from EGR valve terminal C to main relay terminal D • Open or short circuit in wiring from EGR valve terminal E to PCM terminal 2M

STEP	INSPECTION		ACTION
1	Does EGR valve connector or PCM connector have poor connection?	Yes	Repair or replace as necessary, then go to step 7.
		No	Go to next step.
2	Implement PID/DATA MONITOR AND RECORD (SEGR P) of DIAGNOSTIC DATA LINK by using NGS tester. Is voltage as specified?	Yes	Go to step 6.
		No	Go to next step.
3	Disconnect EGR valve connector. Turn ignition switch ON. Is there battery positive voltage at connector terminal C?	Yes	Go to next step.
		No	Check for open or short circuit in wiring harness (Main relay terminal D — EGR valve terminal C), then go to step 7.
4	Is there continuity between EGR valve connector terminal E and PCM terminal 2M?	Yes	Go to next step.
		No	Repair or replace wiring harness, then go to step 7.
5	Is there continuity between EGR valve connector terminal C and E?	Yes	Go to next step.
		No	Replace EGR valve, then go to step 7.
6	Clear diagnostic trouble code from memory. Is same code No. present after performing "After Repair procedure"?	Yes	Get assistance from Technical Hotline/your distributor, then replace PCM if necessary.
		No	Intermittent poor connection in harness or connector. Repair connector and/or harness, then go to next step.
7	Clear diagnostic trouble code from memory. Is there any diagnostic trouble code present after performing "After Repair Procedure"?	Yes	Go to applicable DTC inspection.
		No	Troubleshooting completed.

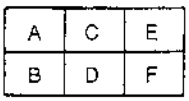

HARNESS SIDE CONNECTOR
(VIEW FROM TERMINAL CONNECTOR)

X5U101WE2

DTC P1497	EGR valve motor coil 2 open or short
DETECTION CONDITION	• Open or short circuit is observed in EGR valve (stepping motor #2 coil) system when ignition switch is turned ON
POSSIBLE CAUSE	• EGR valve (stepping motor #2 coil) malfunction • Open or short circuit in wiring from EGR valve terminal C to main relay terminal D • Open or short circuit in wiring from EGR valve terminal A to PCM terminal 2N

STEP	INSPECTION		ACTION
1	Does EGR valve connector or PCM connector have poor connection?	Yes	Repair or replace as necessary, then go to step 7.
		No	Go to next step.

STEP	INSPECTION		ACTION
2	Implement PID/DATA MONITOR AND RECORD (SEGR P) of DIAGNOSTIC DATA LINK by using NGS tester. Does it operate normally?	Yes	Go to step 6.
		No	Go to next step.
3	Disconnect EGR valve connector. Turn ignition switch ON. Is there battery positive voltage at connector terminal C?	Yes	Go to next step.
		No	Check for open or short circuit in wiring harness (Main relay terminal D — EGR valve terminal C), then go to step 7.
4	Is there continuity between EGR valve connector terminal A and PCM terminal 2N?	Yes	Go to next step.
		No	Repair or replace wiring harness, then go to step 7.
5	Is there continuity between EGR valve connector terminal C and A?	Yes	Go to next step.
		No	Replace EGR valve, then go to step 7.
6	Clear diagnostic trouble code from memory. Is same code No. present after performing "After Repair Procedure"?	Yes	Get assistance from Technical Hotline/your distributor, then replace PCM if necessary.
		No	Intermittent poor connection in harness or connector. Repair connector and/or harness, then go to next step.
7	Clear diagnostic trouble code from memory. Is there any diagnostic trouble code present after performing "After Repair Procedure"?	Yes	Go to applicable DTC inspection.
		No	Troubleshooting completed.

A	C	E
B	D	F

HARNESS SIDE CONNECTOR
(VIEW FROM TERMINAL CONNECTOR)

X5U101WE3

DTC P1498	EGR valve motor coil 3 open or short
DETECTION CONDITION	• Open or short circuit is observed in EGR valve (stepping motor #3 coil) system when ignition switch is turned ON
POSSIBLE CAUSE	• EGR valve (stepping motor #3 coil) malfunction • Open or short circuit in wiring from EGR valve terminal C to main relay terminal D • Open or short circuit in wiring from EGR valve terminal B to PCM terminal 2O

STEP	INSPECTION		ACTION
1	Does EGR valve connector or PCM connector have poor connection?	Yes	Repair or replace as necessary, then go to step 7.
		No	Go to next step.
2	Implement PID/DATA MONITOR AND RECORD (SEGR P) of DIAGNOSTIC DATA LINK by using NGS tester. Does it operate normally?	Yes	Go to step 6.
		No	Go to next step.
3	Disconnect EGR valve connector. Turn ignition switch ON. Is there battery positive voltage at connector terminal C?	Yes	Go to next step.
		No	Check for open or short circuit in wiring harness. (Main relay terminal D — EGR valve terminal C)
4	Is there continuity between EGR valve connector terminal B and PCM terminal 2O?	Yes	Go to next step.
		No	Repair or replace wiring harness.
5	Is there continuity between EGR valve connector terminal C and B?	Yes	Go to next step.
		No	Replace EGR valve.
6	Clear diagnostic trouble code from memory. Is same code No. present after performing "After Repair Procedure"?	Yes	Get assistance from Technical Hotline/your distributor, then replace PCM if necessary.
		No	Intermittent poor connection in harness or connector. Repair connector and/or harness, then go to next step.

STEP	INSPECTION		ACTION
7	Clear diagnostic trouble code from memory. Is there any diagnostic trouble code present after performing "After Repair Procedure"?	Yes	Go to applicable DTC inspection.
		No	Troubleshooting completed.

A	C	E
B	D	F

HARNESS SIDE CONNECTOR
(VIEW FROM TERMINAL CONNECTOR)

X5U101WE4

DTC P1499	EGR valve motor coil 4 open or short
DETECTION CONDITION	• Open or short circuit is observed in EGR valve (stepping motor #4 coil) system when ignition switch is turned ON
POSSIBLE CAUSE	• EGR valve (stepping motor #4 coil) malfunction • Open or short circuit in wiring from EGR valve terminal C to main relay terminal D • Open or short circuit in wiring from EGR valve terminal F to PCM terminal 2P

STEP	INSPECTION		ACTION
1	Does EGR valve connector or PCM connector have poor connection?	Yes	Repair or replace as necessary, then go to step 7.
		No	Go to next step.
2	Implement PID/DATA MONITOR AND RECORD (SEGR P) of DIAGNOSTIC DATA LINK by using NGS tester. Does it operate normally?	Yes	Go to step 7.
		No	Go to next step.
3	Disconnect EGR valve connector. Turn ignition switch ON. Is there battery positive voltage at connector terminal C?	Yes	Go to next step.
		No	Check for open or short circuit in wiring harness (Main relay terminal D — EGR valve terminal C), then go to step 7.
4	Is there continuity between EGR valve connector terminal F and PCM terminal 2P?	Yes	Go to next step.
		No	Repair or replace wiring harness, then go to step 7.
5	Is there continuity between EGR valve connector terminal C and F?	Yes	Go to next step.
		No	Replace EGR valve, then go to step 7.
6	Clear diagnostic trouble code from memory. Is same code No. present after performing "After Repair Procedure"?	Yes	Get assistance from Technical Hotline/your distributor, then replace PCM if necessary.
		No	Intermittent poor connection in harness or connector. Repair connector and/or harness, then go to next step.
7	Clear diagnostic trouble code from memory. Is there any diagnostic trouble code present after performing "After Repair Procedure"?	Yes	Go to applicable DTC inspection.
		No	Troubleshooting completed.

A	C	E
B	D	F

HARNESS SIDE CONNECTOR
(VIEW FROM TERMINAL CONNECTOR)

X5U101WE5

DTC P1504	Idle air control circuit malfunction
DETECTION CONDITION	• PCM detects no voltage from idle air control valve while driving in the following condition ① Except cranking ② At battery positive voltage above 11 V ③ IAC valve actuation time is 0.37—1.43 msec.
POSSIBLE CAUSE	• IAC valve malfunction • Open circuit in wiring from IAC valve terminal A to PCM terminal 3M • Open or short circuit in wiring from IAC valve terminal B to PCM terminal 3O

STEP	INSPECTION		ACTION
1	Have FREEZE FRAME PID DATA been recorded?	Yes	Go to next step.
		No	Record FREEZE FRAME PID DATA on repair order, then go to next step.
2	Do IAC valve connector and PCM connector have poor connection?	Yes	Repair or replace connector, then go to step 7.
		No	Go to next step.
3	Implement PID/DATA MONITOR AND RECORD (IAC V) of DIAGNOSTIC DATA LINK by using NGS. Does it operate normally?	Yes	Go to step 7.
		No	Inspect IAC valve. ☞ 01–13 IDLE AIR CONTROL VALVE INSPECTION Then go to next step.
4	Is there continuity between IAC valve side connector terminal A and PCM terminal 3M?	Yes	Go to next step.
		No	Repair or replace wiring harness, then go to step 7.
5	Is there continuity between IAC valve side connector terminal B and PCM terminal 3O?	Yes	Go to next step.
		No	Repair or replace wiring harness, then go to step 7.
6	Clear diagnostic trouble code from memory. Is same code No. present after performing "After Repair Procedure"?	Yes	Get assistance from Technical Hotline, then replace PCM if necessary.
		No	Intermittent poor connection in harness or connector. Repair connector and/or harness, then go to next step.
7	Clear diagnostic trouble code from memory. Is there a diagnostic trouble code present after performing "After Repair Procedure"?	Yes	Go to applicable DTC inspection.
		No	Troubleshooting completed.

DTC P1523	VICS circuit malfunction
DETECTION CONDITION	• Open or short circuit is observed in VICS solenoid valve system when ignition switch is turned ON
POSSIBLE CAUSE	• VICS solenoid valve malfunction • Open or short circuit in wiring from VICS solenoid valve terminal A to Main relay terminal D • Open or short circuit in wiring from PCM terminal 3Q to VICS solenoid valve terminal B

STEP	INSPECTION		ACTION
1	Have FREEZE FRAME PID DATA been recorded?	Yes	Go to next step.
		No	Record FREEZE FRAME PID DATA on repair order, then go to next step.
2	Does VICS solenoid valve connector PCM connector have poor connection?	Yes	Repair or replace connector, then go to step 8.
		No	Go to next step.
3	Implement PID/DATA MONITOR AND RECORD (VICS V) of DIAGNOSTIC DATA LINK by using NGS tester. Is voltage as specified?	Yes	Go to step 7.
		No	Go to next step.
4	Disconnect purge solenoid valve connector. Turn ignition switch is ON. Is there any battery positive voltage at harness side connector terminal A?	Yes	Go to next step.
		No	Check for open or short circuit in wiring harness (Harness side connector terminal A — Main relay terminal D), then go to step 8.
5	Is there any continuity between harness side connector terminal B and PCM terminal 3Q?	Yes	Go to next step.
		No	Repair or replace wiring harness, then go to step 8.
6	Is there any continuity between VICS solenoid valve terminals?	Yes	Go to next step.
		No	Replace VICS solenoid valve, then go to step 8.

STEP	INSPECTION		ACTION
7	Clear diagnostic trouble code from memory. Is same code No. present after performing "After Repair Procedure"?	Yes	Get assistance from Technical Hotline/your distributor, then replace PCM if necessary.
		No	Intermittent poor connection in harness or connector. Repair connector and/or harness, then go to next step.
8	Clear diagnostic trouble code from memory. Is there any diagnostic trouble code present after performing "After Repair Procedure"?	Yes	Go to applicable DTC inspection.
		No	Troubleshooting completed.

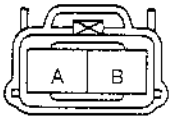

HARNESS SIDE CONNECTOR
(VIEW FROM TERMINAL CONNECTOR)

X5U101WE6

DTC P1562	PCM +BB voltage is low
DETECTION CONDITION	• Back-up voltage of PCM memory is below 1.4 V when not cranking
POSSIBLE CAUSE	• Open circuit in wiring from battery to PCM terminal 1A

STEP	INSPECTION		ACTION
1	Have FREEZE FRAME PID DATA been recorded?	Yes	Go to next step.
		No	Record FREEZE FRAME PID DATA on repair order, then go to next step.
2	Does fuel PCM connector terminal 1A have poor connection?	Yes	Repair or replace connector, then go to step 5.
		No	Go to next step.
3	Is there continuity between battery and PCM terminal 1A?	Yes	Go to next step.
		No	Repair or replace wiring harness, then go to step 5.
4	Clear diagnostic trouble code from memory. Is same code No. present after performing "After Repair Procedure"?	Yes	Get assistance from Technical Hotline, then replace PCM if necessary.
		No	Intermittent poor connection in harness or connector. Repair connector and/or harness, then go to next step.
5	Clear diagnostic trouble code from memory. Is there any diagnostic trouble code present after performing "After Repair Procedure"?	Yes	Go to applicable DTC inspection.
		No	Troubleshooting completed.

DTC P1601	Communication line error (PCM — TCM)
DETECTION CONDITION	• No PCM — TCM communication when ignition switch is turned on
POSSIBLE CAUSE	• Open or short circuit in wiring from PCM terminal 1K to TCM terminal AL • Open or short circuit in wiring from PCM terminal 1N to TCM terminal O • Open or short circuit in wiring ignition switch to TCM terminal AR • Open circuit in wiring from TCM terminal AP to ground

STEP	INSPECTION		ACTION
1	Has FREEZE FRAME PID DATA been recorded?	Yes	Go to next step.
		No	Record FREEZE FRAME PID DATA on repair order, then go to next step.
2	Does TCM connector or PCM connector have poor connection?	Yes	Repair or replace connector, then go to step 7.
		No	Go to next step.
3	TCM terminal AR and AP voltage okay?	Yes	Go to next step.
		No	Repair or replace wiring harness, then go to step 7.
4	Is there continuity between PCM terminal 1K and TCM terminal AL?	Yes	Go to next step.
		No	Repair or replace wiring harness, then go to step 7.
5	Is there continuity between PCM terminal 1N and TCM terminal O?	Yes	Go to next step.
		No	Repair or replace wiring harness, then go to step 7.

STEP	INSPECTION		ACTION
6	Clear diagnostic trouble code from memory. Is same code No. present after rechecking.	Yes	Get assistance from technical Hotline/your distributor, then replace PCM if necessary.
		No	Check TCM, then go to next step.
7	Clear diagnostic trouble code from memory. Is there any diagnostic trouble code present after performing "After Repair Procedure"?	Yes	Go to applicable DTC inspection.
		No	Troubleshooting completed.

DTC P1608, P1609	
DETECTION CONDITION	• PCM does not read diagnostic trouble codes from output devices
POSSIBLE CAUSE	• PCM malfunction

STEP	INSPECTION	ACTION
—	—	Get assistance from Technical Hotline/your distributor, then replace PCM if necessary.

DTC P1631	Generator output voltage signal no electricity
DETECTION CONDITION	• When PCM demands generated current above 20 A to generator, PCM judges generator output voltage below 8.5 V
POSSIBLE CAUSE	• Generator malfunction • Open or short circuit in wiring from generator to PCM terminal 1T • Open or short circuit in wiring from generator to PCM terminal 1O

STEP	INSPECTION		ACTION
1	Does generator connector or PCM connector have poor connection?	Yes	Go to next step.
		No	Repair or replace connector, then go to step 8.
2	Is generator generating current when engine is running? ☞ 01–17 GENERATOR INSPECTION	Yes	Go to next step.
		No	Go to step 5.
3	Implement PID/DATA MONITOR AND RECORD (ALTT V) of DIAGNOSTIC DATA LINK by using NGS tester. Is voltage as specified?	Yes	Go to step 6.
		No	Go to next step.
4	Disconnect generator connector. Is there continuity between connector terminal P and PCM terminal 1T?	Yes	Check generator, then go to step 8. ☞ 01–17 GENERATOR INSPECTION
		No	Repair or replace connector, then go to step 8.
5	Implement PID/DATA MONITOR AND RECORD (ALT F) of DIAGNOSTIC DATA LINK by using NGS tester. Is voltage as specified?	Yes	Go to next step.
		No	Go to step 7.
6	Is there continuity between connector terminal D and PCM terminal 1O?	Yes	Check generator, then go to step 8. ☞ 01–17 GENERATOR INSPECTION
		No	Repair or replace connector, then go to step 9
7	Clear diagnostic trouble code from memory. Is same code No. present after performing "After Repair Procedure"?	Yes	Get assistance from Technical Hotline/your distributor, then replace PCM if necessary.
		No	Intermittent poor connection in harness or connector. Repair connector and/or harness, then go to next step.
8	Clear diagnostic trouble code from memory. Is there any diagnostic trouble code present after performing "After Repair Procedure"?	Yes	Go to applicable DTC inspection.
		No	Troubleshooting completed.

DTC P1632	Battery voltage monitor signal circuit malfunction
DETECTION CONDITION	• When PCM judges battery positive voltage below 8 V
POSSIBLE CAUSE	• Open or short circuit in wiring from battery to PCM terminal 1H

STEP	INSPECTION		ACTION
1	Does PCM connector have poor connection?	Yes	Repair or replace connector, then go to step 4.
		No	Go to next step.
2	Implement PID/DATA MONITOR AND RECORD (B+) of DIAGNOSTIC DATA LINK by using NGS tester. Is voltage as specified?	Yes	Go to next step.
		No	Check continuity between battery and PCM, then go to step 4.
3	Clear diagnostic trouble code from memory. Is same code No. present after performing "After Repair Procedure"?	Yes	Get assistance from Technical Hotline/your distributor, then replace PCM if necessary.
		No	Intermittent poor connection in harness or connector. Repair connector and/or harness, then go to next step.
4	Clear diagnostic trouble code from memory. Is there any diagnostic trouble code present after performing "After Repair Procedure"?	Yes	Go to applicable DTC inspection.
		No	Troubleshooting completed.

DTC P1633	Battery overcharge
DETECTION CONDITION	When PCM judges generator output voltage above 18 V or battery positive voltage above 16 V
POSSIBLE CAUSE	• Generator malfunction (overcharge) • PCM malfunction • Open or short circuit in wiring from generator to PCM terminal 1B

STEP	INSPECTION		ACTION
1	Does generator connector or PCM connector have poor connection?	Yes	Go to next step.
		No	Repair or replace connector, then go to step 6.
2	Is generator generating current when engine is running? ☞ 01–17 GENERATOR INSPECTION	Yes	Check generator, then go to step 6. ☞ 01–17 GENERATOR INSPECTION
		No	Go to next step.
3	Disconnect generator connector. Is generator connector terminal D voltage okay? **Ignition switch ON: Approx. 0 V**	Yes	Go to step 5.
		No	Go to next step.
4	Implement PID/DATA MONITOR AND RECORD (B+) of DIAGNOSTIC DATA LINK by using NGS tester. Is voltage as specified?	Yes	Go to next step.
		No	Repair or replace wiring harness between generator side connector terminal D and PCM terminal 4R, then go to step 6.
5	Clear diagnostic trouble code from memory. Is same code No. present after performing "After Repair Procedure"?	Yes	Get assistance from Technical Hotline/your distributor, then replace PCM if necessary.
		No	Intermittent poor connection in harness or connector. Repair connector and/or harness, then go to next step.
6	Clear diagnostic trouble code from memory. Is there any diagnostic trouble code present after performing "After Repair Procedure"?	Yes	Go to applicable DTC inspection.
		No	Troubleshooting completed.

DTC P1634	Generator terminal B circuit open
DETECTION CONDITION	• Generator output voltage is above 17 V and battery voltage is below 11 V while idling
POSSIBLE CAUSE	• Generator malfunction • Battery malfunction • Open or short circuit in wiring from battery to generator

STEP	INSPECTION		ACTION
1	Does generator terminal B connector have poor connection?	Yes	Go to next step.
		No	Repair or replace connector, then go to step 6.
2	Is battery positive voltage normal when battery is fully charged? ☞ 01–17 BATTERY INSPECTION	Yes	Go to next step.
		No	Check battery, then go to step 6. ☞ 01–17 BATTERY INSPECTION
3	Disconnect generator terminal B connector. Is harness side connector voltage okay? **Voltage: B+**	Yes	Go to next step.
		No	Repair or replace wiring harness between generator terminal B and battery positive terminal, then go to step 6.
4	Is generator terminal B voltage normal at idle? **Voltage 13—15 V**	Yes	Go to next step.
		No	Check generator, then go to step 6. ☞ 01–17 GENERATOR INSPECTION
5	Clear diagnostic trouble code from memory. Is same code No. present after performing "After Repair Procedure"?	Yes	Get assistance from Technical Hotline/your distributor, then replace PCM if necessary.
		No	Intermittent poor connection in harness or connector. Repair connector and/or harness, then go to next step.
6	Clear diagnostic trouble code from memory. Is there any diagnostic trouble code present after performing "After Repair Procedure"?	Yes	Go to applicable DTC inspection.
		No	Troubleshooting completed.

ENGINE SYMPTOM TROUBLESHOOTING

X5U101W03

Diagnostic Index

TROUBLESHOOTING ITEM			DESCRIPTION
No.	TROUBLE		
1	Melts main or other fuse		—
2	Will not crank		Starter does not work
3	Hard start/long crank/erratic start/erratic crank		Starter cranks engine at normal speed but engine requires excessive cranking
4	Engine stalls	After start At idle	Engine stops unexpectedly at idle and/or after start
5	Cranks normally but will not start		Starter cranks engine at normal speed but engine will not run
6	Slow return to idle		Engine takes more time than normal to return to idle speed
7	Engine runs rough/rolling idle		Engine speed fluctuates between specified idle speed and lower speed and excessive engine shake Idle speed too slow and excessive engine shake
8	Fast idle/runs on		Engine speed continues at fast idle after warm-up Engine runs after ignition switch is turned off
9	Low idle/stalls during deceleration		Engine stops unexpectedly at beginning of deceleration or recovery from deceleration
10	Engine stalls/quits	Acceleration/cruise	Engine stops unexpectedly at beginning of acceleration or during acceleration Engine stops unexpectedly while cruising
	Engine runs rough	Acceleration/cruise	Engine speed fluctuates during acceleration or cruising
	Misses	Acceleration/cruise	Engine misses during acceleration or cruising
	Buck/jerk	Acceleration/cruise deceleration	Vehicle bucks/jerks during acceleration, cruising, or deceleration
	Hesitation/stumble	Acceleration	Momentary pause at beginning of acceleration, or during acceleration
	Surges	Acceleration/cruise	Momentary minor irregularity in engine output
11	Lack/loss of power	Acceleration/cruise	Performance poor under load (i.e., power down when climbing hills)
12	Knocking/pinging	Acceleration/cruise	Sound produced when air/fuel mixture is ignited by something other than spark plug (i.e., hot spot in combustion chamber)
13	Poor fuel economy		Fuel economy unsatisfactory
14	Emissions compliance		Fails emissions test
15	MIL never on		Malfunction indicator lamp never on
16	High oil consumption/leakage		Oil consumption excessive
17	Cooling system concerns	Overheating	Engine runs at higher than normal temperature/overheats
18	Cooling system concerns	Runs cold	Engine does not reach normal operating temperature
19	Exhaust smoke		Blue, black, or white smoke from exhaust system
20	Fuel odor (in engine compartment)		Gasoline fuel smell or visible leaks
21	Engine noise		Engine noise from under hood
22	Vibration concerns (engine)		Vibration from under hood or driveline
23	A/C does not work		A/C compressor magnetic clutch does not engage when A/C is turned on
24	A/C always on/A/C compressor runs continuously		A/C compressor magnetic clutch does not disengage
25	A/C does not cut off under wide open throttle conditions		A/C compressor magnetic clutch does not disengage under wide open throttle
26	Exhaust sulphur smell		Rotten egg smell (sulphur) from exhaust
27	Intermittent concerns		Symptom occurs randomly and is difficult to diagnose

TROUBLESHOOTING ITEM			DESCRIPTION
No.	TROUBLE		
28	Automatic transmission concerns	Upshift downshift/engagement	☞ 05–01 AUTOMATIC TRANSMISSION
29	Fuel fill issues		Fuel tank does not fill smoothly
30	Fuel filling shut off issues		Fuel does not shut off properly
31	Constant voltage		Incorrect constant voltage

Quick Diagnostic Chart

	Troubleshooting item / Possible factor		Malfunction of starter motor(Mechanical or electrical)	Starter interlock switch (Open)	Starter circuit including ignition switch open	Improper engine oil level	Low or dead battery	Malfunction of charging system	Cruise control system	Improper engine compression	Improper valve timing	Hydrolocked engine	Improper engine oil viscosity	improper dipstick	Malfunction of base engine	Drive plate or flywheel seized	Improper tension or damaged drive belts	Improper engine coolant level	Water and anti-freeze mixture improperly	Malfunction of cooling system(radiator, hoses, overflow system, thermostat, etc.)	Malfunction of main cooling fan system	Engine or transaxle mounts improperly installed	Add fan and/or main cooling fan seal improperly	Adjustment of accelerator cable free-play	Adjustment of cruise control cable free play	Fuel quality	Engine overheating	Air cleaner element clogged or restriction	Air leaks from intake air system (hoses loose, crack, gaskets broken)	Improper operation of IAC valve	Malfunction of throttle body	Improper operation of VICS	Vacuum leaks (damaged vacuum hose, mis-routing)	Mis-adjustment of initial ignition timing (CKP & crankshaft pulley mis-adjustment)	Malfunction of ignition coil (i.e. open, short or cracks)	Malfunction of spark plug	Malfunction of high-tension leads (cracks, open, low resistance)	Damaged crankshaft position sensor (i.e. Open or short circuits)	Damaged crankshaft pulley	Improper gap between CKP sensor and crankshaft pulley
1	Melts main or other fuse															Not in applicable																									
2	Will not crank		x	x	x		x	x				x				x																									
3	Hard start/long crank/ erratic start/erratic crank																									x		x	x				x			x	x	x	x	x
4	Engine stalls	After start								x	x	x														x	x	x	x	x			x	x	x	x	x	x	x	x
		At idle								x	x	x														x	x	x	x	x			x	x	x	x	x	x	x	x
5	Cranks normally but will not start									x	x	x														x	x		x	x			x	x	x	x	x	x	x	x
6	Slow return to idle																			x											x										
7	Engine runs rough/ rolling idle									x	x															x	x		x	x			x	x		x	x	x	x	x
8	Fast idle/runs on																							x	x																
9	Low idle/ stalls during deceleration																												x	x											
10	Engine stalls/quits	Acceleration/cruise							x	x	x															x	x	x	x		x	x	x			x		x	x	x
	Engine runs rough	Acceleration/cruise																																							
	Misses	Acceleration/cruise																																	x	x	x		x	x
	Buck/jerk	Acceleration/cruise / deceleration																																							
	Hesitation/stumble	Acceleration																																							
	Surges	Acceleration/cruise																																							x
11	Lack/loss of power	Acceleration/cruise								x	x															x	x	x	x			x	x			x		x	x	x
12	Knocking/pinging	Acceleration/cruise								x										x							x													
13	Poor fuel economy									x	x							x		x	x					x		x								x	x			
14	Emission compliance									x	x				x					x								x	x				x			x	x	x		x
15	MIL never on																																								
16	High oil consumption/leakage												x	x	x																										
17	Cooling system	Overheating															x	x	x	x	x																				
18	Cooling system	Runs cold																		x	x																				
19	Exhaust smoke														x					x								x								x	x			
20	Fuel odor (in engine compartment)																																								
21	Engine noise					x									x		x												x				x								
22	Vibration concerns(engine)																x					x	x																		
23	A/C does not work																																								
24	A/C always on/A/C compressor runs continuously																																								
25	A/C does not cut off under wide open throttle conditions																																								
26	Exhaust sulfur smell																									x															
27	Intermittent concerns						x																							x		x	x			x	x	x	x		
28	Automatic transmission concerns	Upshift/downshift/ engagement																																							
29	Fuel refill concerns																																								
30	Fuel filling shut off issues																																								
31	Constant voltage																																								

☞ 05-01 AUTOMATIC TRANSMISSION

X5U10:WEF

Possible factor / Troubleshooting item		Malfunction of fuel pump(Mechanically or electrically)	Malfunction of pressure regulator	Restriction or clogged in fuel hoses	Malfunction of fuel injectors (leak or clogged, imperative)	Fuel leakage from fuel system (including insulator, injector O-ring)	Fuel filters restriction or clogged	Damaged camshaft position sensor (i.e. Open or short circuits)	Damaged camshaft	Improper air/fuel mixture ratio control	Exhaust system restriction or clogged	Malfunction of catalytic converter	Malfunction of EGR system	Malfunction of evaporative emission control system	Malfunction of PCV valve	Malfunction of V-reference supply circuit	Malfunction of main relay (Mechanically or electrically)	Malfunction of engine coolant temperature sensor	Transmission range sensor mis-adjustment	Inhibitor switch in transmission range sensor open	Malfunction of brake on/off switch and related circuit	Malfunction of neutral or clutch switch and related circuit	Malfunction of mass air flow sensor and related circuit	Malfunction of throttle position sensor and related circuit	Mis-adjustment of throttle position sensor (including looseness)	Malfunction of knock sensor and related circuit	Malfunction of power steering pressure switch and related circuit	Improper refrigerant charging amount	Malfunction of A/C demands signal circuit	Malfunction of condenser fan system	Improper load signal input	MIL burned out	Damaged instrument cluster including circuit board	Clutch slippage	Malfunction of automatic transaxle related parts	Malfunction of vehicle speed sensor and related circuit	Improper ATF level	Brake dragging	Loosen parts	Improper balance of wheels & tires	Malfunction of drive line	Malfunction of suspension		
Melts main or other fuse																							Not in applicable																						1
Will not crank																				x	x																									2
Hard start/long crank/ erratic start/erratic crank		x	x	x			x				x	x		x	x	x																													3
Engine stalls	After start	x	x	x	x	x					x	x		x	x	x		x											x																	4
	At idle	x	x	x	x	x					x	x		x	x	x		x											x																	
Cranks normally but will not start		x	x	x	x	x		x			x	x		x	x	x	x	x	x																											5
Slow return to idle																			x												x															6
Engine runs rough/ rolling idle		x	x	x	x		x	x	x	x	x	x		x	x	x				x							x	x		x	x														7
Fast idle/runs on																			x												x														8
Low idle/ stalls during deceleration											x				x							x	x	x	x	x									x	x									9
Engine stalls/quits	Acceleration/cruise	x	x	x	x		x	x	x	x	x	x		x	x	x	x	x						x	x	x			x					x	x										10
Engine runs rough	Acceleration/cruise							x		x																																			
Misses	Acceleration/cruise							x																																					
Buck/jerk	Acceleration/cruise / deceleration																																												
Hesitation/stumble	Acceleration		x								x												x																						
Surges	Acceleration/cruise		x					x			x																																		
Lack/loss of power	Acceleration/cruise	x	x	x	x			x	x			x		x	x	x							x	x				x		x				x	x			x						11
Knocking/pinging	Acceleration/cruise	x	x																								x																	12
Poor fuel economy		x	x	x	x		x	x	x			x				x			x				x	x	x					x								x	x					13
Emission compliance		x	x	x	x		x	x	x	x	x	x	x	x	x	x			x				x	x	x																				14
MIL never on																																x	x											15
High oil consumption/leakage																x																													16
Cooling system concerns	Overheating																											x		x															17
Cooling system concerns	Runs cold																													x															18
Exhaust smoke		x	x	x	x											x																														19
Fuel odor (in engine compartment)			x			x									x																														20
Engine noise																																							x						21
Vibration concerns(engine)																																								x	x	x			22
A/C does not work																													x	x	x														23
A/C always on/A/C compressor runs continuously																														x	x														24
A/C does not cut off under wide open throttle conditions																									x	x																			25
Exhaust sulfur smell															x																														26
Intermittent concerns		x	x		x								x	x	x			x	x	x	x	x	x	x	x		x	x		x						x									27
Automatic transmission concerns	Upshift/downshift/ engagement																																												28
Fuel refill concerns															x																														29
Fuel filling shut off issues															x																														30
Constant voltage																																													31

☞ 05-01 AUTOMATIC TRANSMISSION

X5U10*WEG

Description of Drivability Problems

- STUMBLE: Mildly irregular performance during acceleration.
- HESITATION: A dip or flat spot in performance just after the accelerator pedal is depressed.
- SURGE: Continuous irregular performance during cruising.

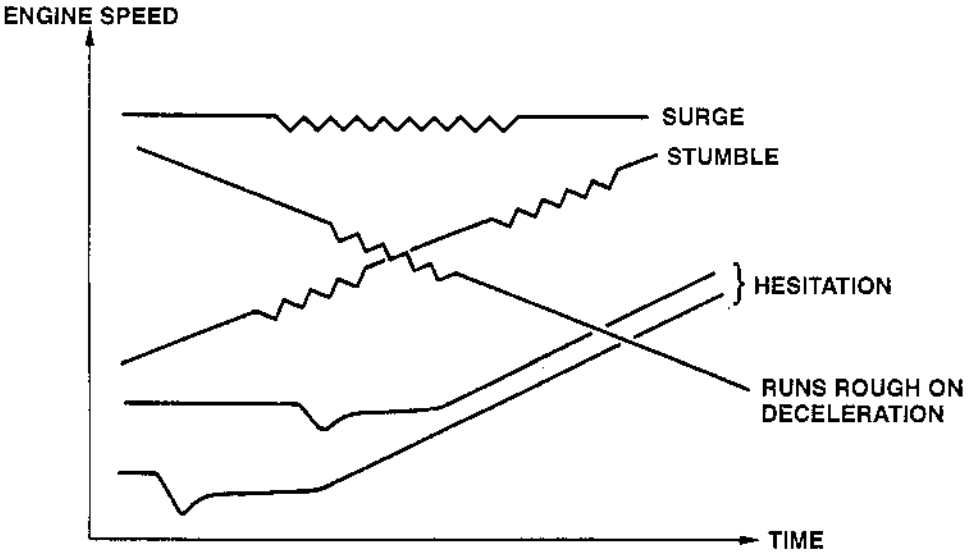

X5U101WA7

Fuel Pressure Release and Servicing Fuel System

Warning

- **Fuel vapor is hazardous. It can easily ignite, causing serious ijury and damage. Always keep sparks and flames away from fuel.**

- Fuel in the fuel system is under high-pressure when the engine is not running.

Warning

- **Fuel line spills and leaks are dangerous. Fuel can ignite and cause serious injuries or death and damage. Fuel can also irritate skin and eyes. To prevent shis, always complete the following "Fuel Line Safety Procedure".**

Fuel Line Safety Procedures

1. Remove the fuel-filler cap and release the pressure in the fuel tank.
2. Disconnect the fuel pump relay connector (6-pin type connector: 4 terminal) located aboive the accelerator pedal.

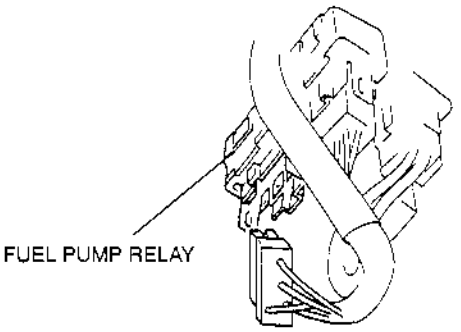

X5U101WA8

3. Start the engine.
4. After the engine stalls, crank the engine several times.
5. Turn the ignition switch off.
6. Install the fuel pump relay.

Symptom Troubleshooting

1	MELTS MAIN OR OTHER FUSE

[TROUBLESHOOTING HINTS]
Inspect the condition of the fuse

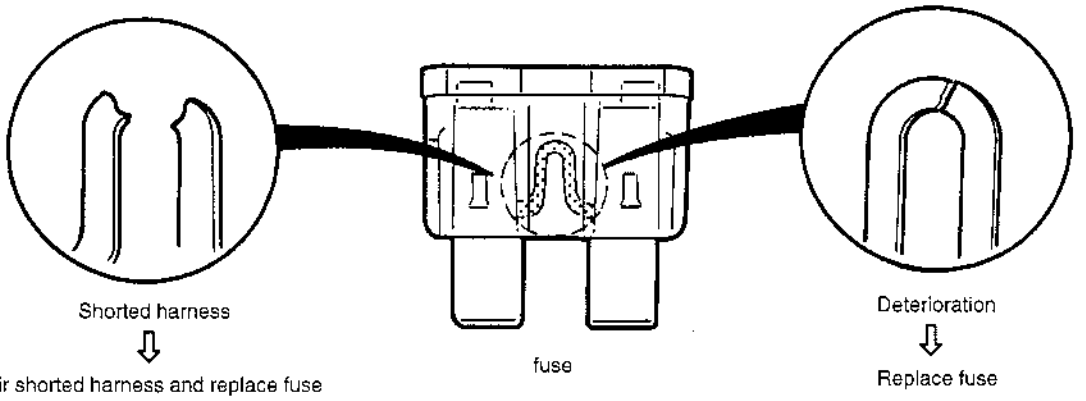

Damaged Fuse	Related Wiring Harness
MAIN (100 A)	**Main fuse** • Condenser fan relay • Cooling fan relay • A/C relay • Heated oxygen sensor • Generator • Ignition switch • TCM • PCM
BTN (40 A)	**BTN fuse** • ROOM fuse
ROOM (15 A)	**ROOM fuse** • PCM
EGI INJ (30 A)	**Main relay** • PCM • Fuel injectors • Camshaft position sensor • EGR Boost sensor solenoid valve • Crankshaft position sensor • EGR valve • IVC valve • Purge solenoid valve • CDCV solenoid valve • Tank pressure control valve • Mass air flow sensor • Fuel pump relay
ENGINE (10 A)	**ENGINE fuse** • Main relay • Fuel pump relay
METER (10 A)	**METER fuse** • Transaxle range switch • TCM

X5U101WA9

2	WILL NOT CRANK
DESCRIPTION	Starter does not work
POSSIBLE CAUSE	• Open starter circuit between ignition switch and starter • Transmission range sensor malfunction (A/T) • Transmission range sensor mis-adjustment (A/T) • Starter interlock switch malfunction (M/T) • Starter malfunction • Seized/hydrolocked engine, flywheel or drive plate

STEP	INSPECTION		ACTION
1	Verify follows: • Battery connection • Transmission in Park or Neutral (A/T) • Clutch fully depressed (M/T) • Fuses Are all items okay?	Yes	Go to next step.
		No	Service as necessary and repeat step 1.
2	Is clicking sound heard from starter when ignition switch is turned to START?	Yes	Go to next step.
		No	Go to step 4.
3	Inspect starting system. Is starting system okay?	Yes	Inspect for seized/hydrolocked engine, flywheel or drive plate. ☞ 01–50 FLYWHEEL INSPECTION
		No	Service as required. ☞ 01–19 STARTER INSPECTION
4	Do any other electrical accessories work?	Yes	Go to next step.
		No	Inspect the charging system. ☞ 01–17 BATTERY INSPECTION ☞ 01–17 GENERATOR INSPECTION
5	**Note** • Following test should be performed on automatic transmissions only. For manual transmissions, go to next step. Connect NGS tester to DLC-2. Access TR SW PID. Turn ignition switch to ON. Is TR SW PID indicated ON when selecting P or N range?	Yes	Go to next step.
		No	Inspect for adjustment of transmission range sensor. If transmission range sensor is adjusted properly, inspect for open circuit between transmission range sensor and PCM terminal V or starter.
6	Connect NGS tester to DLC-2. Turn ignition switch to ON. Retrieve any DTC. Is "SYSTEM PASSED (NO DTCs AVAILABLE)" displayed?	Yes	**No DTC displayed** Inspect following: • START circuit in ignition switch • Open circuit between ignition switch and starter • Starter interlock switch (M/T)
		No	**DTC displayed** Go to appropriate DTC test. **If communication error message is displayed on NGS tester, inspect following:** • Open circuit between main relay and PCM terminal 1B • Open main relay ground circuit • Main relay stuck open • Open or poor ground circuit (PCM terminal 3A, 3B or 3C) • Poor connection of vehicle body ground
7	Verify test results. If okay, return to diagnostic index to service any additional symptoms.		

Note

- If the malfunction remains even though all inspections have been performed, get assistance from technical hotline/your distributors.

3	HARD START/LONG CRANK/ERRATIC START/ERRATIC CRANK
DESCRIPTION	• Starter cranks engine at normal speed but engine requires excessive cranking time before start • Battery in normal condition
POSSIBLE CAUSE	• Spark leakage from high-tension leads • Vacuum leakage • Poor fuel quality • Starting system malfunction • Spark plug malfunction • Air leakage from intake air system • Erratic signal from crankshaft position sensor • Erratic signal from camshaft position sensor • Air cleaner restriction • IAC valve malfunction • PCV valve malfunction • Inadequate fuel pressure • Purge solenoid valve malfunction • Mass air flow sensor contamination • Restriction in exhaust system • EGR valve malfunction **Warning** **The following troubleshooting flow chart contains the fuel system diagnosis and repair procedures. Read the following warnings before performing the fuel system services:** • **Fuel vapor is hazardous. It can easily ignite, causing serious injury and damage. Always keep sparks and flames away from fuel.** • **Fuel line spills and leaks are dangerous. Fuel can ignite and cause serious injuries or death and damage. Fuel can also irritate skin and eyes. To prevent this, always complete "BEFORE REPAIR PROCEDURE" and "AFTER REPAIR PROCEDURE" described in this manual.** **☞ 01–14 BEFORE REPAIR PROCEDURE** **☞ 01–14 AFTER REPAIR PROCEDURE**

STEP	INSPECTION		ACTION
1	Verify following: • Vacuum leakage • Fuel quality (i.e proper octane, contamination, winter/summer blend) • Loose bands on intake air system • Cracks on intake air system parts • Air cleaner restriction Are all items okay?	Yes	Go to next step.
		No	Service as necessary.
2	Connect NGS tester to DLC-2. Turn ignition switch to ON. Retrieve any DTC. Is "SYSTEM PASSED (NO DTCs AVAILABLE)" displayed?	Yes	**No DTC displayed:** Go to next step.
		No	**DTC displayed:** Go to appropriate DTC test.
3	Is engine overheating?	Yes	Go to flowchart 17 for "COOLING SYSTEM CONCERNS OVERHEATING"
		No	Go to next step.
4	Inspect for cracks on high-tension leads. Is there any crack on high-tension leads?	Yes	Repair suspected high-tension lead.
		No	Go to next step.
5	Inspect spark plug conditions. Is spark plug wet, converted with carbon or grayish white?	Yes	If spark plug is wet or converted with carbon, inspect for fuel leakage from fuel injector. If spark plug is grayish white, inspect for clogged fuel injector.
		No	Install spark plugs on original cylinders. Go to next step.
6	Visually inspect crankshaft position (CKP) sensor and teeth of crankshaft pulley. Is CKP sensor and teeth of crankshaft pulley okay?	Yes	Go to next step.
		No	Replace malfunctioning parts.

STEP	INSPECTION		ACTION
7	Measure gap between crank position (CKP) sensor and teeth of crankshaft pulley. **Specification: 0.5—1.5 mm {0.020—0.59 in}** Is gap within specification?	Yes	Go to next step.
		No	Adjust CKP sensor.
8	Remove PCV valve and inspect PCV valve. Does PCV valve rattle?	Yes	Go to next step.
		No	Replace PCV valve.
9	Install fuel gauge between fuel filter and fuel distributor. Connect a jumper wire between F/P terminal at DLC in engine compartment and ground. ☞ 01–14 AFTER REPAIR PROCEDURE Turn ignition switch to ON. Is fuel line pressure correct? **Fuel line pressure:** **370—420 kPa** **{3.7—4.3 kgf/cm², 53—61 psi}**	Yes	Go to next step.
		No	**Zero or low:** • Inspect fuel pump circuit • Inspect for open fuel pump relief valve • Inspect for fuel leakage inside pressure regulator • Inspect for clogged main fuel line • Inspect pulsation damper **High** • Inspect pressure regulator for high pressure cause • Inspect for clogged fuel return line
10	Is fuel line pressure held after ignition switch is turned off? **Fuel line pressure:** **370—420 kPa** **{3.7—4.3 kgf/cm², 53—61 psi}**	Yes	Go to next step.
		No	Inspect pressure regulator diaphragm condition. If condition is okay, inspect fuel injector. If condition is not okay, replace pressure regulator.
11	Disconnect a vacuum hose from purge solenoid valve and plug opening end of vacuum hose. Attempt to start engine. Is starting condition improved?	Yes	Inspect if purge solenoid valve stuck open.
		No	Go to next step.
12	Inspect for contaminated mass air flow sensor. Is there any contamination?	Yes	Replace mass airflow sensor.
		No	Go to next step.
13	Is there restriction in exhaust system?	Yes	Inspect exhaust system.
		No	Go to next step.
14	Inspect engine condition while tapping EGR valve housing. Does engine condition improve?	Yes	Replace EGR valve.
		No	Go to next step.
15	Inspect starting system. ☞ 01–19 STARTER INSPECTION Is starting system normal?	Yes	Inspect for loosen connectors or poor terminal contact. If okay, remove EGR valve and visually inspect for mechanically stuck EGR valve.
		No	Inspect continuity of stepping motor coil.
16	Verify test results. If okay, return to diagnostic index to service any additional symptoms.		

Note

- If the malfunction remains even though all inspections have been performed, get assistance from technical hotline/your distributors.

4	ENGINE STALLS — AFTER START, AT IDLE
DESCRIPTION	Engine stops unexpectedly.
POSSIBLE CAUSE	• A/C system improper operation • Air leakage from intake air system parts • Purge solenoid valve malfunction • Improper operation of IAC valve • EGR valve malfunction • No signal from crankshaft position sensor or camshaft position sensor due to sensor, related wire or wrong installation • Vacuum leakage • Low engine compression • Spark leakage from high-tension leads • Poor fuel quality • PCV valve malfunction • Air cleaner restriction • Restriction in exhaust system • Electrical connector disconnection • Open or short circuit in fuel pump and related harness • No battery power supply to PCM or poor ground • Inadequate fuel pressure • Fuel pump mechanical malfunction • Fuel leakage from fuel injector • Fuel injector clogged **Warning** **The following troubleshooting flow chart contains the fuel system diagnosis and repair procedures. Read the following warnings before performing the fuel system services:** • **Fuel vapor is hazardous. It can easily ignite, causing serious injury and damage. Always keep sparks and flames away from fuel.** • **Fuel line spills and leaks are dangerous. Fuel can ignite and cause serious injuries or death and damage. Fuel can also irritate skin and eyes. To prevent this, always complete "BEFORE REPAIR PROCEDURE" and "AFTER REPAIR PROCEDURE" described in this manual.** **☞ 01–14 BEFORE REPAIR PROCEDURE** **☞ 01–14 AFTER REPAIR PROCEDURE**

STEP	INSPECTION		ACTION
1	Verify following: • Vacuum connection • Air cleaner element • No air leakage from intake air system • No restriction of intake air system • Proper sealing of intake manifold and components attached to intake manifold: (EGR valve, IAC valve) • Ignition wiring • Fuel quality; such as proper octane, contamination, winter/summer blend • lectrical connections • Smooth operation of throttle valve Are all items okay?	Yes	Go to next step.
		No	Service as necessary and repeat step 1.
2	Turn ignition switch to ON. Disconnect throttle position sensor connector. Measure voltage at throttle position sensor connector 2I terminal with ignition switch ON. **Voltage: 4.5—5.5 V** Is voltage okay?	Yes	Go to next step.
		No	Go to troubleshooting No.31 "CONSTANT VOLTAGE".

STEP	INSPECTION		ACTION
3	Connect NGS tester to DLC-2. Turn ignition switch to ON. Retrieve any DTC. Is "SYSTEM PASSED (NO DTCs AVAILABLE)" displayed?	Yes	**No DTC displayed:** Go to next step.
		No	**DTC displayed:** Go to appropriate DTC test. **If communication error message is displayed on NGS tester, inspect follows:** • Open circuit between main relay and PCM terminal 1B • Open main relay ground circuit • Main relay stuck open • Open PCM ground circuit (terminal 3A, 3B or 3C) • Poor connection of vehicle body ground
4	Attempt to start engine at part throttle. Does engine run smoothly at part throttle?	Yes	Inspect IAC valve and wiring harness.
		No	Go to next step.
5	Connect NGS tester to DLC-2. Access RPM PID. Is RPM PID indicating engine speed during cranking of engine?	Yes	Go to next step.
		No	Inspect following: • Open or short circuit in CKP sensor • Open or short circuit between CKP sensor and PCM terminal 2J • Open or short circuit in CKP sensor harnesses If CKP sensor and harness okay, go to next step.
6	Visually inspect crankshaft position (CKP) sensor and teeth of crankshaft pulley Is CKP sensor and teeth of crankshaft pulley okay?	Yes	Go to next step.
		No	Replace malfunctioning parts.
7	Measure gap between crankshaft position (CKP) sensor and teeth of crankshaft pulley. **Specification:** **0.5—1.5 mm {0.020—0.059 in}** Is gap within specifications?	Yes	Go to next step.
		No	Adjust CKP sensor.
8	Inspect for cracks on high-tension leads. Is there any crack on high-tension leads?	Yes	Repair suspected high-tension lead.
		No	Go to next step.
9	Is strong blue spark visible at each disconnected high-tension lead while cranking engine?	Yes	Go to next step. If symptom occurs with A/C on, go to step 15.
		No	Inspect following: • Open or short circuit in ignition coil • Open circuit in high-tension leads • Open circuit between ignition coil connector ground terminal and body ground • Open circuit between ignition switch and ignition coil • Open circuit between ignition coil and PCM terminal 3G or 3H
10	Inspect spark plug conditions. Is spark plug wet, converted with carbon or grayish white?	Yes	If spark plug is wet or converted with carbon, inspect for fuel leakage from injector. If spark plug is grayish white, inspect for clogged fuel injector.
		No	Install spark plugs on original cylinders. Go to next step.
11	Remove and shake PCV valve. Does PCV valve rattle?	Yes	Go to next step.
		No	Replace PCV valve.
12	Is there restriction in the exhaust system? Is there any restriction?	Yes	Inspect exhaust system.
		No	Go to next step.

STEP	INSPECTION		ACTION
13	Install fuel gauge between fuel filter and fuel distributor. Connect a jumper wire between F/P terminal at DLC in engine compartment and ground. Turn ignition switch to ON. Is fuel line pressure correct with ignition switch ON? **Fuel line pressure:** **370—420 kPa** **{3.7—4.3 kgf/cm^2, 53—61 psi}**	Yes	Go to next step
		No	**Zero or low:** • Inspect fuel pump circuit • Inspect for open fuel pump relief valve • Inspect for fuel leakage inside pressure regulator • Inspect for clogged main fuel line • Inspect pulsation damper **High** • Inspect pressure regulator for high pressure cause • Inspect for clogged fuel return line
14	Visually inspect for fuel leakage at fuel injector O-ring and fuel line. Service as necessary. Does fuel line pressure hold after ignition switch is turned off? ☞ 01–14 PRESSURE REGULATOR INSPECTION, Fuel Hold Pressure Inspection	Yes	Go to next step.
		No	Inspect pressure regulator diaphragm condition. If condition is okay, inspect fuel injector. If condition is not okay, replace pressure regulator.
15	**Note** • The following test is for stall concerns with A/C on. If other symptoms exist, go to next step. Connect pressure gauges to A/C low and high pressure side lines. Turn A/C on and measure low side and high side pressure. Are pressures within specifications? ☞ 07–10 REFRIGERANT PRESSURE CHECK	Yes	Go to next step.
		No	If A/C is always on, go to symptom troubleshooting No.24 "A/C always on/ A/C compressor runs continuously". For other symptoms, inspect following: • Refrigerant charging amount • Condenser fan operation
16	Disconnect vacuum hose between purge solenoid valve and intake manifold from purge solenoid side. Plug opening end of vacuum hose. Start engine. Is engine stall now eliminated?	Yes	Inspect if purge solenoid valve stuck open. Inspect evaporative emission control system.
		No	Go to next step.
17	Is air leakage felt or heard at intake air system components while racing engine to higher speed?	Yes	Repair or replace.
		No	Go to next step.
18	Inspect engine condition while tapping EGR valve housing. Does engine condition improve?	Yes	Replace EGR valve.
		No	Go to next step.
19	Is engine compression correct?	Yes	Inspect for valve timing.
		No	Inspect for cause.
20	Verify test results. If okay, return to diagnostic index to service any additional symptoms.		

Note

- If the malfunction remains even though all inspections have been performed, get assistance from technical hotline/your distributors.

5	CRANKS NORMALLY BUT WILL NOT START
DESCRIPTION	• Starter cranks engine at normal speed but engine will not run • Refer to "ENGINE STALLS" if this symptom appears after engine stall • Fuel in tank • Battery in normal condition
POSSIBLE CAUSE	• No battery power supply to PCM • Air leakage from intake air system • Open PCM ground or vehicle body ground • Improper operation of IAC valve • EGR valve malfunction • No signal from crankshaft position sensor or camshaft position sensor due to sensor, related wire or incorrect installation • Low engine compression • Vacuum leakage • Spark leakage from high-tension leads • Poor fuel quality • PCV valve malfunction • Air cleaner restriction • Restriction in exhaust system • Disconnected electrical connector • Open or short circuit in fuel pump and related harness • Inadequate fuel pressure • Fuel pump mechanical malfunction • Fuel leakage from injector • Fuel injector clogged • Purge solenoid valve malfunction **Warning** **The following troubleshooting flow chart contains the fuel system diagnosis and repair procedures. Read the following warnings before performing the fuel system services:** • **Fuel vapor is hazardous. It can easily ignite, causing serious injury and damage. Always keep sparks and flames away from fuel.** • **Fuel line spills and leaks are dangerous. Fuel can ignite and cause serious injuries or death and damage. Fuel can also irritate skin and eyes. To prevent this, always complete "BEFORE REPAIR PROCEDURE" and "AFTER REPAIR PROCEDURE" described in this manual.** **☞ 01–14 BEFORE REPAIR PROCEDURE** **☞ 01–14 AFTER REPAIR PROCEDURE**

STEP	INSPECTION		ACTION
1	Verify following: • Vacuum connection • External fuel shut off or accessory (kill switch, alarm, etc.) • Fuel quality; such as proper octane, contamination, winter/summer blend • No air leakage from intake air system • Proper sealing of intake manifold and components attached to intake manifold: (EGR valve, IAC valve) • Ignition wiring • Electrical connections • Fuses • Smooth operation of throttle valve. Are all items okay?	Yes	Go to next step.
		No	Service as necessary and repeat step 1.
2	Connect NGS tester to DLC-2. Turn ignition switch to ON. Retrieve any DTC. Is "SYSTEM PASSED (NO DTCs AVAILABLE)" displayed?	Yes	**No DTC displayed:** Go to next step.
		No	**DTC displayed:** Go to appropriate DTC test. **If communication error message is displayed on NGS tester, inspect follows:** • Open circuit between main relay and PCM terminal 1B • Open main relay ground circuit • Main relay stuck open • Open PCM ground circuit (PCM terminal 3A, 3B or 3C) • Poor connection of vehicle body ground

STEP	INSPECTION		ACTION
3	Turn ignition switch to ON. Disconnect TP sensor connector. Measure voltage at TP sensor connector 2I terminal with ignition switch ON. **Voltage: 4.5—5.5 V** Is voltage okay?	Yes	Go to next step.
		No	Go to troubleshooting No.31 "CONSTANT VOLTAGE".
4	Does engine start with throttle closed?	Yes	Go to step 20.
		No	Go to next step.
5	Will engine start and run smoothly at part throttle?	Yes	Inspect IAC valve and wiring harness.
		No	Go to next step.
6	Connect NGS tester to DLC-2. Access RPM PID. Is RPM PID indicating engine speed when cranking engine?	Yes	Go to next step.
		No	Inspect following: • Open or short circuit in CKP sensor • Open or short circuit between CKP sensor and PCM terminal 2J • Open or short circuit in CKP sensor harnesses If CKP sensor and harness okay, go to next step.
7	Visually inspect crankshaft position (CKP) sensor and teeth of crankshaft pulley. Is CKP sensor and teeth of crankshaft pulley okay?	Yes	Go to next step.
		No	Replace malfunctioning parts.
8	Measure gap between crankshaft position (CKP) sensor and teeth of crankshaft pulley. **Specification:** **0.5—1.5 mm {0.020—0.059 in}** Is gap within specifications?	Yes	Go to next step.
		No	Adjust CKP sensor.
9	Inspect for cracks on high-tension leads. Is there any crack on high-tension leads?	Yes	Repair suspected high-tension lead.
		No	Go to next step.
10	Is strong blue spark visible at each disconnected high-tension lead while cranking engine?	Yes	Go to next step.
		No	Inspect follows: • Open or short circuit in ignition coil • Open circuit in high-tension leads • Open circuit between ignition coil connector ground terminal and ground • Open circuit between ignition switch and ignition coil • Open circuit between ignition coil and PCM terminal 3G or 3H
11	Inspect spark plug conditions. Is spark plug wet, converted with carbon or grayish white?	Yes	If spark plug is wet or converted with carbon, inspect for fuel leakage from injector. If spark plug is grayish white, inspect for clogged fuel injector.
		No	Install spark plugs on original cylinders. Go to next step.
12	Remove and shake PCV valve. Does PCV valve rattle?	Yes	Go to next step.
		No	Replace PCV valve.
13	Is there any restriction in exhaust system?	Yes	Inspect exhaust system.
		No	Go to next step.
14	Install fuel gauge between fuel filter and fuel distributor. Connect a jumper wire between F/P terminal at DLC in engine compartment and ground. Turn ignition switch to ON. Is fuel line pressure correct when ignition switch is cycled ON/OFF five times? **Fuel line pressure:** **250 kPa {2.55 kgf/cm^2, 36.3 psi}**	Yes	Go to next step.
		No	**Zero or low:** • Inspect fuel pump circuit • Inspect for open fuel pump relief valve • Inspect for fuel leakage inside pressure regulator • Inspect for clogged main fuel line • Inspect pulsation damper **High:** • Inspect pressure regulator for high pressure cause • Inspect for clogged fuel return line

STEP	INSPECTION		ACTION
15	Visually inspect for fuel leakage at fuel injector O-ring, pulsation damper, and fuel line. Service as necessary. Is fuel line pressure held after ignition switch is turned off? ☞ 01–14 PRESSURE REGULATOR INSPECTION, Fuel Hold Pressure Inspection	Yes	Go to next step.
		No	Inspect pressure regulator diaphragm condition. If condition is okay, inspect fuel injector. If condition is not okay, replace pressure regulator.
16	Disconnect vacuum hose between purge solenoid valve and intake manifold from purge solenoid valve side. Plug opening end of vacuum hose. Attempt to start engine. Is starting condition improved?	Yes	Inspect if purge solenoid valve stuck open mechanically. Inspect evaporative emission control system.
		No	Go to next step.
17	Is air leakage felt or heard at intake air system components while racing engine to higher speed?	Yes	Repair or replace.
		No	Go to next step.
18	Inspect engine condition while tapping EGR valve housing. Does engine condition improve?	Yes	Replace EGR valve.
		No	Go to next step.
19	Is engine compression correct?	Yes	Inspect valve timing.
		No	Inspect for causes.
20	Verify test results. If okay, return to diagnostic index to service any additional symptoms.		

Note

- If the malfunction remains even though all inspections have been performed, get assistance from technical hotline/your distributors.

6	SLOW RETURN TO IDLE
DESCRIPTION	Engine takes more time than normal to return to idle speed
POSSIBLE CAUSE	• Malfunction of engine coolant temperature sensor • Thermostat stuck open • Throttle body malfunction • Air leakage from intake air system

STEP	INSPECTION		ACTION
1	Connect NGS tester to DLC-2. Turn ignition switch to ON. Retrieve any DTC. Is "SYSTEM PASSED (NO DTCs AVAILABLE)" displayed?	Yes	**No DTC displayed:** Go to next step.
		No	**DTC displayed:** Go to appropriate DTC test.
2	Remove thermostat and inspect operation. ☞ 01–12 THERMOSTAT REMOVAL/INSTALLATION ☞ 01–12 THERMOSTAT INSPECTION Is thermostat okay?	Yes	Engine coolant temperature and thermostat are okay. Go to next step.
		No	Access ECT V PID on NGS tester. Inspect for both ECT V and temperature gauge on instrument cluster readings. If temperature gauge on instrument cluster indicates normal range but ECT V is not same as temperature gauge reading, inspect engine coolant temperature sensor. If temperature gauge on instrument cluster indicates cold range but ECT V is normal, inspsect temperature gauge and heat gauge unit.
3	Is throttle body free of contaminations?	Yes	Inspect for air leakage from intake air system components while racing engine to higher speed.
		No	Clean or replace throttle body.
4	Verify test results. If okay, return to diagnostic index to service any additional symptoms.		

Note

- If the malfunction remains even though all inspections have been performed, get assistance from technical hotline/your distributors.

7	ENGINE RUNS ROUGH/ROLLING IDLE
DESCRIPTION	• Engine speed fluctuates between specified idle speed and lower speed and excessive engine shake • Idle speed is too slow and excessive engine shake
POSSIBLE CAUSE	• Air leakage from intake air system parts • A/C system improper operation • Spark leakage from high-tension leads • Purge solenoid valve malfunction • Improper operation of IAC valve • EGR valve malfunction • Erratic or no signal from camshaft position sensor • Low engine compression • Erratic signal from crankshaft position sensor • Poor fuel quality • PCV valve malfunction • Air cleaner restriction • Restriction in exhaust system • Disconnected electrical connectors • Inadequate fuel pressure • Fuel pump mechanical malfunction • Fuel leakage from fuel injector • Fuel injector clogged • Engine overheating • Vacuum leakage **Warning** **The following troubleshooting flow chart contains the fuel system diagnosis and repair procedures. Read the following warnings before performing the fuel system services:** • **Fuel vapor is hazardous. It can easily ignite, causing serious injury and damage. Always keep sparks and flames away from fuel.** • **Fuel line spills and leaks are dangerous. Fuel can ignite and cause serious injuries or death and damage. Fuel can also irritate skin and eyes. To prevent this, always complete "BEFORE REPAIR PROCEDURE" and "AFTER REPAIR PROCEDURE" described in this manual.** **☞ 01–14 BEFORE REPAIR PROCEDURE** **☞ 01–14 AFTER REPAIR PROCEDURE**

STEP	INSPECTION		ACTION
1	Verify following: • External fuel shut off or accessory (kill switch, alarm etc.) • Fuel quality; such as proper octane, contamination, winter/summer blend • No air leakage from intake air system • Proper sealing of intake manifold and components attached to intake manifold; such as EGR control valve, IAC solenoid • Ignition wiring • Electrical connections • Fuses • Smooth operation of throttle valve Are all items okay?	Yes	Go to next step.
		No	Service as necessary and repeat step 1.
2	Connect NGS tester to DLC-2. Turn ignition switch to ON. Retrieve any DTC. Is "SYSTEM PASSED (NO DTCs AVAILABLE)" displayed?	Yes	**No DTC displayed:** Go to next step.
		No	**DTC displayed:** Go to appropriate DTC test.
3	Is engine overheating?	Yes	Go to symptom troubleshooting No.17 "COOLING SYSTEM CONCERNS OVERHEATING".
		No	Go to next step.

STEP	INSPECTION		ACTION
4	**Note** • Following test is for engine running rough idle with A/C ON concerns. If other symptoms exist, go to next step. Connect pressure gauge to A/C low and high pressure side lines. Start engine and run it at idle. Turn A/C switch on. Measure low side and high side pressures. Are reading pressures within specification? ☞ 07–10 REFRIGERANT PRESSURE CHECK	Yes	Go to next step.
		No	If A/C is always on, go to symptom troubleshooting No.24 "A/C always ON/ A/C compressor runs continuously." For other symptoms, inspect following: • Refrigerant charging amount • Condenser fan operation
5	**Note** • Following test is for engine running rough with P/S ON. If other symptoms exist, go to next step. Start engine and run it at idle. Access PSP SW PID. Inspect if PSP PID is on while turning steering wheel right to left. Is PSP SW PID okay?	Yes	Inspect power steering pressure switch operation and wiring harness between power steering pressure switch connector and PCM connector terminal 1G.
		No	Go to next step.
6	Visually inspect crankshaft position (CKP) sensor and teeth of crankshaft pulley. Is CKP sensor and teeth of crankshaft pulley okay?	Yes	Go to next step.
		No	Replace malfunctioning parts.
7	Measure gap between crankshaft position (CKP) sensor and teeth of crankshaft pulley. **Specification:** **0.5—1.5 mm {0.020—0.059 in}** Is gap within specifications?	Yes	Go to next step.
		No	Adjust CKP sensor.
8	Inspect for cracks on high-tension leads. Is there any crack on high-tension leads?	Yes	Repair suspected high-tension lead.
		No	Go to next step.
9	Inspect spark plug conditions. Is spark plug wet, converted with carbon or grayish white?	Yes	If spark plug is wet or converted with carbon, inspect for fuel leakage from injector. If spark plug is grayish white, inspect for clogged fuel injector.
		No	Install spark plugs on original cylinders. Go to next step.
10	Start engine and disconnect IAC valve connector. Does rpm drop or engine stall?	Yes	Go to next step.
		No	Inspect IAC valve and wiring harness.
11	Install fuel pressure gauge between fuel filter and fuel distributor. Start engine and run it at idle. Measure fuel line pressure at idle. Is fuel line pressure correct at idle? **Fuel line pressure:** **370—420 kPa** **{3.7—4.3 kgf/cm^2, 53—61 psi}**	Yes	Go to next step.
		No	**Zero or low:** • Inspect fuel pump circuit • Inspect for open fuel pump relief valve • Inspect for fuel leakage inside pressure regulator • Inspect for clogged main fuel line • Inspect pulsation damper **High:** • Inspect pressure regulator for high pressure cause • Inspect for clogged fuel return line
12	Visually inspect for fuel leakage at fuel injector O-ring, pulsation damper, and fuel line. Service as necessary. Does fuel line pressure hold after ignition switch turned off? ☞ 01–14 PRESSURE REGULATOR INSPECTION, Fuel Hold Pressure Inspection	Yes	Go to next step.
		No	Inspect pressure regulator diaphragm condition. If condition is okay, inspect fuel injector. If condition is not okay, replace pressure regulator.

STEP	INSPECTION		ACTION
13	Connect NGS tester to DLC-2. Start the engine and run it at idle. Access LONGFT1 PID. Measure LONGFT1 PID at idle. Is PID value between –15% and +15%?	Yes	Go to next step.
		No	LONGFT1 PID is out of specification. **Less than specification (too rich):** Inspect evaporative emission control system. If system is okay, go to step 15. **Greater than specification (too lean):** Inspect for air leakage at intake air system components. If system is okay, go to next step.
14	Disconnect vacuum hose between purge solenoid valve and intake manifold from purge solenoid valve side. Plug opening end of vacuum hose. Start engine. Does engine condition improve?	Yes	inspect if purge solenoid valve stuck open mechanically. Inspect evaporative emission control system.
		No	Go to next step.
15	Remove and shake PCV valve. Does PCV valve rattle?	Yes	Go to next step.
		No	Replace PCV valve.
16	Is there restriction in exhaust system?	Yes	Inspect exhaust system.
		No	Go to next step.
17	Visually inspect camshaft position (CMP) sensor and tooth of camshaft. Is CMP sensor and tooth of camshaft okay?	Yes	Go to next step.
		No	Replace malfunctioning parts.
18	Inspect engine condition while tapping EGR valve housing. Does engine condition improve?	Yes	Replace EGR valve.
		No	Go to next step.
19	Is engine compression correct?	Yes	Inspect valve timing.
		No	Inspect for causes.
20	Verify test results. If okay, return to diagnostic index to service any additional symptoms.		

Note

- If the malfunction remains even though all inspections have been performed, get assistance from technical hotline/your distributors.

8	FAST IDLE/RUNS ON
DESCRIPTION	• Engine speed continues at fast idle after warm-up • Engine runs after ignition switch is turned off
POSSIBLE CAUSE	• Engine coolant temperature malfunction • Air leakage from intake air system • Throttle body malfunction • Mis-adjustment of accelerator cable free play • Mis-adjustment of cruise control cable

STEP	INSPECTION		ACTION
1	Connect NGS tester to DLC-2. Access ECT PID. Start and warm-up engine to normal operating temperature. Is ECT PID reading between 112 °C {233.6 °F} and 82 °C {179.6 °F}?	Yes	Go to next step.
		No	If ECT PID is higher than 112 °C {233.6 °F}: Go to symptom troubleshooting No.17 "COOLING SYSTEM CONCERNS OVERHEATING". If ECT PID is less than 82 °C {179.6 °F}: Go to symptom troubleshooting No.18 "COOLING SYSTEM CONCERNS RUNS COLD".
2	Connect NGS tester to DLC-2. Turn ignition switch to ON. Retrieve any DTC. Is "SYSTEM PASSED (NO DTCs AVAILABLE)" displayed?	Yes	**No DTC displayed:** Go to next step.
		No	**DTC displayed:** Go to appropriate DTC test.
3	Is there air leakage felt or heard at intake air system components while racing engine to higher speed?	Yes	Repair or replace parts as necessary.
		No	Verify accelerator control cable free play. Inspect VICS. ☞ 01–13 ACCELERATOR CABLE INSPECTION/ADJUSTMENT
4	Verify test results. If okay, return to diagnostic index to service any additional symptoms.		

Note

- If the malfunction remains even though all inspections have been performed, get assistance from technical hotline/your distributors.

9	LOW IDLE/STALLS DURING DECELERATION
DESCRIPTION	Engine stops unexpectedly at beginning of deceleration or recovery from deceleration
POSSIBLE CAUSE	• Vacuum leakage • IAC valve malfunction • Air leakage from intake air system • Throttle position sensor or related circuit malfunction • Mass-airflow sensor or related circuit malfunction • Brake on/off switch or related circuit malfunction • Clutch position and/or neutral position switch or related circuit malfunction

STEP	INSPECTION		ACTION
1	Does engine idle rough?	Yes	Go to flow chart 7 for "Engine runs rough/Rolling idle".
		No	Go to next step.
2	Inspect following: • Proper routing and no damage of vacuum lines • IAC valve properly connected • No air leakage from intake air system Are all items okay?	Yes	Go to next step.
		No	Service as necessary. Repeat step 2.
3	Connect NGS tester to DLC-2. Turn ignition switch to ON. Retrieve any DTC. Is "SYSTEM PASSED (NO DTCs AVAILABLE)" displayed?	Yes	**No DTC displayed:** Go to next step.
		No	**DTC displayed:** Go to appropriate DTC test.
4	Does idle speed drop or stall when disconnecting IAC valve?	Yes	Go to next step.
		No	Inspect following: • Circuit from idle air control valve to PCM connector terminal 3M or 3O for open and short • IAC valve stuck If okay, go to next step.
5	Disconnect vacuum hose between purge solenoid valve and intake manifold from purge solenoid valve side. Plug opening end of vacuum hose. Drive vehicle. Does engine condition improve?	Yes	Inspect evaporative emission control system.
		No	Go to next step.
6	Connect NGS tester to DLC-2. Access TP V PID, MAF V PID, VS PID, BRK SW PID, TR SW PID (A/T), NL SW PID (M/T) and CLT SW (M/T). Monitor each PIDs while driving vehicle. ☞ 01–40 PID/DATA MONITOR INSPECTION Are PIDs okay?	Yes	Go to flow chart 27for "Intermittent concerns".
		No	TP V PID: Inspect for throttle position sensor. MAF V PID: Inspect for mass air flow sensor. VS PID: Inspect vehicle speed sensor. BRK SW PID: Inspect brake switch. TR SW PID: Inspect TR switch. NL SW PID: Inspect neutral switch. CLT SW PID: Inspect clutch switch.
7	Verify test results. If okay, return to diagnostic index to service any additional symptoms		

Note

- If the malfunction remains even though all inspections have been performed, get assistance from technical hotline/your distributors.

10	**ENGINE STALLS/QUITS — ACCELARATION/CRUISE** **ENGINE RUNS ROUGH — ACCELARATION/CRUISE** **MISSES — ACCELERATION/CRUISE** **BUCK/JERK — ACCELERATION/CRUISE/DECELERATION** **HESITATION/STUMBLE — ACCELERATION** **SURGES — ACCELERATION/CRUISE**
DESCRIPTION	• Engine stops unexpectedly at beginning of acceleration or during acceleration • Engine stops unexpectedly while cruising • Engine speed fluctuates during acceleration or cruising • Engine misses during acceleration or cruising • Vehicle bucks/jerks during acceleration, cruising or deceleration • Momentary pause at beginning of acceleration or during acceleration • Momentary minor irregularity in engine output
POSSIBLE CAUSE	• A/C system improper operation • Erratic signal or no signal from camshaft position sensor • Air leakage from intake air system parts • Purge solenoid valve malfunction • Improper operation of IAC valve • EGR valve malfunction • Erratic signal from crankshaft position sensor • Low engine compression • Vacuum leakage • Poor fuel quality • Spark leakage from high-tension leads • Air cleaner restriction • PCV valve malfunction • Improper valve timing due to jumping out timing belt • Restriction in exhaust system • Intermittent open or short in fuel pump circuit • Inadequate fuel pressure • Fuel pump mechanical malfunction • Fuel leakage from fuel injector • Fuel injector clogged • Intermittent open or short of mass airflow sensor, throttle sensor and vehicle speed sensor • Automatic transmission malfunction • Clutch slippage • Improper VICS operation **Warning** **The following troubleshooting flow chart contains the fuel system diagnosis and repair procedures. Read the following warnings before performing the fuel system services:** • **Fuel vapor is hazardous. It can easily ignite, causing serious injury and damage. Always keep sparks and flames away from fuel.** • **Fuel line spills and leaks are dangerous. Fuel can ignite and cause serious injuries or death and damage. Fuel can also irritate skin and eyes. To prevent this, always complete "BEFORE REPAIR PROCEDURE" and "AFTER REPAIR PROCEDURE" described in this manual.** **☞ 01–14 BEFORE REPAIR PROCEDURE** **☞ 01–14 AFTER REPAIR PROCEDURE**

STEP	INSPECTION		ACTION
1	Verify following: • Vacuum connection • Air cleaner element • No air leakage from intake air system • No restriction of intake air system • Proper sealing of intake manifold and components attached to intake manifold: (EGR valve, IAC valve) • Ignition wiring • Fuel quality: Proper octane, contamination, winter/summer blend • Electrical connections • Smooth operation of throttle valve Are all items okay?	Yes	Go to next step.
		No	Service as necessary and repeat step 1.
2	Connect NGS tester to DLC-2. Turn ignition switch to ON. Retrieve any DTC. Is "SYSTEM PASSED (NO DTCs AVAILABLE)" displayed?	Yes	**No DTC displayed:** Go to next step.
		No	**DTC displayed:** Go to appropriate DTC test.

STEP	INSPECTION		ACTION
3	Is engine overheating?	Yes	Go to symptom troubleshooting No.17 "COOLING SYSTEM CONCERNS OVERHEATING".
		No	Go to next step.
4	Connect NGS tester to DLC-2. Access RPM PID, B+ PID, MAF V PID, TP V PID, and VS PID. Drive vehicle with monitoring PIDs. Are PIDs within specification? ☞ 01–40 PID/DATA MONITOR INSPECTION	Yes	Go to next step.
		No	RPM PID: Inspect crankshaft position (CKP) sensor and related harness; such as vibration, intermittent open/short circuit. B+ PID: Inspect for open circuit intermittently. MAF V PID: Inspect for open circuit of mass air flow sensor and related wire harness intermittently. TP V PID: Inspect if output signal from throttle position sensor changes smoothly. VS PID: Inspect for open circuit of vehicle speed sensor and related wire harness intermittently.
5	Visually inspect crankshaft position (CKP) sensor and teeth of crankshaft pulley. Is CKP sensor and teeth of crankshaft pulley okay?	Yes	Go to next step.
		No	Replace malfunctioning parts.
6	Measure gap between crankshaft position (CKP) sensor and teeth of crankshaft pulley. **Specification:** **0.5—1.5 mm {0.020—0.059 in}** Is gap within specifications?	Yes	Go to next step.
		No	Adjust CKP sensor.
7	Inspect spark plug conditions. Is spark plug wet, converted with carbon or grayish white?	Yes	If spark plug is wet or converted with carbon, inspect for fuel leakage from fuel injector. If spark plug is grayish white, inspect for clogged fuel injector.
		No	Install spark plugs on original cylinders. Go to next step.
8	Remove and shake PCV valve. Does PCV valve rattle?	Yes	Go to next step.
		No	Replace PCV valve.
9	Verify that throttle lever is resting on throttle valve stop screw and/or throttle valve orifice plug. Is lever in correct position?	Yes	Go to next step.
		No	Adjust as necessary.
10	Are there restrictions in the exhaust system?	Yes	Inspect exhaust system.
		No	Go to next step.
11	Install fuel gauge between fuel filter and fuel distributor. Connect a jumper wire between F/P terminal at DLC in engine compartment and ground. Turn ignition switch to ON. Is fuel line pressure correct with ignition switch at ON? **Fuel line pressure:** **370—420 kPa** **{3.7—4.3 kgf/cm^2, 53—61 psi}**	Yes	Go to next step.
		No	**Zero or low:** • Inspect fuel pump circuit • Inspect for open fuel pump relief valve • Inspect for fuel leakage inside pressure regulator • Inspect for clogged main fuel line • Inspect pulsation damper **High:** • Inspect pressure regulator for high pressure cause • Inspect for clogged fuel return line
12	Visually inspect for fuel leakage at fuel injector O-ring, pulsation damper, and fuel line. Service as necessary. Does fuel line pressure hold after ignition switch is turned off? ☞ 01–14 PRESSURE REGULATOR INSPECTION, Fuel Hold Pressure Inspection	Yes	Go to next step.
		No	Inspect pressure regulator diaphragm condition. If condition is okay, inspect fuel injector. If condition is not okay, replace pressure regulator.

STEP	INSPECTION		ACTION
13	**Note** • The following test is for engine stalling with A/C on. If other symptom exists, go to next step. Connect a pressure gauge to A/C low and high pressure side lines. Turn A/C on and measure low side and high side pressure. Are pressures within specifications? ☞ 07–10 REFRIGERANT PRESSUER CHECK	Yes	Go to next step.
		No	If A/C is always on, go to symptom troubleshooting No.24 "A/C always on/ A/C compressor runs continuously". For other symptoms, inspect follows: • Refrigerant charging amount • Condenser fan operation
14	**Note** • The following test is performed for symptom with cruise control ON. If other symptoms exist, go to next step. Inspect cruise control system. Is cruise control system okay?	Yes	Go to next step.
		No	Repair or replace.
15	Disconnect vacuum hose between purge solenoid valve and intake manifold from purge solenoid valve side. Plug opening end of vacuum hose. Drive vehicle. Does engine condition improve?	Yes	Inspect if purge solenoid valve stuck open mechanically. Inspect evaporative emission control system.
		No	Go to next step.
16	Visually inspect camshaft position (CMP) sensor and tooth of camshaft. Is CMP sensor and tooth of camshaft okay?	Yes	Go to next step.
		No	Replace malfunctioning parts.
17	Inspect VICS operation. ☞ 01–01A ENGINE SYSTEM INSPECTION, VICS Operation Inspection Is VICS okay?	Yes	Go to next step.
		No	Repair or replace malfunctioning parts.
18	Inspect EGR system. ☞ 01–01A ENGINE SYSTEM INSPECTION, EGR Control Inspection Is EGR system okay?	Yes	Go to next step.
		No	Replace malfunctioning parts.
19	Is engine compression correct?	Yes	Inspect following: • Valve timing • Internal transmission part (A/T only) • Clutch (M/T only)
		No	Inspect for cause.
20	Verify test results. If okay, return to diagnostic index to service any additional symptoms.		

Note

- If the malfunction remains even though all inspections have been performed, get assistance from technical hotline/your distributors.

11	LACK/LOSS OF POWER — ACCELERATION/CRUISE
DESCRIPTION	Performance is poor under load (i.e., power down when climbing hills)
POSSIBLE CAUSE	• Improper A/C system operation • Erratic signal or no signal from camshaft position sensor • Air leakage from intake air system parts • Purge control solenoid malfunction • EGR valve malfunction • Brake dragging • Erratic signal from crankshaft position sensor • Low engine compression • Vacuum leakage • Poor fuel quality • Spark leakage from high-tension leads • Air cleaner restriction • PCV valve malfunction • Improper valve timing due to jumping out timing belt • Restriction in exhaust system • Intermittent open or short in fuel pump circuit • Inadequate fuel pressure • Fuel pump mechanical malfunction • Fuel leakage from fuel injector • Fuel injector clogged • Intermittent open or short of mass airflow sensor, throttle position sensor and vehicle speed sensor • Automatic transmission malfunction • Clutch slippage • Improper VICS operation **Warning** **The following troubleshooting flow chart contains the fuel system diagnosis and repair procedures. Read the following warnings before performing the fuel system services:** • **Fuel vapor is hazardous. It can easily ignite, causing serious injury and damage. Always keep sparks and flames away from fuel.** • **Fuel line spills and leaks are dangerous. Fuel can ignite and cause serious injuries or death and damage. Fuel can also irritate skin and eyes. To prevent this, always complete "BEFORE REPAIR PROCEDURE" and "AFTER REPAIR PROCEDURE" described in this manual.** **☞ 01–14 BEFORE REPAIR PROCEDURE** **☞ 01–14 AFTER REPAIR PROCEDURE**

STEP	INSPECTION		ACTION
1	Verify following: • Vacuum connection • Air cleaner element • No air leakage from intake air system • No restriction of intake air system • Proper sealing of intake manifold and components attached to intake manifold: (EGR valve, IAC valve) • Fuel quality: Proper octane, contamination, winter/summer blend Are all items okay?	Yes	Go to next step.
		No	Service as necessary and repeat step 1.
2	Connect NGS tester to DLC-2. Turn ignition switch to ON. Retrieve any DTC. Is "SYSTEM PASSED (NO DTCs AVAILABLE)" displayed?	Yes	**No DTC displayed:** Go to next step.
		No	**DTC displayed:** Go to appropriate DTC test.
3	Is engine overheating?	Yes	Go to symptom troubleshooting No.17 "COOLING SYSTEM CONCERNS OVERHEATING".
		No	Go to next step.

STEP	INSPECTION		ACTION
4	Connect NGS tester to DLC-2. Access RPM PID, MAF V PID, TP V PID, and VS PID. Drive vehicle with monitoring PIDs. Are PIDs within specification? ☞ 01–40 PID/DATA MONITOR INSPECTION	Yes	Go to next step.
		No	RPM PID: Inspect CKP sensor and related harness for vibration and/or intermittent open/short circuit. MAF V PID: Inspect for intermittent open circuit of mass air flow sensor and related wire harness. TP V PID: Inspect if throttle position sensor output increases smoothly. VS PID: Inspect for intermittent open circuit of vehicle speed sensor and related wire harness.
5	Visually inspect crankshaft position (CKP) sensor and teeth of crankshaft pulley. Is CKP sensor and teeth of crankshaft pulley okay?	Yes	Go to next step.
		No	Replace malfunctioning parts.
6	Measure gap between crankshaft position (CKP) sensor and teeth of crankshaft pulley. **Specification:** **0.5—1.5 mm {0.020—0.059 in}** Is the gap within specifications?	Yes	Go to next step.
		No	Adjust CKP sensor.
7	Inspect spark plug conditions. Is spark plug wet, converted with carbon or grayish white?	Yes	If spark plug is wet or converted with carbon, inspect for fuel leakage from fuel injector. If spark plug is grayish white, inspect for clogged fuel injector.
		No	Install spark plugs on original cylinders. Go to next step.
8	Remove and shake PCV valve. Does PCV valve rattle?	Yes	Go to next step.
		No	Replace PCV valve.
9	Are there restriction in exhaust system?	Yes	Inspect exhaust system.
		No	Go to next step.
10	Install fuel gauge between fuel filter and fuel distributor. Connect a jumper wire between F/P terminal at DLC in engine compartment and ground. Turn ignition switch to ON. Is fuel line pressure correct with ignition switch at ON? **Fuel line pressure:** **370—420 kPa** **{3.7—4.3 kgf/cm^2, 53—61 psi}**	Yes	Go to next step.
		No	**Zero or low:** • Inspect fuel pump circuit • Inspect for open fuel pump relief valve • Inspect for fuel leakage inside pressure regulator • Inspect for clogged main fuel line • Inspect pulsation damper **High:** • Inspect pressure regulator for high pressure cause • Inspect for clogged fuel return line
11	**Note** • Following test is for engine stalling with A/C on concern. If other symptom exists, go to next step. Connect pressure gauge to A/C low and high side pressure lines. Turn A/C on and measure low side and high side pressure. Are the pressures within specifications? ☞ 07–10 REFRIGERANT PRESSURE CHECK	Yes	Go to next step.
		No	If A/C is always on, go to symptom troubleshooting No.24 "A/C always on/ A/C compressor runs continuously". For other symptoms, inspect following: • Refrigerant charging amount • Condenser fan operation
12	Inspect for A/C cut off operation. ☞ 01–01A ENGINE SYSTEM INSPECTION, A/C Cut Control Inspection Does A/C cut-off work properly?	Yes	Go to next step.
		No	Inspect A/C cut off system components.

STEP	INSPECTION		ACTION
13	Disconnect vacuum hose between purge solenoid valve and intake manifold from purge solenoid valve side. Plug opening end of vacuum hose. Drive vehicle. Does engine condition improve?	Yes	Inspect if purge solenoid valve sticks open mechanically. Inspect evaporative emission control system.
		No	Go to next step.
14	Verify VICS operation. ☞ 01–01A ENGINE SYSTEM INSPECTION, VICS Operation Inspection Is VICS operation okay?	Yes	Go to next step.
		No	Repair or replace malfunctioning parts.
15	Visually inspect camshaft position (CMP) sensor and tooth of camshaft. Is CMP sensor and tooth of camshaft okay?	Yes	Go to next step.
		No	Replace malfunctioning part.
16	Inspect EGR system. ☞ 01–01A ENGINE SYSTEM INSPECTION, EGR Control Inspection Is EGR system okay?	Yes	Go to next step.
		No	Replace malfunctioning parts.
17	Is engine compression correct?	Yes	Inspect following: • Valve timing • Internal transmission components (A/T only) • Clutch (M/T only) • Brake system for dragging
		No	Inspect for cause.
18	Verify test results. If okay, return to diagnostic index to service any additional symptoms.		

Note

- If the malfunction remains even though all inspections have been performed, get assistance from technical hotline/your distributors.

12	KNOCKING/PINGING — ACCELERATION/CRUISE
DESCRIPTION	Sound is produced when air/fuel mixture is ignited by something other than spark plug (hot spot in combustion chamber)
POSSIBLE CAUSE	• Engine overheating due to cooling system malfunction • Engine coolant temperature sensor malfunction • Intake-air temperature sensor malfunction • Inadequate engine compression • Inadequate fuel pressure • Knock sensor and related circuit malfunction Warning **The following troubleshooting flow chart contains the fuel system diagnosis and repair procedures. Read the following warnings before performing the fuel system services:** • **Fuel vapor is hazardous. It can easily ignite, causing serious injury and damage. Always keep sparks and flames away from fuel.** • **Fuel line spills and leaks are dangerous. Fuel can ignite and cause serious injuries or death and damage. Fuel can also irritate skin and eyes. To prevent this, always complete "BEFORE REPAIR PROCEDURE" and "AFTER REPAIR PROCEDURE" described in this manual.** **☞ 01–14 BEFORE REPAIR PROCEDURE** **☞ 01–14 AFTER REPAIR PROCEDURE**

STEP	INSPECTION		ACTION
1	Connect NGS tester to DLC-2. Access ECT PID. Verify ECT PID is less than 116 °C {240.8 °F} during driving. Is ECT PID less than specification?	Yes	Go to next step.
		No	Inspect cooling system for cause of overheating.
2	Connect NGS tester to DLC-2. Turn ignition switch to ON. Retrieve any DTC. Is "SYSTEM PASSED (NO DTCs AVAILABLE)" displayed?	Yes	**No DTC displayed:** Go to next step.
		No	**DTC displayed:** Go to appropriate DTC test.
3	Is engine compression correct?	Yes	Go to next step.
		No	Inspect for cause.
4	Install fuel pressure gauge between fuel filter and fuel distributor. Start engine and run it at idle. Measure fuel line pressure at idle. Is fuel line pressure correct at idle? **Fuel line pressure:** **370—420 kPa** **{3.7—4.3 kgf/cm^2, 53—61 psi}**	Yes	Go to next step.
		No	**Zero or low:** • Inspect fuel pump circuit • Inspect for open fuel pump relief valve • Inspect for fuel leakage inside pressure regulator • Inspect for clogged main fuel line • Inspect pulsation damper **High:** • Inspect pressure regulator for high pressure cause • Inspect for clogged fuel return line
5	Measure resistance between knock sensor terminal and knock sensor body. **Specification: Approx. 560 kΩ (20 °C {68 °F})** Is resistance okay?	Yes	Inspect ignition timing.
		No	Replace knock sensor.
6	Verify test results. If okay, return to diagnostic index to service any additional symptoms.		

Note

- If the malfunction remains even though all inspections have been performed, get assistance from technical hotline/your distributors.

13	POOR FUEL ECONOMY
DESCRIPTION	Fuel economy unsatisfactory
POSSIBLE CAUSE	• Contaminated air cleaner element • Engine cooling system malfunction • Improper transmission fluid level • Weak spark • Poor fuel quality • Erratic or no signal from camshaft position sensor • Improper coolant level • Inadequate fuel pressure • Spark plug malfunction • PCV valve malfunction • Brake dragging • Improper valve timing due to timing belt skip out • Contaminated mass airflow sensor • Improper engine compression • Exhaust system clogged **Warning** **The following troubleshooting flow chart contains the fuel system diagnosis and repair procedures. Read the following warnings before performing the fuel system services:** • **Fuel vapor is hazardous. It can easily ignite, causing serious injury and damage. Always keep sparks and flames away from fuel.** • **Fuel line spills and leaks are dangerous. Fuel can ignite and cause serious injuries or death and damage. Fuel can also irritate skin and eyes. To prevent this, always complete "BEFORE REPAIR PROCEDURE" and "AFTER REPAIR PROCEDURE" described in this manual.** **☞ 01–14 BEFORE REPAIR PROCEDURE** **☞ 01–14 AFTER REPAIR PROCEDURE**

STEP	INSPECTION		ACTION
1	Inspect following: • Contaminated air cleaner element • Transmission fluid level • Fuel quality • Coolant level Are all items okay?	Yes	Go to next step.
		No	Service as necessary. Repeat step 1.
2	Connect NGS tester to DLC-2. Turn ignition switch to ON. Retrieve any DTC. Is "SYSTEM PASSED (NO DTCs AVAILABLE)" displayed?	Yes	**No DTC displayed:** Go to next step.
		No	**DTC displayed:** Go to appropriate DTC test.
3	Connect NGS tester to DLC-2. Access ECT PID. Drive vehicle while monitoring PID. ☞ 01–40 PID/DATA MONITOR INSPECTION Is PID within specification?	Yes	Go to next step.
		No	Inspect for coolant leakage, cooling fan and condenser fan operations or thermostat operation.
4	Is strong blue spark visible at each disconnected high-tension lead while cranking engine?	Yes	Inspect follows: • Spark plugs malfunction • CMP sensor improperly installed • Trigger wheel damage on camshaft • Open or short circuit on CMP sensor • Open or short circuit between CMP sensor and PCM terminal 2H or 3C Repair or replace malfunctioning part. If okay, go to next step
		No	Inspect follows: • High-tension leads • Ignition coil and connector

STEP	INSPECTION		ACTION
5	Install fuel pressure gauge between fuel filter and fuel distributor. Start engine and run it at idle. Measure fuel line pressure at idle. Is fuel line pressure correct at idle? **Fuel line pressure:** **370—420 kPa** **{3.7—4.3 kgf/cm², 53—61 psi}**	Yes	Go to next step.
		No	**Zero or low:** • Inspect fuel pump circuit • Inspect for open fuel pump relief valve • Inspect for fuel leakage inside pressure regulator • Inspect for clogged main fuel line • Inspect pulsation damper **High:** • Inspect pressure regulator for high pressure cause • Inspect for clogged fuel return line
6	Remove and shake PCV valve. Does PCV valve rattle?	Yes	Go to next step.
		No	Replace PCV valve.
7	Is there restriction in exhaust system?	Yes	Inspect exhaust system.
		No	Go to next step.
8	Is brake system functioning properly?	Yes	Go to next step.
		No	Inspect for cause.
9	Inspect for contaminated mass air flow sensor. Is there any contamination?	Yes	Replace mass air flow sensor.
		No	Go to next step.
10	Is engine compression correct?	Yes	Inspect for valve timing.
		No	Inspect for cause.
11	Verify test results. If okay, return to diagnostic index to service any additional symptoms.		

Note

- If the malfunction remains even though all inspections have been performed, get assistance from technical hotline/your distributors.

14	EMISSION COMPLIANCE
DESCRIPTION	Emission compliance test is failed
POSSIBLE CAUSE	• Vacuum lines leakage or blockage • Cooling system malfunction • Spark plug malfunction • Leakage from intake manifold • Erratic or no signal from camshaft position sensor • Inadequate fuel pressure • PCV valve malfunction or incorrect valve installation • EGR valve malfunction • Exhaust system clogged • Fuel tank ventilation system malfunction • Charcoal canister damage • Excessive carbon build up in combustion chamber • Improper engine compression • Improper valve timing **Warning** **The following troubleshooting flow chart contains the fuel system diagnosis and repair procedures. Read the following warnings before performing the fuel system services:** • **Fuel vapor is hazardous. It can easily ignite, causing serious injury and damage. Always keep sparks and flames away from fuel.** • **Fuel line spills and leaks are dangerous. Fuel can ignite and cause serious injuries or death and damage. Fuel can also irritate skin and eyes. To prevent this, always complete "BEFORE REPAIR PROCEDURE" and "AFTER REPAIR PROCEDURE" described in this manual.** **☞ 01–14 BEFORE REPAIR PROCEDURE** **☞ 01–14 AFTER REPAIR PROCEDURE**

STEP	INSPECTION		ACTION
1	Inspect following: • Vacuum lines for leakage or blockage • Electrical connections • Proper maintenance schedule followed • Intake air system and air cleaner element concerns: obstructions, leakage or dirtiness. Are all items okay?	Yes	Go to next step.
		No	Service as necessary. Repeat step 1.
2	Connect NGS tester to DLC-2. Turn ignition switch to ON. Retrieve any DTC. Is "SYSTEM PASSED (NO DTCs AVAILABLE)" displayed?	Yes	**No DTC displayed:** Go to next step.
		No	**DTC displayed:** Go to appropriate DTC test.
3	Is any other drivability concern present?	Yes	Go to appropriate flow chart.
		No	Go to next step.
4	Connect NGS tester to DLC-2. Access ECT PID. Warm-up engine and run it at idle. Verify ECT PID is correct. ☞ 01–40 PID/DATA MONITOR INSPECTION Is ECT PID correct?	Yes	Go to next step.
		No	Inspect for coolant leakage, cooling fan and condenser fan operation or thermostat operation.
5	Is strong blue spark visible at each disconnected high-tension lead while cranking engine?	Yes	Inspect following: • Spark plugs malfunction • CMP sensor improperly installed. • Damage of trigger wheel on camshaft • Open or short circuit on CMP sensor • Open or short circuit between CMP sensor and PCM terminal 2H or 3C Repair or replace malfunctioning parts. If okay, go to next step.
		No	Inspect following: • High-tension leads • Ignition coil and connector
6	Install fuel pressure gauge between fuel filter and fuel distributor. Start engine and run it at idle. Measure fuel line pressure at idle. Is fuel line pressure correct at idle? **Fuel line pressure:** **370—420 kPa** **{3.7—4.3 kgf/cm^2, 53—61 psi}**	Yes	Go to next step.
		No	**Zero or low:** • Inspect fuel pump circuit • Inspect for open fuel pump relief valve • Inspect for fuel leakage inside pressure regulator • Inspect for clogged main fuel line • Inspect pulsation damper **High:** • Inspect pressure regulator for high pressure cause • Inspect for clogged fuel return line
7	Remove and shake PCV valve. Does PCV valve rattle?	Yes	Go to next step.
		No	Replace PCV valve.
8	Inspect for fuel saturation inside charcoal canister. Is excess amount of liquid fuel present in canister?	Yes	Replace charcoal canister.
		No	Inspect fuel tank vent system. Then, go to next step.
9	Is there a restriction in the exhaust system?	Yes	Inspect exhaust system.
		No	Inspect EGR system. ☞ 01–01A ENGINE SYSTEM INSPECTION, EGR Control Inspection
10	Verify test results. If okay, return to diagnostic index to service any additional symptoms.		

Note

- If the malfunction remains even though all inspections have been performed, get assistance from technical hotline/your distributors.

15	MIL NEVER ON
DESCRIPTION	Malfunction indicator light never on
POSSIBLE CAUSE	• MIL burned out • Open or short to power between MIL and PCM • Blown fuse • Open on instrument cluster

STEP	INSPECTION		ACTION
1	Is ROOM fuse burnt?	Yes	Repair wiring harness and replace fuse.
		No	Go to next step.
2	Connect NGS tester to DLC-2. Access MIL PID. Turn ignition switch to ON. Does MIL PID read ON?	Yes	Go to next step.
		No	Inspect for open circuit between PCM and battery or ground.
3	Is there correct voltage at MIL fuse? **Specification: More than 10.5 V**	Yes	Go to next step.
		No	Repair open in wiring harness between fuse block and ignition switch.
4	Remove MIL bulb. Is voltage correct on positive side of MIL bulb socket? **Specification: More than 10.5 V**	Yes	Go to next step.
		No	Repair open circuit in wiring harness between fuse block and MIL bulb socket.
5	Apply 12 volts and ground to MIL bulb. Does MIL illuminate?	Yes	Inspect for open circuit between MIL and PCM terminal E.
		No	Replace MIL bulb.

Note

- If the malfunction remains even though all inspections have been performed, get assistance from technical hotline/your distributors.

16	HIGH OIL CONSUMPTION/LEAKAGE
DESCRIPTION	Oil consumption excessive
POSSIBLE CAUSE	• PCV valve malfunction • Improper dipstick • Improper engine oil viscosity • Engine internal part malfunction

STEP	INSPECTION		ACTION
1	Remove and shake PCV valve. Does PCV valve rattle?	Yes	Go to next step.
		No	Replace PCV valve.
2	Verify following: • External leakage • Proper dipstick • Proper engine oil viscosity Are all items okay?	Yes	Inspect internal engine parts such as valves, valve guides, valve stem seals, cylinder head drain passage, piston rings.
		No	Service as necessary. Repeat step 2.

Note

- If the malfunction remains even though all inspections have been performed, get assistance from technical hotline/your distributors.

17	COOLING SYSTEM OVERHEATING
DESCRIPTION	Engine runs at higher than normal temperature/Overheats
POSSIBLE CAUSE	• Improper coolant level • Blown fuses • Coolant leakage • Excessive A/C system pressure • Improper water/anti-freeze mixture • Fans reverse rotation • Poor radiator condition • Thermostat malfunction • Radiator hoses damage • Condenser fan inoperative • Improper or damaged radiator cap • Main cooling fan inoperative • Malfunction of coolant overflow system • Improper tension of drive belt • Drive belt damage

STEP	INSPECTION		ACTION
1	Inspect following: • Engine coolant level • Coolant leakage • Water and anti-freeze mixture • Radiator condition • Collapsed or restricted radiator hoses • Radiator pressure cap • Overflow system • Fan rotational direction • Fuses Are all items okay?	Yes	Go to next step.
		No	Service as necessary. Repeat step 1.
2	Connect NGS tester to DLC-2. Turn ignition switch to ON. Retrieve any DTC. Is "SYSTEM PASSED (NO DTCs AVAILABLE)" displayed?	Yes	**No DTC displayed:** Go to next step.
		No	**DTC displayed:** Go to appropriate DTC test.
3	Start engine and run it at idle speed. Turn A/C switch on. Does A/C compressor engage?	Yes	Go to step 5.
		No	Inspect following and repair or replace as necessary: • Refrigerant charging amount • Open circuit between A/C magnet clutch relay and PCM terminal 1S • Seized A/C magnet clutch • A/C magnet clutch malfunction If all items are okay, go to next step.
4	Connect NGS tester to DLC-2. Access AC S/W PID on NGS tester. Start engine and run it at idle speed. Turn A/C switch on. Does AC S/W PID read on?	Yes	Go to next step.
		No	Inspect follows: • A/C pressure switch operation • A/C switch stuck open • Open or short circuit between A/C pressure switch and PCM terminal 1P • Open circuit of blower motor fan switch and resistor (if blower motor does not operate) • Evaporator temperature sensor and amplifier

STEP	INSPECTION		ACTION
5	Start engine and run it at idle speed. Turn A/C switch on. Do condenser fan and main cooling fan operate?	Yes	Go to next step.
		No	**If condenser fan does not operate, inspect following:** • Condenser fan relay stuck open • Condenser fan motor malfunction • Condenser fan motor ground open • Open circuit between condenser fan motor and relay • Open circuit between condenser fan relay and PCM terminal 1I • Open battery power circuit for condenser fan relay **If main cooling fan motor does not operate, inspect following:** • Main cooling fan relay stuck open • Main cooling fan motor malfunction • Main cooling fan motor ground open • Open circuit between cooling fan motor and relay • Open circuit between cooling fan relay and PCM terminal 1R • Open battery power circuit for cooing fan relay
6	Is drive belt okay?	Yes	Go to next step.
		No	Replace drive belt.
7	Is there any leakage around heater unit in passenger compartment?	Yes	Inspect and service heater for leakage.
		No	Go to next step.
8	Is there any leakage at coolant hoses and/or radiator?	Yes	Replace malfunctioning parts.
		No	Go to next step.
9	Cool down the engine. Remove thermostat and inspect operation. ☞ 01–12 THERMOSTAT REMOVAL/INSTALLATION ☞ 01–12 THERMOSTAT INSPECTION Is thermostat okay?	Yes	Engine coolant temperature and thermostat are okay, inspect engine block for leakage or blockage.
		No	Access ECT V PID on NGS tester. Inspect for both ECT V and temperature gauge readings. If temperature gauge on instrument cluster indicates normal range but ECT V is not same as temperature gauge reading, inspect engine coolant temperature sensor. If temperature gauge on instrument cluster indicates overheating but ECT V is normal, inspect temperature gauge and heat gauge unit.
10	Verify test results. If okay, return to diagnostic index to service any additional symptoms.		

Note

- If the malfunction remains even though all inspections have been performed, get assistance from technical hotline/your distributors.

18	COOLING SYSTEM RUNS COLD		
DESCRIPTION	Engine takes excessive period for reaching normal operating temperature		
POSSIBLE CAUSE	• Thermostat malfunction • Malfunction of condenser fan system • Malfunction of main cooling fan system		
STEP	INSPECTION		ACTION
1	Is customer complaint "Lack of passenger compartment heat" only?	Yes	Inspect A/C and heater system.
		No	Go to next step.
2	Does engine speed continue at fast idle?	Yes	Go to symptom troubleshooting No.8 "FAST IDLE/RUNS ON".
		No	Go to next step.
3	Remove thermostat and inspect operation. ☞ 01–12 THERMOSTAT REMOVAL/INSTALLATION ☞ 01–12 THERMOSTAT INSPECTION Is thermostat okay?	Yes	Inspect condenser fan and main fan operation. If both or either fan operate abnormally, inspect follows: • Main cooling fan relay stuck closed • Condenser fan relay stuck closed • Short to ground between main cooling fan relay and PCM terminal 1R • Short to ground between condenser fan relay and PCM terminal 1I • Circuit between main cooling fan relay and fan motor shorts to battery supply line • Circuit between condenser fan relay and fan motor shorts to battery supply line
		No	Access ECT V PID on NGS tester. Inspect for both ECT V and temperature gauge on instrument cluster readings. If temperature gauge on instrument cluster indicates normal range but ECT V is not same as temperature gauge reading, inspect engine coolant temperature sensor. If temperature gauge on instrument cluster indicates cold range but ECT voltage is normal, inspect temperature gauge and heat gauge unit.
4	Verify test results. If okay, return to diagnostic index to service any additional symptoms.		

Note

- If the malfunction remains even though all inspections have been performed, get assistance from technical hotline/your distributors.

19	EXHAUST SMOKE
DESCRIPTION	Blue, black, or white smoke from exhaust system
POSSIBLE CAUSE	**Blue smoke (Burning oil):** • PCV valve malfunction • Engine internal oil leakage **White smoke (Water in combustion):** • Malfunction of cooling system (coolant loss) • Engine internal coolant leakage **Black smoke (Rich fuel mixture):** • Air cleaner restricted • Intake air system collapsed or restricted • Fuel return line restricted • Excessive fuel pressure • Improper engine compression • Injector fuel leakage • Ignition system malfunction **Warning** **The following troubleshooting flow chart contains the fuel system diagnosis and repair procedures. Read the following warnings before performing the fuel system services:** • **Fuel vapor is hazardous. It can easily ignite, causing serious injury and damage. Always keep sparks and flames away from fuel.** • **Fuel line spills and leaks are dangerous. Fuel can ignite and cause serious injuries or death and damage. Fuel can also irritate skin and eyes. To prevent this, always complete "BEFORE REPAIR PROCEDURE" and "AFTER REPAIR PROCEDURE" described in this manual.** **☞ 01–14 BEFORE REPAIR PROCEDURE** **☞ 01–14 AFTER REPAIR PROCEDURE**

STEP	INSPECTION		ACTION
1	What color is smoke coming from exhaust system?	Blue	Burning oil is indicated. Go to next step.
		White	Water in combustion is indicated. Go to step 3.
		Black	Rich fuel mixture is indicated. Go to step 4.
2	Remove and shake PCV valve. Does PCV valve rattle?	Yes	Inspect following: • Damaged valve guide, stems or valve seals • Blocked oil drain passage in cylinder head • Piston rings for not seated, seized or worn • Damaged cylinder bore If other drivability symptoms are present, return to diagnostic index to service any additional symptoms.
		No	Replace PCV valve.
3	Does cooling system hold pressure?	Yes	Inspect following: • Cylinder head gasket leakage • Intake manifold gasket leakage • Engine block cracked or porous If other drivability symptoms are present, return to diagnostic index to service any additional symptoms.
		No	Inspect for cause.
4	Inspect following: • Air cleaner for restriction • Collapsed or restricted intake air system • Restricted fuel return line Are all items okay?	Yes	Go to next step.
		No	Service as necessary. Repeat step 5.
5	Connect NGS tester to DLC-2. Turn ignition switch to ON. Retrieve any DTC. Is "SYSTEM PASSED (NO DTCs AVAILABLE)" displayed?	Yes	**No DTC displayed:** Go to next step.
		No	**DTC displayed:** Go to appropriate DTC test.

STEP	INSPECTION		ACTION
6	Install fuel pressure gauge between fuel filter and fuel distributor. Start engine and run it at idle. Measure fuel line pressure at idle. Is fuel line pressure correct at idle? **Fuel line pressure:** **370—420 kPa** **{3.7—4.3 kgf/cm^2, 53—61 psi}**	Yes	Go to next step.
		No	**Zero or low:** • Inspect fuel pump circuit • Inspect for open fuel pump relief valve • Inspect for fuel leakage inside pressure regulator • Inspect for clogged main fuel line • Inspect pulsation damper **High:** • Inspect pressure regulator for high pressure cause • Inspect for clogged fuel return line
7	Is strong blue spark visible at each disconnected high-tension lead while cranking engine?	Yes	Inspect spark plugs and camshaft position sensor.
		No	Inspect following: • High-tension leads • Ignition coil and connector
8	Verify test results. If okay, return to diagnostic index to service any additional symptoms.		

Note

- If the malfunction remains even though all inspections have been performed, get assistance from technical hotline/your distributors.

20	FUEL ODOR (IN ENGINE COMPARTMENT)
DESCRIPTION	Gasoline fuel smell or visible leakage
POSSIBLE CAUSE	• Excessive fuel pressure • Purge control solenoid malfunction • Fuel tank vent system blockage • Charcoal canister malfunction **Warning** **The following troubleshooting flow chart contains the fuel system diagnosis and repair procedures. Read the following warnings before performing the fuel system services:** • **Fuel vapor is hazardous. It can easily ignite, causing serious injury and damage. Always keep sparks and flames away from fuel.** • **Fuel line spills and leaks are dangerous. Fuel can ignite and cause serious injuries or death and damage. Fuel can also irritate skin and eyes. To prevent this, always complete "BEFORE REPAIR PROCEDURE" and "AFTER REPAIR PROCEDURE" described in this manual.** **☞ 01–14 BEFORE REPAIR PROCEDURE** **☞ 01–14 AFTER REPAIR PROCEDURE**

STEP	INSPECTION		ACTION
1	Visually inspect for fuel leakage at fuel injector O-ring, pulsation damper and fuel line. Service as necessary. Is fuel line pressure held after ignition switch is turned off? ☞ 01–14 PRESSURE REGULATOR INSPECTION, Fuel Hold Pressure Inspection	Yes	Go to next step.
		No	Inspect pressure regulator diaphragm condition. If condition is okay, inspect fuel injector. If condition is not okay, replace pressure regulator.
2	Inspect for blockage/restriction or open between engine vacuum port and charcoal canister. Inspect for blockage in fuel tank vent system. Is fault indicated?	Yes	Replace vacuum hose.
		No	Go to next step.
3	Inspect purge solenoid valve. ☞ 01–14 PURGE SOLENOID VALVE INSPECTION Is solenoid operating properly?	Yes	Go to next step.
		No	Replace purge solenoid valve.

STEP	INSPECTION		ACTION
4	Connect NGS tester to DLC-2. Turn ignition switch to ON. Retrieve any DTC. Is "SYSTEM PASSED (NO DTCs AVAILABLE)" displayed?	Yes	**No DTC displayed:** Inspect charcoal canister for fuel saturation. If excess amount of liquid fuel present, replace charcoal canister.
		No	**DTC displayed:** Go to appropriate DTC test.
5	Verify test results. If okay, return to diagnostic index to service any additional symptoms.		

Note

- If the malfunction remains even though all inspections have been performed, get assistance from technical hotline/your distributors.

21	ENGINE NOISE
DESCRIPTION	Engine noise from under hood
POSSIBLE CAUSE	**Squeal, click or chirp noise:** • Improper engine oil level • Improper drive belt tension **Rattle sound noise:** • Loose parts **Hiss sound noise:** • Vacuum leakage • Loose spark plug • Air leakage from intake air system **Rumble or grind noise:** • Improper drive belt tension **Rap or roar sound noise:** • Exhaust system loose **Other noise:** • Camshaft friction gear noise or HLA noise

STEP	INSPECTION		ACTION
1	Is squeal, click or chirp sound present?	Yes	Inspect engine oil level or drive belts.
		No	Go to next step.
2	Is rumble or grind sound present?	Yes	Inspect drive belt.
		No	Go to next step.
3	Is rattle sound present?	Yes	Inspect location of rattle for loose parts.
		No	Go to next step.
4	Is hiss sound present?	Yes	Inspect following: • Vacuum leakage • Spark plug loose • Intake air system leakage
		No	Go to next step.
5	Is rap or roar sound present?	Yes	Inspect exhaust system for loose parts.
		No	Go to next step.
6	Is knock sound present?	Yes	Go to symptom troubleshooting No.12 "KNOCKING/ PINGING".
		No	If noise comes from engine internal, inspect for friction gear or HLA noise.
7	Verify test results. If okay, return to diagnostic index to service any additional symptoms.		

Note

- If the malfunction remains even though all inspections have been performed, get assistance from technical hotline/your distributors.

22	VIBRATION CONCERNS (ENGINE)		
DESCRIPTION	Vibration from under hood or driveline		
POSSIBLE CAUSE	• Loose attaching bolts or worn parts • Components malfunctioning such as worn parts		
STEP	INSPECTION		ACTION
1	Inspect following components for loose attaching bolts or worn parts: • Cooling fan • Drive belt and pulleys • Engine mounts All items okay?	Yes	Inspect following systems: • Wheels • Transmission • Driveline • Suspension
		No	Readjust or retighten engine mount installation position. Service as necessary for other parts.
2	Verify test results. If okay, return to diagnostic index to service any additional symptoms.		

Note

- If the malfunction remains even though all inspections have been performed, get assistance from technical hotline/your distributors.

23	A/C DOES NOT WORK		
DESCRIPTION	A/C compressor magnetic clutch does not engage when A/C switch is turned on		
POSSIBLE CAUSE	• Improper refrigerant charging amount • Open A/C magnet clutch • Open circuit between A/C relay and A/C magnet clutch • Poor ground of A/C magnet clutch • A/C high pressure switch stuck open • A/C relay stuck open • Seized A/C compressor • Open circuit between A/C switch and PCM through both A/C pressure switch and amplifier		
STEP	INSPECTION		ACTION
1	Connect NGS tester to DLC-2. Turn ignition switch to ON. Retrieve any DTC. Is "SYSTEM PASSED (NO DTCs AVAILABLE)" displayed?	Yes	**No DTC displayed:** Go to next step.
		No	**DTC displayed:** Go to appropriate DTC test.
2	Disconnect A/C compressor connector. Start the engine and turn A/C switch on. Is there correct voltage at terminal of A/C compressor magnet clutch connector? **Specification: More than 10.5 V**	Yes	Inspect for ground condition of magnet clutch on A/C compressor. If ground condition is okay, inspect for open circuit of magnet clutch coil.
		No	Go to next step.
3	Disconnect A/C high pressure switch connector. Connect jumper wires between terminals of A/C high pressure switch connector. Connect NGS tester to DLC-2. Access AC S/W PID on NGS tester. Turn ignition switch to ON. Turn A/C switch on and set blower fan at any speed. Does AC S/W PID read on?	Yes	Inspect A/C high pressure switch operation. Replace malfunctioning switch. If switch is okay, go to next step
		No	Inspect follows: • A/C switch stuck open • Open circuit between A/C pressure switch and PCM terminal 1P • Open circuit of blower motor fan switch and resister (if blower motor does not operate) • Evaporator temperature sensor and amplifier
4	Remove jumper wire from switch connector. Reconnect connector to A/C high pressure switch. Start engine and turn A/C switch on. Verify fan operation. Does fan operate?	Yes	Inspect for stuck open A/C relay. Replace as necessary.
		No	Inspect follows and repair or replace as necessary: • Refrigerant charging amount • A/C compressor seized
5	Verify test results. If okay, return to diagnostic index to service any additional symptoms.		

Note

- If the malfunction remains even though all inspections have been performed, get assistance from technical hotline/your distributors.

24	A/C ALWAYS ON/A/C COMPRESSOR RUNS CONTINUOUSLY
DESCRIPTION	A/C compressor magnetic clutch does not disengage
POSSIBLE CAUSE	• Stuck engagement • A/C relay stuck closed • Short to ground between A/C switch and PCM • Short to ground circuit between A/C relay and PCM • A/C relay to magnet clutch circuit shorts to battery power

STEP	INSPECTION		ACTION
1	Connect NGS tester to DLC-2. Turn ignition switch to ON. Retrieve any DTC. Is "SYSTEM PASSED (NO DTCs AVAILABLE)" displayed?	Yes	**No DTC displayed:** Go to next step.
		No	**DTC displayed:** Go to appropriate DTC test.
2	Start engine and run it at idle. Turn A/C switch on. Remove A/C relay. Does A/C magnet clutch disengage?	Yes	Inspect following: • A/C relay stuck closed • Short to ground circuit between A/C relay and PCM terminal 1S If both items okay, go to next step.
		No	Inspect if circuit between A/C relay and magnet clutch shorts to battery power circuit. If circuit is okay, inspect magnet clutch stuck engagement or clearance.
3	Connect NGS tester to DLC-2. Access AC S/W PID on NGS tester. Start the engine and turn A/C switch on. Read AC S/W PID while disconnecting the high-pressure switch connector. **Note** • AC S/W PID should read OFF when disconnecting connector. If AC S/W PID reading remains ON, short to ground circuit may be present. Does AC S/W PID reading remain on?	Yes	Inspect for short to ground circuit between high-pressure switch and PCM terminal 1P.
		No	Go to next step.
4	Reconnect high-pressure switch connector. Read AC S/W PID while turning off A/C switch. **Note** • AC S/W PID should read OFF when turning the A/C switch off. If AC S/W PID reading remains on, short to ground circuit may be present. Does AC S/W PID reading remain on?	Yes	Inspect for short to ground circuit between high-pressure switch and A/C switch.
		No	Inspect for A/C switch stuck closed.
5	Verify test results. If okay, return to diagnostic index to service any additional symptoms.		

Note

- If the malfunction remains even though all inspections have been performed, get assistance from technical hotline/your distributors.

25	A/C DOES NOT CUT OFF UNDER WIDE OPEN THROTTLE CONDITIONS		
DESCRIPTION	A/C compressor magnetic clutch does not disengage under wide open throttle		
POSSIBLE CAUSE	• Throttle position sensor malfunction • Throttle position sensor mis-adjustment • Throttle position sensor loosely installed		
STEP	INSPECTION		ACTION
1	Does A/C compressor disengage when A/C switch is turned off?	Yes	Go to next step.
		No	Go to symptom troubleshooting No.24 "A/C always on A/C compressor runs continuously".
2	Connect NGS tester to DLC-2. Turn ignition switch to ON. Retrieve any DTC. Is "SYSTEM PASSED (NO DTCs AVAILABLE)" displayed?	Yes	**No DTC displayed:** Inspect throttle position sensor for proper adjustment.
		No	**DTC displayed:** Go to appropriate DTC test.
3	Verify test results. If okay, return to diagnostic index to service any additional symptoms.		

Note

- If the malfunction remains even though all inspections have been performed, get assistance from technical hotline/your distributors.

26	EXHAUST SULPHUR SMELL
DESCRIPTION	Rotten egg smell (sulphur) from exhaust
POSSIBLE CAUSE	• Electrical connectors disconnected or poor connection • Charcoal canister malfunction • Vacuum lines disconnected or improper connection • Improper fuel pressure **Warning** **The following troubleshooting flow chart contains the fuel system diagnosis and repair procedures. Read the following warnings before performing the fuel system services:** • **Fuel vapor is hazardous. It can easily ignite, causing serious injury and damage. Always keep sparks and flames away from fuel.** • **Fuel line spills and leaks are dangerous. Fuel can ignite and cause serious injuries or death and damage. Fuel can also irritate skin and eyes. To prevent this, always complete "BEFORE REPAIR PROCEDURE" and "AFTER REPAIR PROCEDURE" described in this manual.** **☞ 01–14 BEFORE REPAIR PROCEDURE** **☞ 01–14 AFTER REPAIR PROCEDURE**

STEP	INSPECTION		ACTION
1	Are any drivability or exhaust smoke concerns present?	Yes	Go to appropriate flow chart.
		No	Go to next step.
2	Inspect following: • Electrical connections • Vacuum lines Are all items okay?	Yes	Go to next step.
		No	Service as necessary. Repeat step 2.
3	Connect NGS tester to DLC-2. Turn ignition switch to ON. Retrieve any DTC. Is "SYSTEM PASSED (NO DTCs AVAILABLE)" displayed?	Yes	**No DTC displayed:** Go to next step.
		No	**DTC displayed:** Go to appropriate DTC test.
4	Install fuel pressure gauge between fuel filter and fuel distributor. Start engine and run it at idle. Is fuel line pressure correct at idle? **Fuel line pressure:** **370—420 kPa** **{3.7—4.3 kgf/cm^2, 53—61 psi}**	Yes	Go to next step.
		No	**Zero or low:** • Inspect fuel pump circuit • Inspect for open fuel pump relief valve • Inspect for fuel leakage inside pressure regulator • Inspect for clogged main fuel line • Inspect pulsation damper **High:** • Inspect pressure regulator for high pressure cause • Inspect for clogged fuel return line
5	Inspect charcoal canister for fuel saturation. Is excess amount of liquid fuel present in canister?	Yes	Replace charcoal canister.
		No	Inspect fuel tank vent system. If fuel tank vent system is okay: Since sulfur content can vary in different fuels, suggest trying a different brand. If fuel tank vent system is not okay: Repair or replace malfunctioning parts.

Note

- If the malfunction remains even though all inspections have been performed, get assistance from technical hotline/your distributors.

27	INTERMITTENT CONCERNS		
DESCRIPTION	Symptom occurs randomly and is difficult to diagnose		
STEP	INSPECTION		ACTION
1	Talk to customer. Review vehicle service history. Does vehicle have a number of previous repairs and components replaced for a certain symptom?	Yes	Go to next step.
		No	Go to Symptom Index.
2	Turn ignition switch off. Connect NGS tester to DLC-2. If input is a switch-type component, turn on manually. Turn ignition switch to ON. Engine is off. Access PIDs for suspect component. Lightly tap on suspect component, wiggle and pull each wire/connector at suspect component or PCM. Are any PID values out of range, or do they suddenly change and go back into range?	Yes	Inspect each wire for corrosion, bent or loose terminal crimps.
		No	Go to next step.
3	Turn ignition switch to ON. Engine is running. Lightly tap on suspect component, wiggle and pull each wire/connector at suspect component or PCM. Are any PID values out of range, or do they suddenly change and go back into range?	Yes	Inspect each wire for corrosion, bent or loose terminal crimps.
		No	Go to next step.
4	Turn ignition switch to ON. Engine is running. Access PIDs for suspect component. Accurately spray water on suspect component wire, component or vacuum line related to possible fault area. Are any PID values out of range, or suddenly change and go back into range, or was there a noticeable engine misfire/stumble?	Yes	Fault area is identified. **If fault occurred while spraying on component:** Replace part and verify repair. **If fault occurred while spraying wiring:** Inspect each wire for corrosion, bent or loose terminals and poor wire terminal crimps. **If fault occurred while spraying vacuum line:** Repair vacuum hoses.
		No	Inspect wire and connector at suspect component for corrosion, bent or loose terminals, poor wire terminal crimps and high tension of wire. Repair as necessary.

29	FUEL REFILL CONCERNS
DESCRIPTION	Fuel tank does not fill smoothly
POSSIBLE CAUSE	• Clogged evaporative emission pipes • Non return valve malfunction • Fuel tank pressure control valve malfunction • Improper use of fuel nozzle • Inadequate fuel filling speed **Warning** **The following troubleshooting flow chart contains the fuel system diagnosis and repair procedures. Read the following warnings before performing the fuel system services:** • **Fuel vapor is hazardous. It can easily ignite, causing serious injury and damage. Always keep sparks and flames away from fuel.** • **Fuel line spills and leaks are dangerous. Fuel can ignite and cause serious injuries or death and damage. Fuel can also irritate skin and eyes. To prevent this, always complete "BEFORE REPAIR PROCEDURE" and "AFTER REPAIR PROCEDURE" described in this manual.** **☞ 01–14 BEFORE REPAIR PROCEDURE** **☞ 01–14 AFTER REPAIR PROCEDURE**

STEP	INSPECTION		ACTION
1	Retrieve DTCs. Are there any DTCs displayed?	Yes	Go to appropriate DTC test.
		No	Go to next step.
2	Remove fuel filler pipe. Make sure non return valve is installed properly. Inspect non return valve operation. Is non return valve okay?	Yes	Inspect as follows: • Improper use of fuel nozzle • Inadequate fuel filling speed • Fuel tank pressure control valve
		No	**If non return valve installed improperly:** Reinstall non return valve to proper position. **If non return valve does not operate properly:** Replace non return valve.

30	FUEL FILLING SHUT OFF ISSUES
DESCRIPTION	Fuel does not shut off properly
POSSIBLE CAUSE	• Clogged evaporative emission pipes • Non return valve malfunction • Fuel shut off valve malfunction • Fuel nozzle malfunction • Fuel nozzle does not insert correct **Warning** **The following troubleshooting flow chart contains the fuel system diagnosis and repair procedures. Read the following warnings before performing the fuel system services:** • **Fuel vapor is hazardous. It can easily ignite, causing serious injury and damage. Always keep sparks and flames away from fuel.** • **Fuel line spills and leaks are dangerous. Fuel can ignite and cause serious injuries or death and damage. Fuel can also irritate skin and eyes. To prevent this, always complete "BEFORE REPAIR PROCEDURE" and "AFTER REPAIR PROCEDURE" described in this manual.** **☞ 01–14 BEFORE REPAIR PROCEDURE** **☞ 01–14 AFTER REPAIR PROCEDURE**

STEP	INSPECTION		ACTION
1	Retrieve DTCs. Are there any DTCs displayed?	Yes	Go to appropriate DTC test.
		No	Go to next step.
2	Remove fuel filler pipe. Make sure that non return valve is installed properly. Inspect non return valve operation. Is non return valve okay?	Yes	Inspect as follows: • Fuel nozzle malfunction • Fuel does not insert correctly • Fuel shut off valve
		No	**If non return valve installed improperly:** Reinstall non return valve to proper position. **If non return valve does not operate properly:** Replace non return valve.

31	CONSTANT VOLTAGE
DESCRIPTION	Incorrect constant voltage
POSSIBLE CAUSE	Constant circuit malfunction **Note** • EGR boost sensor, FTP sensor, TP sensor and TCM use constant voltage.

STEP	INSPECTION		ACTION
1	Was constant voltage greater than 6.0 volts when measured in previous step?	Yes	Go to step 14.
		No	Go to next step.
2	Turn ignition switch to ON. Engine is off. Is voltage across battery terminals greater than 10.5 volts?	Yes	Go to next step.
		No	Inspect charging system.
3	Turn ignition switch to ON. Engine is off. Disconnect sensor where constant voltage circuit check failed. Measure voltage between battery positive terminal and ground (between PCM and appropriate sensor) circuit at appropriate sensor connector. Is voltage greater than 10.5 volts and within 1.0 volt of battery voltage?	Yes	Go to next step.
		No	Go to step 9.
4	**Note** • The purpose of this step is to determine if NGS tester is communicating with PCM. Turn ignition switch to ON. Engine is off. Attempt to access ECT PID. Can ECT PID be accessed?	Yes	Go to step 8.
		No	Go to next step.
5	Turn ignition switch off. Leave TP sensor disconnected. Disconnect EGR boost sensor connector. Turn ignition switch to ON. Engine is off. Measure voltage between constant voltage and ground circuits at TP sensor connector. Is voltage between 4.0 and 6.0 volts?	Yes	Replace EGR boost sensor.
		No	Go to next step.
6	Turn ignition switch off. Disconnect TP sensor connector. Leave PCM disconnected. Turn ignition switch to ON. Engine is off. Measure voltage between PCM connector terminals 1B and 3B. Is voltage greater than 10.5 volts?	Yes	Go to next step.
		No	Repair open circuit between PCM terminal 1B and main relay.
7	Turn ignition switch off. Leave TP, EGR boost and fuel tank pressure sensors connectors disconnected. Disconnect NGS tester from DLC-2. Measure resistance between PCM connector terminals 2I and 3B. Is resistance greater than 10,000 ohms?	Yes	Inspect for constant voltage at suspect sensor connector again. **Note** • Get assistance from technical Hotline/your distributor, then replace PCM if necessary.
		No	Repair constant voltage circuit short to ground.
8	Turn ignition switch off. Disconnect sensor connector where constant voltage circuit inspection failed. Leave PCM disconnected. Measure resistance between PCM connector terminal 2I and constant voltage circuit at appropriate sensor connector. Is resistance less than 5.0 ohms?	Yes	Inspect for constant voltage at suspect sensor connector again. **Note** • Get assistance from technical Hotline/your distributor, then replace PCM if necessary.
		No	Repair open constant voltage circuit.

STEP	INSPECTION		ACTION
9	**Note** • The purpose of this step is to determine if NGS tester is communicating with PCM. Turn ignition switch to ON. Engine is off. Attempt to access ECT PID. Can ECT PID be accessed?	Yes	Go to next step.
		No	Go to step 12.
10	Are DTCs present for two or more sensors connected to PCM terminal 3F circuit? **Sensors connected to PCM terminal 3F:** EGR boost sensor, TP sensor, IAT sensor, ECT sensor, FTP sensor, HO2S—11, HO2S—12.	Yes	Go to next step.
		No	Repair open circuit to sensor where constant voltage circuit inspection failed.
11	Turn ignition switch off. Disconnect NGS tester from DLC-2. Disconnect sensor connector where constant voltage circuit inspection failed. Leave PCM disconnected. Measure resistance between ground circuit at appropriate sensor connector and PCM connector terminal 3F. Is resistance less than 5.0 ohms?	Yes	Reconnect sensor connector. Go to next step.
		No	Repair open ground circuit.
12	Turn ignition switch off. Disconnect NGS tester from DLC-2. Leave PCM disconnected. Measure resistance between battery negative terminal and PCM connector terminals 3A, 3B and 3C. Is each resistance less than 5.0 ohms?	Yes	Go to next step.
		No	Repair open ground circuit to ground.
13	Turn ignition switch off. Measure resistance between ground circuit at following sensor connector and ground. • EGR boost sensor • Fuel tank pressure sensor • TP sensor • Engine coolant temperature sensor • Heated oxygen sensor • Intake-air temperature sensor Is each resistance less than 5.0 ohms?	Yes	Ground circuits are okay.
		No	Inspect for constant voltage at suspect sensor connector again. **Note** • Get assistance from technical hotline/your distributor, then replace PCM if necessary.
14	Turn ignition switch off. Disconnect sensor connector where constant voltage inspection failed. Disconnect TP fuel tank pressure sensor and EGR boost sensor connectors. Disconnect PCM connector. Turn ignition switch to ON. Engine is off. Measure voltage between constant voltage circuit at TP sensor connector and battery negative terminal. Is voltage less than 0.5 volts?	Yes	Inspect for constant voltage at suspect sensor connector again. **Note** • Get assistance from technical hotline/your distributor, then replace PCM if necessary.
		No	Repair constant voltage circuit short to power in harness.

ENGINE DIAGNOSTIC INSPECTION

X5U101W04

Spark Plug Condition Inspection Purpose

Inspecting spark plugs condition, can determine whether problem is related to a specific cylinder possibly all cylinders.

Procedure

1. Remove the spark plug.
2. Inspect spark plug condition.
3. Go to appropriate troubleshooting chart for further information.

Spark plug condition	Troubleshooting chart
Specific plug is wet or covered with carbon	1 "Wet/carbon stuck on specific plug"
Specific plug looks grayish white	2 "Grayish white with specific plug"
All plugs are wet or covered with carbon	3 "Wet/carbon stuck on all plugs"
All plugs look grayish white	4 "Grayish white with all plugs"

1 Wet/carbon stuck on specific plug

[TROUBLESHOOTING HINTS]
① Spark-No spark visible or spark weak
② Air/fuel mixture-Excessive fuel injection volume
③ Compression-No compression, low compression
Others
① Faulty spark plugs

Warning
The following troubleshooting flow chart contains the fuel system diagnosis and repair procedures. Read the following warnings before performing the fuel system services:
- **Fuel vapor is hazardous. It can easily ignite, causing serious injury and damage. Always keep sparks and flames away from fuel.**
- **Fuel line spills and leaks are dangerous. Fuel can ignite and cause serious injuries or death and damage. Fuel can also irritate skin and eyes. To prevent this, always complete "BEFORE REPAIR PROCEDURE" and "AFTER REPAIR PROCEDURE" described in this manual.**
  ☞ 01–14 BEFORE REPAIR PROCEDURE
  ☞ 01–14 AFTER REPAIR PROCEDURE

STEP	INSPECTION		ACTION
1	Is spark plug wet/covered with carbon by engine oil?	Yes	Working up and down, inspect all areas related to oil.
		No	Go to next step.
2	Inspect spark plug for following. • Cracked insulator • Heating value • Air gap • Worn electrode Is spark plug okay?	Yes	Go to next step.
		No	Replace spark plug.
3	Inspect compression pressure at suspected faulty cylinder. Is compression pressure correct? ☞ 01–10 COMPRESSION INSPECTION	Yes	Go to next step.
		No	Repair or replace malfunctioning part.
4	Install all spark plugs. Carry out spark test at suspected faulty cylinder. Is strong blue spark visible? (Compare with normal cylinder.)	Yes	Go to next step.
		No	Repair or replace malfunctioning part.
5	Perform fuel line pressure test. ☞ 01–14 PRESSURE REGULATOR INSPECTION Is fuel line pressure okay?	Yes	Inspect fuel injector for following. • Open or short in injector • Leakage • Injection volume
		No	Zero or low: • Inspect fuel pump circuit • Inspect for fuel pump relief valve open • Inspect for fuel leakage inside pressure regulator • Inspect for clogged main fuel line • Inspect pulsation damper High: • Inspect pressure regulator for high pressure cause • Inspect for clogged fuel return line

2	Grayish white with specific plug

[TROUBLESHOOTING HINTS]
① Air/fuel mixture-Insufficient fuel injection volume
Others
① Faulty spark plug

Warning
The following troubleshooting flow chart contains the fuel system diagnosis and repair procedures. Read the following warnings before performing the fuel system services:
- **Fuel vapor is hazardous. It can easily ignite, causing serious injury and damage. Always keep sparks and flames away from fuel.**
- **Fuel line spills and leaks are dangerous. Fuel can ignite and cause serious injuries or death and damage. Fuel can also irritate skin and eyes. To prevent this, always complete "BEFORE REPAIR PROCEDURE" and "AFTER REPAIR PROCEDURE" described in this manual.**
  ☞ 01–14 BEFORE REPAIR PROCEDURE
  ☞ 01–14 AFTER REPAIR PROCEDURE

STEP	INSPECTION		ACTION
1	Inspect spark plug for following. • Heating value • Air gap Are they okay?	Yes	Go to next step.
		No	Replace spark plug.
2	Remove suspected fuel injector. Inspect following: • Resistance ☞ 01–14 FUEL INJECTOR INSPECTION • Fuel injection volume ☞ 01–14 FUEL INJECTOR INSPECTION Are all above items okay?	Yes	Inspect for open circuit between suspected fuel injector connector terminal and PCM connector following terminal: For #1 cyl: 3W For #2 cyl: 3X For #3 cyl: 3Y For #4 cyl: 3Z
		No	Replace fuel injector.

3	Wet/carbon stuck on all plugs

[TROUBLESHOOTING HINTS]
① Spark-Spark weak
② Air/fuel mixture-Too rich
③ Compression-Low compression
Others
① Clogs in intake/exhaust system

Warning
The following troubleshooting flow chart contains the fuel system diagnosis and repair procedures. Read the following warnings before performing the fuel system services:
- **Fuel vapor is hazardous. It can easily ignite, causing serious injury and damage. Always keep sparks and flames away from fuel.**
- **Fuel line spills and leaks are dangerous. Fuel can ignite and cause serious injuries or death and damage. Fuel can also irritate skin and eyes. To prevent this, always complete "BEFORE REPAIR PROCEDURE" and "AFTER REPAIR PROCEDURE" described in this manual.**
  ☞ 01–14 BEFORE REPAIR PROCEDURE
  ☞ 01–14 AFTER REPAIR PROCEDURE

STEP	INSPECTION		ACTION
1	Is air cleaner element free of restrictions?	Yes	Go to next step.
		No	Replace air cleaner element.
2	Carry out spark test. Is a strong blue spark visible at each cylinder?	Yes	Go to next step.
		No	Repair or replace.
3	Carry out fuel pressure inspection. Is fuel pressure correct? **Fuel line pressure:** **370—420 kPa** **{3.7—4.3 kgf/cm^2, 53—61 psi}**	Yes	Go to next step.
		No	Zero or low: • Inspect fuel pump circuit • Inspect for fuel pump relief valve open • Inspect for fuel leakage inside pressure regulator • Inspect for clogged main fuel line • Inspect pulsation damper High: • Inspect pressure regulator for high pressure cause • Inspect for clogged fuel return line

STEP	INSPECTION		ACTION
4	Inspect following PID. • MAF V PID ☞ 01–40 MASS AIR FLOW SENSOR INSPECTION • ECT PID ☞ 01–40 ENGINE COOLANT TEMPERATURE SENSOR INSPECTION • HO2S11, HO2S12 PID ☞ 01–40 HEATED OXYGEN SENSOR INSPECTION (When engine can be started.) Are PIDs okay?	Yes	Go to next step.
		No	Repair or replace.
5	Carry out purge control inspection (When engine can be started.) ☞ 01–01A ENGINE SYSTEM INSPECTION, Purge Control Inspection Is purge control correct?	Yes	Go to next step.
		No	Repair or replace.
6	Carry out compression inspection. Is compression correct?	Yes	Inspect clogs in exhaust system.
		No	Repair or replace.

4	Grayish white with all plugs

[TROUBLESHOOTING HINTS]
① Air/fuel mixture-Too lean

Warning
The following troubleshooting flow chart contains the fuel system diagnosis and repair procedures. Read the following warnings before performing the fuel system services:
- **Fuel vapor is hazardous. It can easily ignite, causing serious injury and damage. Always keep sparks and flames away from fuel.**
- **Fuel line spills and leaks are dangerous. Fuel can ignite and cause serious injuries or death and damage. Fuel can also irritate skin and eyes. To prevent this, always complete "BEFORE REPAIR PROCEDURE" and "AFTER REPAIR PROCEDURE" described in this manual.**
  ☞ 01–14 BEFORE REPAIR PROCEDURE
  ☞ 01–14 AFTER REPAIR PROCEDURE

STEP	INSPECTION		ACTION
1	When engine cannot be started, inspect intake-air system for air leakage. When engine can be started, carry out intake manifold vacuum inspection. Is air sucked in from intake-air system?	Yes	Repair or replace.
		No	Go to next step.
2	Carry out fuel pressure inspection. Is fuel pressure correct? **Fuel line pressure:** **370—420 kPa** **{3.7—4.3 kgf/cm^2, 53—61 psi}**	Yes	Inspect following PID. • MAF V PID ☞ 01–40 MASS AIR FLOW SENSOR INSPECTION • ECT PID ☞ 01–40 ENGINE COOLANT TEMPERATURE SENSOR INSPECTION • O2S11, O2S12 PID ☞ 01–40 HEATED OXYGEN SENSOR INSPECTION (When engine can be started.) • Inspect PCM ground condition
		No	Zero or low: • Inspect fuel pump circuit • Inspect for fuel pump relief valve open • Inspect for fuel leakage inside pressure regulator • Inspect for clogged main fuel line • Inspect pulsation damper High: • Inspect pressure regulator for high pressure cause • Inspect for clogged fuel return line

Input Signal System Investigation Procedure

1. Find an unusual signal (Refer to procedures below).
2. Locate its source (Refer to procedures below).
3. Repair or replace the defective part.
4. Confirm that the unusual signal has been erased.

Finding Unusual Signals

While referring to the diagnostic trouble code inspection section of the on-board diagnostic system, use the PID monitor to check the input signal system relating to the problem.

1. Turn the ignition to ON and idle the vehicle. You can assume that any signals that are out of specifications by a wide margin are unusual.
2. When recreating the problem, any sudden change in monitor input signals that is not consciously created by the driver can be judged as unusual.

Locating the Source of Unusual Signals

Caution

- **Compare the NGS monitor voltage with the measurement voltage using the NGS "DIGITAL MEASUREMENT SYSTEM" function. If you use another tester, misreading may occur.**
- **When measuring voltage, attach the tester ground to the GND of the PCM that is being tested, or to the engine itself. If this is not done, the measured voltage and actual voltage may differ.**
- **After connecting the pin to a waterproof coupler, confirming continuity and measuring the voltage, check the waterproof connector for cracks. If there are any, use sealant to fix them. Failure to do this may result in deterioration of the harness or terminal from water damage, leading to problems with the vehicle.**

Variable Resistance Type 1 (Throttle Position, Fuel Tank Pressure and Barometric Absolute Pressure Sensors)

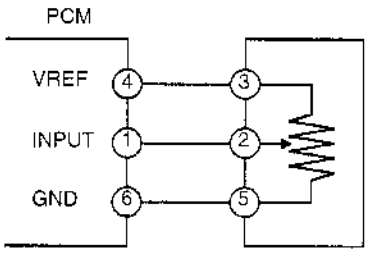

X5U1C1WAA

Investigate the input signal system

1. When you get an unusual signal, measure the #1 PCM terminal voltage.
   (1) If the #1 terminal voltage and the NGS monitor voltage are the same, proceed to the next step.
   (2) If there is a difference of 0.5 V or more, inspect the following points concerning the PCM connector:
   - Female terminal opening loose
   - Coupler (pin holder) damage
   - Pin discoloration (blackness)
   - Harness/pin clamp is loose or disconnected
2. When you get an unusual signal, measure the #2 sensor terminal voltage.
   (1) If there is a 0.5 V or more difference between the sensor and NGS voltages, inspect the harness for open or short circuits.
   (2) If the sensor and NGS voltages are the same, inspect the following points concerning the sensor connector. If there are no problems, proceed to next investigation below.
   - Female terminal opening loose
   - Coupler (pin holder) damage
   - Pin discoloration (blackness)
   - Harness/pin clamp is loose or disconnected

Investigate the standard power supply system

1. Confirm that the #3 terminal is at 5 V.
   (1) If the measured voltage on the #3 terminal is 5 V, inspect the following points on the sensor connector. If there is no problem, proceed to next investigation below.
   - Female terminal opening loose
   - Coupler (pin holder) damage
   - Pin discoloration (blackness)
   (2) If the #3 terminal measures other than 5 V, inspect the following points:
   - Open or short circuit in harness
   - Harness/pin clamp is loose or disconnected

Investigate the GND system

1. Confirm that terminal sensor #5 is at 0 V.
   (1) If it is at 0 V, inspect the sensor. If necessary, replace the sensor.
   (2) If not, inspect the following points:
   - Open or short circuit in harness
   - Female terminal opening loose
   - Coupler (pin holder) damage
   - Pin discoloration (blackness)
   - Harness/pin clamp is loose or disconnected

Variable Resistance Type 2 (Fuel Tank Level and Mass Airflow Sensors)

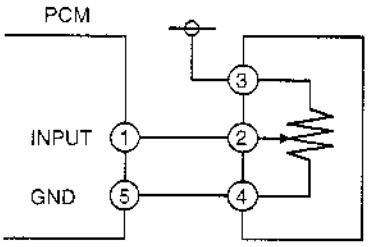

X5U101WAB

Investigate the input signal system

1. When you get an unusual signal, measure the #1 PCM terminal voltage.
   (1) If the #1 terminal voltage and the NGS monitor voltage are the same, proceed to the next step.

(2) If there is a difference of 0.5 V or more, inspect the following points concerning the PCM connector:
- Female terminal opening loose
- Coupler (pin holder) damage
- Pin discoloration (blackness)
- Harness/pin clamp is loose or disconnected

2. When you get an unusual signal, measure the #2 sensor terminal voltage.
   (1) If there is a 0.5 V or more difference between the sensor and NGS voltages, inspect the harness for open or short circuits.
   (2) If the sensor and NGS voltages are the same, inspect the following points concerning the sensor connector. If there are no problems, proceed to next investigation below.
   - Female terminal opening loose
   - Coupler (pin holder) damage
   - Pin discoloration (blackness)
   - Harness/pin clamp is loose or disconnected

Investigate the electrical supply system

1. Confirm that the sensor #3 terminal is B+.
   (1) If the measured voltage on the #3 terminal is B+, inspect the following points on the sensor connector. If there is no problem, proceed to next investigation below.
   - Female terminal opening loose
   - Coupler (pin holder) damage
   - Pin discoloration (blackness)

   (2) If the #3 terminal measures other than B+, inspect the following points:
   - Open or short circuit in harness
   - Harness/pin clamp is loose or disconnected

Investigate the GND system

1. Confirm that terminal sensor #4 is at 0 V.
   (1) If it is at 0 V, inspect the sensor. If necessary, replace the sensor.
   (2) If not at, 0 V, inspect the following points:
   - Open circuit in harness
   - Female terminal opening loose
   - Coupler (pin holder) damage
   - Pin discoloration (blackness)
   - Harness/pin clamp is lose or disconnected

Thermistor Type (Intake Air Temperature and Engine Coolant Temperature Sensors)

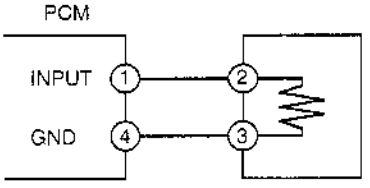

X5U101WAC

Investigate the input signal system

1. When you get an unusual signal, measure the #1 PCM terminal voltage.
   (1) If the #1 terminal voltage and the NGS monitor voltage are the same, proceed to the next step.
   (2) If there is a difference of 0.5 V or more, check the following points concerning the PCM connector:
   - Female terminal opening loose
   - Coupler (pin holder) damage
   - Pin discoloration (blackness)
   - Harness/pin clamp is loose or disconnected

2. When you get an unusual signal, measure the #2 sensor terminal voltage.
   (1) If there is a 0.5 V or more difference between the sensor and NGS voltages, inspect the harness for open or short circuits.
   (2) If the sensor and NGS voltages are the same, inspect the following points concerning the sensor connector. If there are no problems, proceed to next investigation below.
   - Female terminal opening loose
   - Coupler (pin holder) damage
   - Pin discoloration (blackness)
   - Harness/pin clamp is loose or disconnected

Investigate the GND system

1. Confirm that terminal sensor #3 is at 0 V.
   (1) If it is at 0 V, inspect the sensor. If necessary, replace the sensor.
   (2) If not, inspect the following points:
   - Open or short circuit in harness
   - Female terminal opening loose
   - Coupler (pin holder) damage
   - Pin discoloration (blackness)
   - Harness/pin clamp is loose or disconnected

Vehicle Speed Sensor

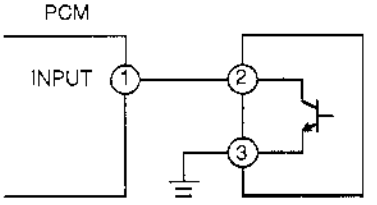

X5U101WAD

1. Measure the #1 PCM terminal voltage and confirm that it is at 0 V or 5 V when the ignition switch is at ON and the engine at idle.
   (1) If it is at 0 V or 5 V, proceed to "Intermittent Diagnostic Test".
   (2) If not, inspect the following points concerning the PCM connector. If there is no problems, proceed to next step.
   - Female terminal opening loose
   - Coupler (pin holder) damage
   - Pin discoloration (blackness)
   - Harness/pin clamp is loose or disconnected

2. Measure the #2 sensor terminal voltage and confirm that it is at 0 V or 5 V when the ignition switch is at ON and the engine at idle.
   (1) If it is at 0 V or 5 V, proceed to "Intermittent Diagnostic Test".
   (2) If not, inspect the following points concerning the sensor connector: If there are no problems, proceed to next step.
   - Female terminal opening loose
   - Coupler (pin holder) damage
   - Pin discoloration (blackness)
   - Harness/pin clamp is loose or disconnected
3. Confirm that the #3 terminal switch voltage is at 0 V.
   (1) If it is at 0 V, inspect the sensor. If necessary, replace the sensor.
   (2) If not at 0 V, inspect the following points:
   - Open circuit in harness
   - Female terminal opening loose
   - Coupler (pin holder) damage
   - Pin discoloration (blackness)
   - Harness/pin clamp is loose or disconnected.

Inspection Using an Oscilloscope (Reference)
Purpose
By using an oscilloscope, inspection such as a stuck solenoid valve is made possible without actually removing parts.

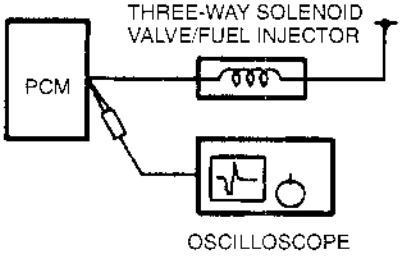

X5U101WAE

When normal
Counter electromotive voltage A, generated when the three-way solenoid valve or the fuel injector is turned off from on, shows irregular convergence because induced electromotive voltage B, generated by the plunger return operation, is added to it.

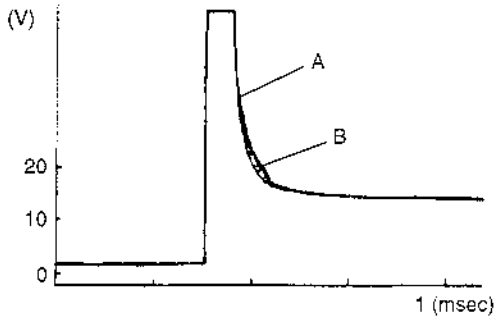

X5U101WAF

When plunger stuck
When the plunger is stuck, pulse convergence is smooth because no induced electromotive voltage B is generated.

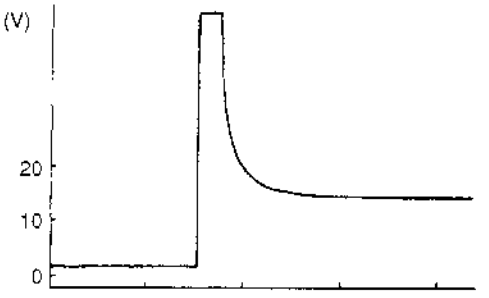

X5U101WAG

Fuel Tank Pressure, Graph Recording Procedure
1. After setting up the NGS tester for current vehicle, select "DIAGNOSTIC DATA LINK" and press the TRIGGER.

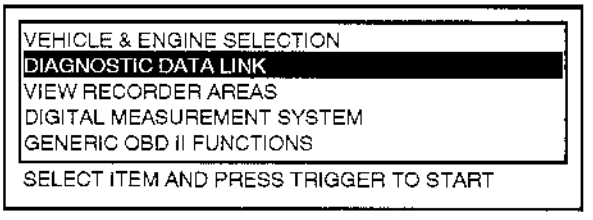

X5U101WAH

2. Select, "PCM – POWERTRAIN CONTROL MODULE" and press the TRIGGER.

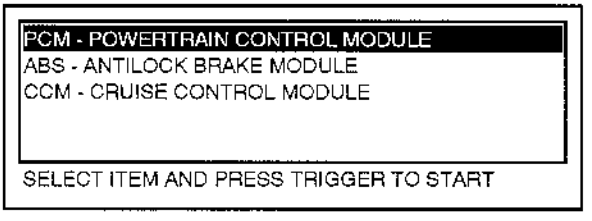

X5U101WAI

3. Select "PID/DATA MONITOR AND RECORD" and press the TRIGGER.

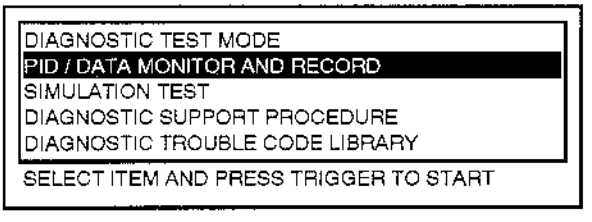

X5U101WAJ

4. Press Number 5 under CLEAR to clear previously selected PIDs.

Note
- PID screen will vary with different models.

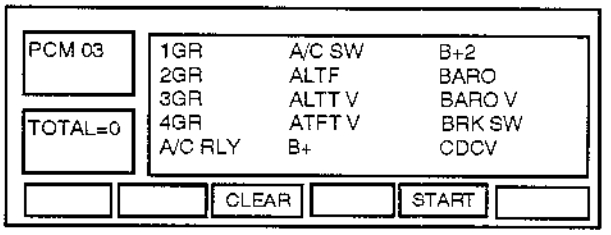

X5U10:WAK

5. Turn the menu dial clockwise or counterclockwise to highlight CDCV and select by pressing the TRIGGER.

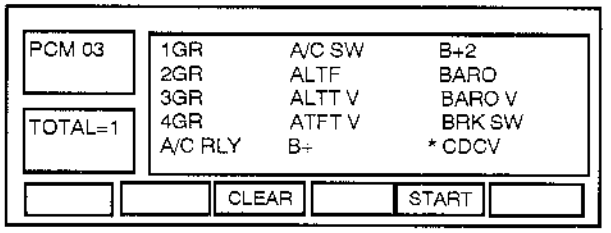

X5U101WAL

6. Turn the menu dial clockwise or counterclockwise to highlight FTP and select by pressing the TRIGGER.

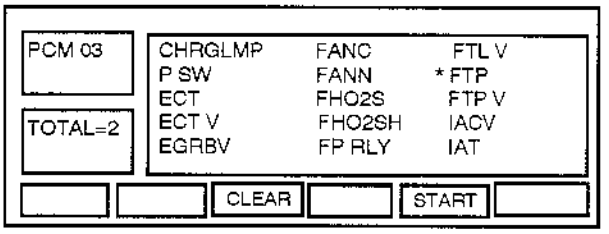

X5U10:WAM

7. PUSH Number 7 under START to view PIDs.

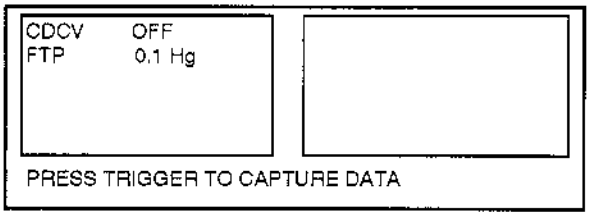

X5U101WAN

8. When you begin the drive mode PRESS TRIGGER to capture the data refer to the DRIVE MODE PROCEDURE.

Note
- Watch the CDCV PID. When the evaporative system is tested the display will change from OFF to ON. And when the test is complete the display will change back to OFF.

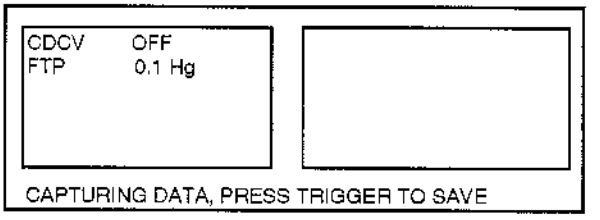

X5U101WAO

9. When the monitor changes back to OFF wait a few seconds and press the TRIGGER to save the recorded information.
10. Select VIEW RECORDING then press the TRIGGER.

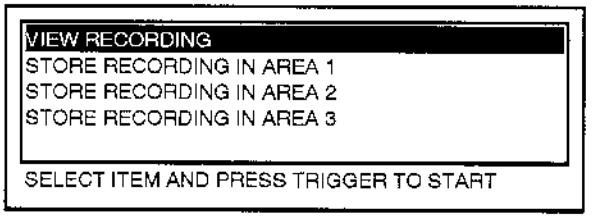

X5U101WAP

11. Select both PIDs by highlighting and pressing the TRIGGER.

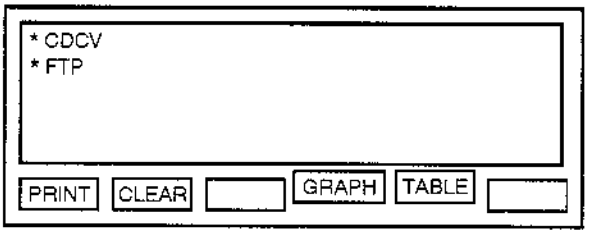

X5U101WAQ

12. Press the number key under GRAPH.

Note
- It will be necessary to press Number 8 key to advance the graph to the point where the CDCV is turned on.

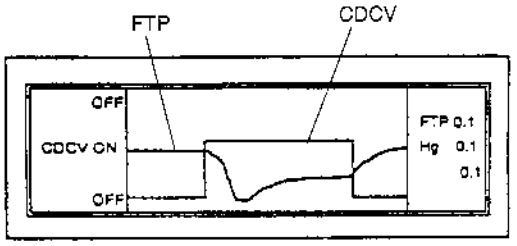

X5U101WAR

ENGINE SYSTEM INSPECTION

X5U101W05

Intake Manifold Vacuum Inspection

1. Verify air intake hoses are installed properly.
2. Start the engine and run at idle.
3. Measure the intake manifold vacuum by using a vacuum gauge.

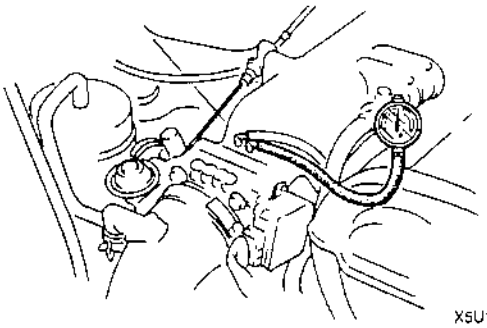

X5U101WAS

Specification
More than 60 kPa {450 mmHg, 18 inHg}

4. If not as specified, inspect following.
   - Air suction at:
     Throttle body installation point
     Intake manifold installation point
     PCV valve installation point
   - Fuel injector insulator
   - Accelerator cable free play
   - Engine compression (Refer to section B, COMPRESSION INSPECTION.)

Note
- Air suction can be located by engine speed change when lubricant is sprayed on the area where suction is occurring.

BAC Valve Operation Inspection

1. Connect the NGS tester to DLC-2.

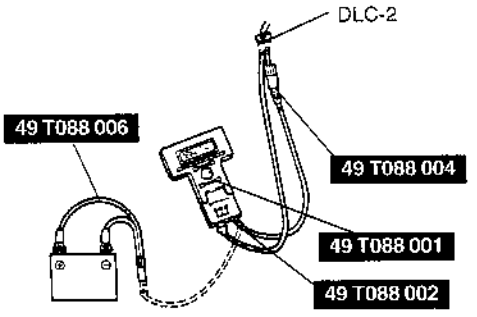

X5U101WAT

2. Select "PID/DATA MONITOR AND RECORD" and press TRIGGER.
3. Select "RPM" and press TRIGGER.
4. Verify that the engine is in cold condition, then start the engine.
5. Verify that the engine speed decreases as the engine warms up.
6. If the engine speed does not decrease or decreases slowly, inspect the water hose connected to the BAC valve for leakage and clogs.
7. If the water hose is okay, inspect the following.
   - Air valve
   - Idle air control valve

Idle Air Control Inspection

1. Start the engine and run it at idle.
2. Disconnect the IAC valve connector and verify that the engine rotation changes.

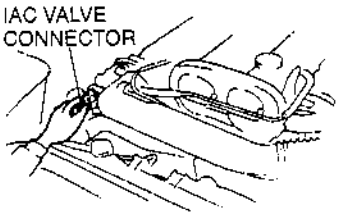

X5U101WAU

3. If the engine condition does not change, do as follows.
   (1) Connect the IAC valve connector.
   (2) Connect the NGS tester to DLC-2.

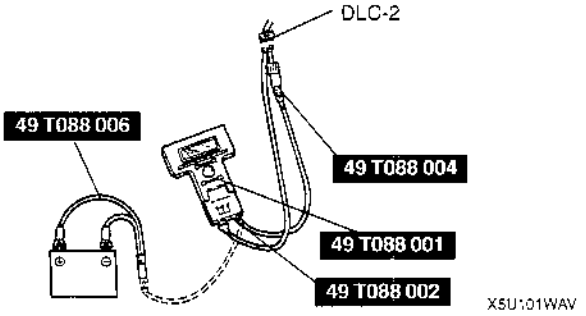

   (3) Verify that DTC P0506, P0507 or P1504 is not displayed. If DTC P0506, P0507 or P1504 is shown, carry out troubleshooting of the DTC P0506, P0507 or P1504.
   (4) Select the "SIMULATION TEST" function on the NGS display. Change the duty value of the IAC valve to 100% by using the "IAC V" and verify that the idle speed increases. If the idle speed does not change, inspect IAC valve air passage. Inspect for open or short circuit between IAC valve connector terminals and PCM connector terminals 3M and 3O.
4. Warm up the engine to normal operating temperature and run it at idle.
5. Turn the electrical loads on and verify that the engine speed is within the specification by using "PID/DATA MONITOR AND RECORD" function.

Engine speed

Load condition	Idle-up speed (rpm)*1		
	MT	AT	
		N, P position	D range
E/L ON*2	750—850 (800 ± 50)	750—850 (800 ± 50)	700—800 (750 ± 50)
P/S ON*3			
A/C ON*4	950—1050 (1000 ± 50)		

*1 : Excludes temporary idle speed drop just after the electrical loads (E/L) are turned on.
*2 : Headlight is on, Fan switch (above 1st), Cooling fan are operating, Rear window defroster is on.
*3 : Steering wheel is fully turned.
*4 : A/C switch and fan switch are on.

Note
- Excludes temporary idle speed drop just after the electrical loads are turned on.

6. If not as specified, inspect the related switches and wiring harnesses.

VICS Operation Inspection
1. Start the engine.
2. Verify that the rod of the VICS shutter valve actuator is pulled.

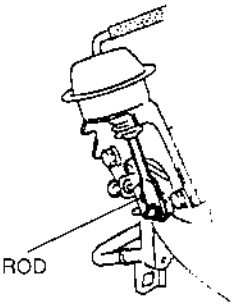

3. If the rod is not pulled, do as follows.
   (1) Stop the engine.
   (2) Connect the NGS tester to DLC-2. (Refer to 01–40 POWERTRAIN CONTROL MODULE (PCM) INSPECTION.)
   (3) Verify that diagnostic trouble code No. P1523 is not displayed. If code No. P1523 is shown, carry out troubleshooting of the code No. P1523. (Refer to 01–01A ENGINE ON-BOARD DIAGNOSIS, Diagnostic Trouble Code Inspection.)
   (4) If diagnostic trouble codes are not shown, do as follows.
      ① Start the engine and run it at idle.
      ② Select the SIMULATION TEST function on the NGS display.

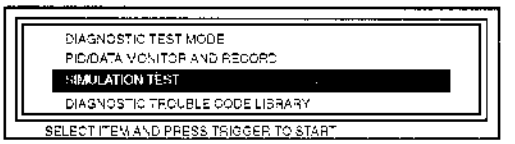

      ③ Turn the VICS solenoid valve from on to off by using the "VICS V" and inspect if operation sound of the solenoid valve is heard.
      ④ If the operation sound is heard, inspect the following.
      - Loose or damaged vacuum hose and vacuum chamber
      - Shutter valve actuator (Refer to 01–13 SHUTTER VALVE ACTUATOR INSPECTION.)
      ⑤ If the operation sound is not heard, inspect the following.
      - VICS solenoid valve (Refer to 01–13 VICS SOLENOID VALVE INSPECTION.)
4. Inspect the rod operation under the following conditions.

Rod operation

Engine speed (rpm)	5250	
Shutter valve actuator	Not operate	Operate

5. If the rod operation is not as specified, do as follows.
   (1) Stop the engine.
   (2) Connect the NGS tester to DLC-2. (Refer to 01–40 POWERTRAIN CONTROL MODULE (PCM) INSPECTION.)
   (3) Verify that diagnostic trouble code No. P1523 is not displayed. If code No. P1523 is shown, carry out troubleshooting of the code No. P1523. (Refer to 01–01A ENGINE ON-BOARD DIAGNOSIS [BP], Diagnostic Trouble Code Inspection.)
   (4) If diagnostic trouble codes are not shown, do as follows.
      ① Start the engine and run it at idle.
      ② Select the SIMULATION TEST function on the NGS display.

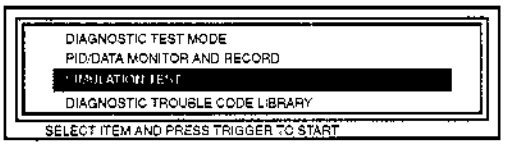

X5U101WAY

      ③ Turn the VICS solenoid valve from on to off by using the "VICS V" and inspect if operation sound of the solenoid valve is heard.
      ④ If the operation sound is heard, inspect the following.
      - Shutter valve actuator (Refer to 01–13 SHUTTER VALVE ACTUATOR INSPECTION [BP].)
      ⑤ If the operation sound is not heard, inspect the following.
      - VICS solenoid vale (Refer to 01–13 VICS SOLENOID VALVE INSPECTION [BP].)

Note
- The shutter valve actuator rod extends for five seconds after the engine is started.

Fuel Line Pressure Inspection

Warning
- **Fuel line spills and leaks are dangerous. Fuel can ignite and cause serious injuries or death and damage. Always carry out the following procedure with the engine stopped.**

1. Complete the "BEFORE REPAIR PROCEDURE". (Refer to 01–14 BEFORE REPAIR PROCEDURE.)
2. Disconnect the negative battery cable.
3. Disconnect the fuel pipe on the pulsation damper No.1 outlet side. Set the **SST** between the pulsation damper No.1 and fuel distributor as shown in the figure. (Refer to 01–14 FUEL INJECTOR REMOVAL/INSTALLATION, Fuel Pipe Removal Note.)

Note
- Verify that a click is heard when the **SST** is pushed into the pulsation damper No.1

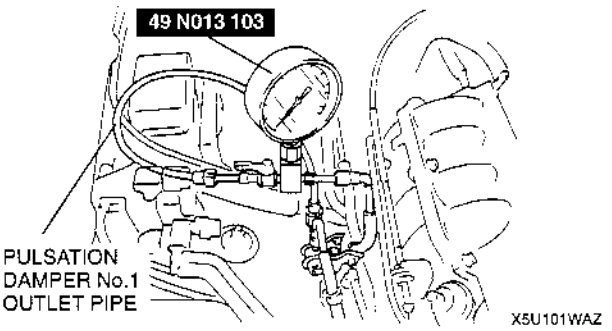

X5U101WAZ

4. Pull the connector by hand and verify that it is installed securely. Visually inspect that the tabs of the retainer are securely fitted into the connector.
5. Connect the negative battery cable.
6. Start the engine and let it idle. Measure the fuel line pressure.

Fuel line pressure
370—420 kPa {3.7—4.3 kgf/cm^2, 53—61 psi}

7. If not as specified, refer to 01–14 PRESSURE REGULATOR INSPECTION, Fuel Line Pressure Inspection.
8. Disconnect the **SST** and connect the fuel pipe to the pulsation damper No.1. (Refer to 01–14 FUEL INJECTOR REMOVAL/INSTALLATION, Fuel Pipe Installation Note.)
9. Complete the "AFTER REPAIR PROCEDURE" (Refer to FUEL SYSTEM, AFTER REPAIR PROCEDURE.)

Fuel Hold Pressure Inspection

Warning
- **Fuel line spills and leaks are dangerous. Fuel can ignite and cause serious injuries or death and damage. Always carry out the following procedure with the engine stopped.**

1. Complete the "BEFORE REPAIR PROCEDURE". (Refer to 01–14 BEFORE REPAIR PROCEDURE.)
2. Disconnect the negative battery cable.
3. Disconnect the fuel pipe on the pulsation damper No.1 outlet side. Set the **SST** between the pulsation damper No.1 and fuel distributor as shown in the figure. (Refer to 01–14 FUEL INJECTOR REMOVAL/INSTALLATION, Fuel Pipe Removal Note.)

Note
- Verify that a click is heard when the **SST** is pushed into the pulsation damper No.1.

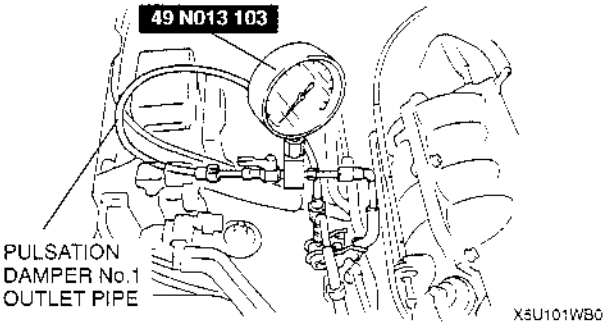

4. Pull the connector by hand and verify that it is installed securely. Visually inspect that the tabs of the retainer are securely fitted into the connector.
5. Connect the negative battery cable.
6. Verify that vehicles for AT is at N range and MT is at neutral position, then start the engine.
7. Observe the fuel pressure gauge indicator while heavy acceleration.
8. Verify that the fuel pressure holds steady within specification during the test.

Fuel hold pressure
370—420 kPa {3.7—4.3 kgf/cm^2, 53—61 psi}

9. Disconnect the **SST** and connect the fuel pipe to the pulsation damper No.1. (Refer to 01–14 FUEL INJECTOR REMOVAL/INSTALLATION, Fuel Pipe Installation Note.)
10. If not as specified, refer to 01–14 PRESSURE REGULATOR INSPECTION, Fuel Hold Pressure Inspection.

Fuel Pump Operation Inspection
1. Connect the NGS tester to the DLC-2.

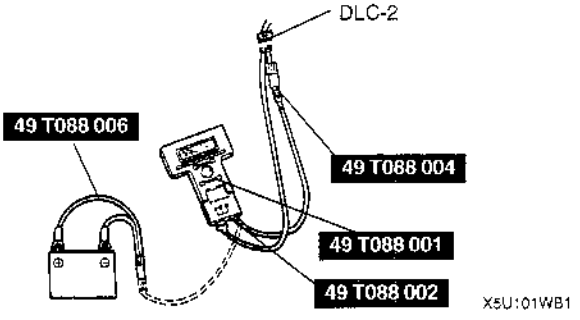

2. Remove the fuel filler cap.
3. Turn the ignition switch to ON.
4. Select the "SIMULATION TEST" function on the NGS display. Turn the fuel pump relay from OFF to ON by using the "F/P RLY" and inspect if the operation sound is heard.
5. If no operation sound is heard, measure the voltage at harness side fuel pump connector terminal B.

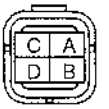

Specification
Battery positive voltage (Ignition switch ON)

6. If the voltage is as specified, inspect the following.
   - Fuel pump continuity
   - Fuel pump ground
   - Wiring harness between fuel pump relay and PCM terminal 3N
7. If not as specified, inspect the following.
   - Fuel pump relay
   - Wiring harness and connector
     Between main relay and fuel pump relay
     Between fuel pump relay and fuel pump

Fuel Pump Control Inspection
1. Connect the NGS tester to DLC-2.

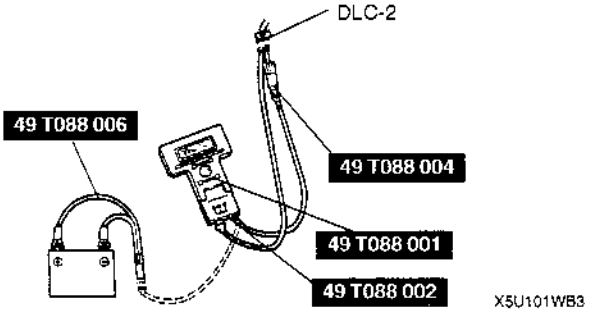

2. Turn the ignition switch to ON.
3. Select "SIMULATION TEST" and press TRIGGER.
4. Select "IG ON TEST" and press TRIGGER.
5. Select "FP RLY" and press TRIGGER.
6. Press START.
7. Turn the fuel pump relay from off to on and inspect if operation sound of the fuel pump relay is heard.
8. If the operation sound is not heard, inspect the fuel pump relay.
9. If the fuel pump relay is normal, inspect the following.
   - Wiring harnesses and connectors
     {Main relay—fuel pump relay—PCM}

Evaporative Emission Control System Inspection
Whole system inspection

1. Disconnect the vacuum hose between the purge solenoid valve and the catch tank from the purge solenoid valve.
2. Insert hose on the vacuum pump.
3. Connect the NGS tester to the DLC-2.
4. Turn the ignition switch to ON.
5. Select "GENERIC OBD II FUNCTIONS" and press the TRIGGER.

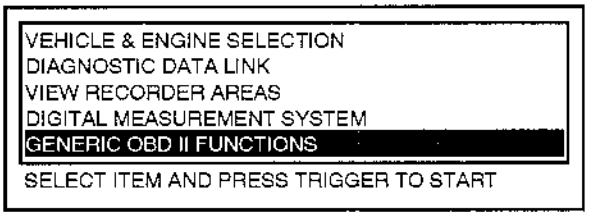

X5U101WB6

6. Press Number 8 under CONT to continue the GENERIC OBD II FUNCTIONS.

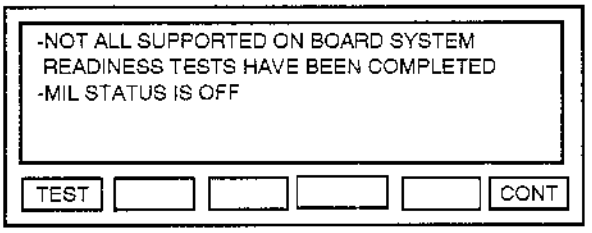

X5U101WEE

Note

- The following conditions cancel the "ON BOARD DEVICE CONTROL" functon:
  1. Ten minutes after the "TRIGGER" on the NGS tester is depressed.
  2. When engine is started.
  3. If the pressure in the evaporative emission control system exceeds 6.43 kPa {48.26 mmHg, 1.9 inHg}.
- Therefore, the following tests, step 7 through 15, should be conducted under the following conditions.
  1. Within 10 minutes after TRIGGER on NGS tester is depressed.
  2. Without starting the engine.

7. Turn the menu dial clockwise or counterclockwise to highlight the "ON BOARD DEVICE CONTROL" and press the TRIGGER.

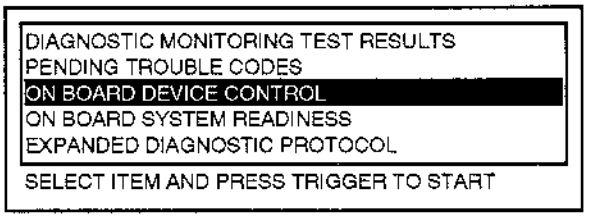

X5U101WB7

8. Press CANCEL two times.
9. Select "DIAGNOSTIC DATA LINK" and press the TRIGGER.

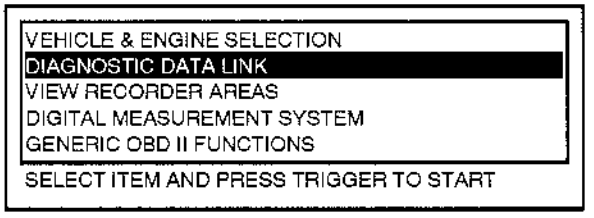

X5U101WB8

10. Select "PCM – POWERTRAIN CONTROL MODULE" and press the TRIGGER.

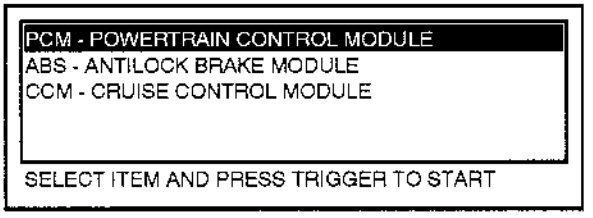

X5U101WB9

11. Select "PID/DATA MONITOR AND RECORD" and press the TRIGGER.

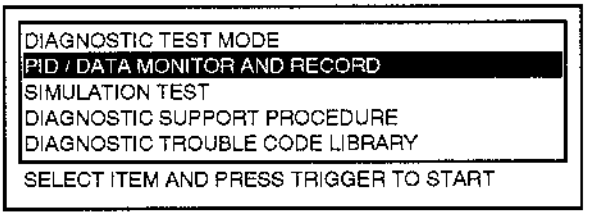

X5U101WBA

12. Press Number 5 under CLEAR to clear previously selected PIDs.

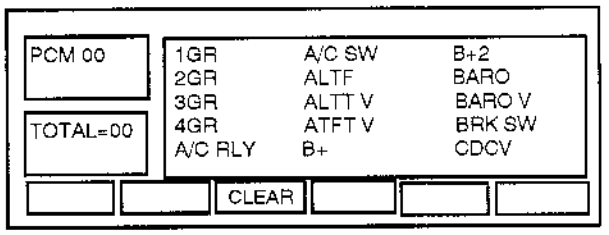

X5U101WBB

13. Turn the menu dial clockwise or counterclockwise to highlight FTP and press TRIGGER.

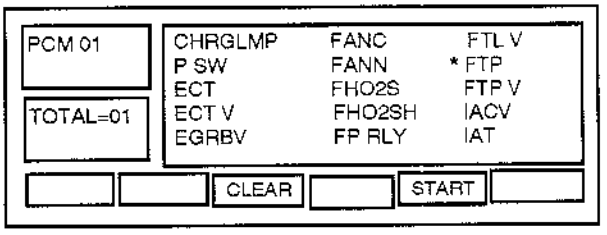

X5U101WBC

14. Press Number 7 under STRAT to view PIDs.

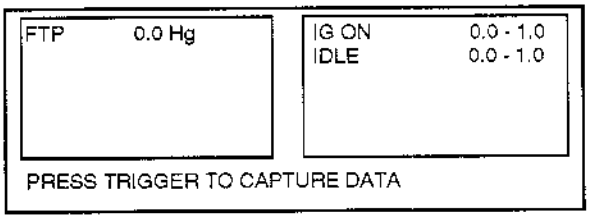

X5U101WBD

15. Apply vacuum to 1.7 kPa {13 mmHg, 0.5 inHg} and they should remain at the specified readings for a minimum of 2 minutes.

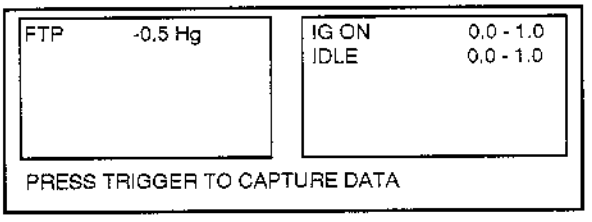

X5U101WBE

16. Return to the Diagnostic Trouble Code Inspection Procedures, and answer questions.

Inspection from charcoal canister to fuel tank

1. Inspect for loose and wrongly connected hoses between the charcoal canister and the fuel tank refer to "01–16 Evaporative Emission Control System Components Location".
2. Disconnect the vacuum hose between the charcoal canister and the tank pressure control valve from the charcoal canister.
3. Insert hose on the vacuum pump.
4. Connect the NGS tester to DLC-2.
5. Turn the ignition switch to ON.
6. Select "GENERIC OBD II FUNCTIONS" and press the TRIGGER.

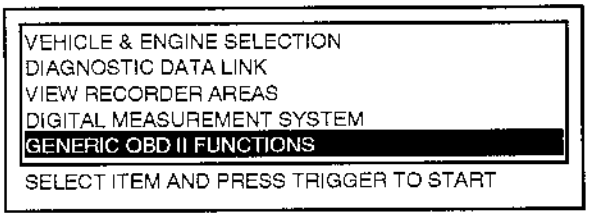

X5U101WBG

7. Press Number 8 under CONT to continue the GENERIC OBD II FUNCTIONS.

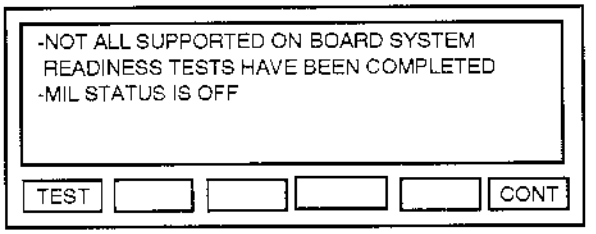

X5U101WBH

Note

- The following conditions cancel the "ON BOARD DEVICE CONTROL" function:
  1. Ten minutes after the TRIGGER on the NGS tester is depressed.
  2. When engine is started.
  3. If the pressure in the evaporative emission control system exceeds 6.43 kPa {48.26 mmHg, 1.9 inHg}.
- Therefore, the following tests, steps 8 through 16, should be conducted under the following conditions.
  1. Within 10 minutes after TRIGGER on NGS tester is depressed.
  2. Ignition switch is ON, but is not started engine.

8. Turn the menu dial clockwise or counterclockwise to highlight the "ON BOARD DEVICE CONTROL" and press the TRIGGER.

```
DIAGNOSTIC MONITORING TEST RESULTS
PENDING TROUBLE CODES
ON BOARD DEVICE CONTROL
ON BOARD SYSTEM READINESS
EVPANDED DIAGNOSTIC PROTOCOL
SELECT ITEM AND PRESS TRIGGER TO START
```

X5U101WBI

9. Press CANCEL two times.
10. Select "DIAGNOSTIC DATA LINK" and press the TRIGGER.

```
VEHICLE & ENGINE SELECTION
DIAGNOSTIC DATA LINK
VIEW RECORDER AREAS
DIGITAL MEASUREMENT SYSTEM
GENERIC OBD II FUNCTIONS
SELECT ITEM AND PRESS TRIGGER TO START
```

X5U101WBJ

11. Select "PCM – POWERTRAIN CONTROL MODULE" and press the TRIGGER.

```
PCM - POWERTRAIN CONTROL MODULE
ABS - ANTILOCK BRAKE MODULE
CCM - CRUISE CONTROL MODULE
SELECT ITEM AND PRESS TRIGGER TO START
```

X5U101WBK

12. Select "PID/DATA MONITOR AND RECORD" and press the TRIGGER.

```
DIAGNOSTIC TEST MODE
PID / DATA MONITOR AND RECORD
SIMULATION TEST
DIAGNOSTIC SUPPORT PROCEDURE
DIAGNOSTIC TROUBLE CODE LIBRARY
SELECT ITEM AND PRESS TRIGGER TO START
```

X5U101WBL

13. Press Number 5 under CLEAR to clear previously selected PIDs.

```
PCM 00        1GR    A/C SW   B+2
              2GR    ALTF     BARO
              3GR    ALTT V   BARO V
TOTAL=00      4GR    ATFT V   BRK SW
              A/C RLY B+      CDCV
                     CLEAR
```

X5U101WBM

14. Turn the menu dial clockwise or counterclockwise to highlight the "FTP" and press TRIGGER.

```
PCM 01        CHRGLMP  FANC    FTL V
              P SW     FANN    * FTP
              ECT      FHO2S   FTP V
TOTAL=01      ECT V    FHO2SH  IACV
              EGRBV    FP RLY  IAT
                     CLEAR   START
```

X5U101WBN

15. Press the Number 7 under STRAT to view PIDs.

```
FTP      0.0 Hg        IG ON    0.0 - 1.0
                       IDLE     0.0 - 1.0
PRESS TRIGGER TO CAPTURE DATA
```

X5U101WBO

16. Apply vacuum to 1.7 kPa {13 mmHg, 0.5 inHg} and they should remain at the specified readings for a minimum of 2 minutes.

```
FTP      -0.5 Hg       IG ON    0.0 - 1.0
                       IDLE     0.0 - 1.0
PRESS TRIGGER TO CAPTURE DATA
```

X5U101WBP

17. Return to the Diagnostic Trouble Code Inspection Procedures, and answer questions.

Inspection from charcoal canister to purge solenoid valve

1. Inspect for loose and wrongly connected hoses between the charcoal canister and the purge solenoid valve refer to "01–16 Evaporative Emission Control System Components Location".
2. Disconnect the vacuum hose between the charcoal canister and the catch tank from the charcoal canister.
3. Insert hose on the vacuum pump.
4. Apply vacuum to 3.3 kPa {25 mmHg, 1.0 inHg} and they should remain at the specified readings for a minimum of 2 minutes.
5. Return to the Diagnostic Trouble Code Inspection Procedures, and answer questions.

Purge Control Inspection

1. Start the engine.
2. Disconnect the vacuum hose between the purge solenoid valve and the charcoal canister.
3. Put a finger to the purge solenoid valve and verify that there is no vacuum applied when the engine is cold.
4. If there is a vacuum, inspect the following.
   - Inspect wiring harness between purge solenoid valve and PCM terminal
   - Inspect purge solenoid valve
5. Warm up the engine to the normal operating temperature.
6. Stop the engine.
7. Connect the NGS tester to DLC-2.

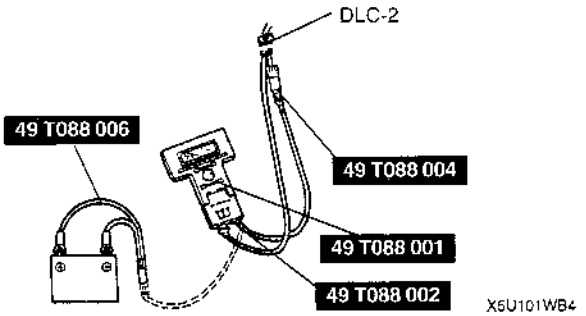

8. Turn the ignition switch to ON.
9. Select "PID/DATA MONITOR AND RECORD" and press TRIGGER.
10. Select "ECT" and press TRIGGER, then verify that the engine coolant temperature is above 60 °C {140 °F}.
11. Press START.
12. If the NGS tester indicates below 60 °C {140 °F}, inspect the engine coolant temperature sensor.
13. Select "SIMULATION TEST" and press TRIGGER.
14. Select "PRG V" and press TRIGGER.
15. Press START.
16. Increase the duty valve of the purge solenoid valve to 50% and inspect if the operation sound of the valve is heard.
    (1) If the operation sound is heard, inspect the loose or damaged vacuum hose. (Intake manifold—purge solenoid valve—charcoal canister)
    (2) If the operation sound is not heard, inspect the purge solenoid valve.

EGR Control Inspection

1. Verify that EGR valve operation (initial operation) sound is heard when the ignition switch is turned to ON.
2. If the operation sound is not heard, connect the NGS tester to DLC-2 and verify that the diagnostic trouble code No. P1496, P1497, P1498 or P1499 is shown. Carry out troubleshooting of code No. P1496, P1497, P1498 or P1499.
3. Start the engine and run it at idle.
4. Select the SIMULATION TEST function on the NGS display.

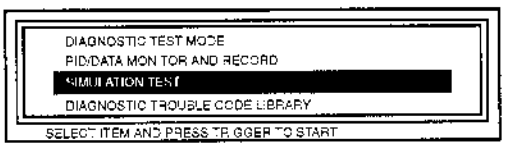

X5U101WBS

5. Increase the step value of EGR valve from 0 to 40 by using "SEGRP". Operate the EGR valve and inspect if the engine speed becomes unstable or the engine stalls.
6. If the engine speed will not change, do as follows.
   (1) Stop the engine.
   (2) Remove the EGR valve.
   (3) Connect the EGR valve connector.
   (4) Turn the ignition switch to ON.
   (5) Select the SIMULATION TEST function on the NGS display.

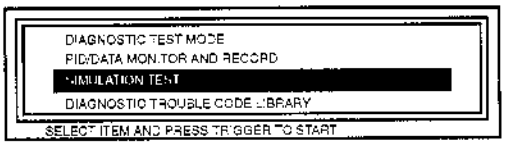

X5U101WBT

   (6) Increase the step value of EGR valve from 0 to 40 by using "SEGR P". Inspect the EGR operation.
      ① If the EGR valve is operated, clean the EGR valve and reinspect from step 3.
      ② If the EGR valve will not operate, replace the EGR valve and reinspect from step 3.
7. Warm up the engine to normal operating temperature.
8. On level ground, jack up the vehicle and support it evenly on safety stands or set the vehicle on the chassis roller.

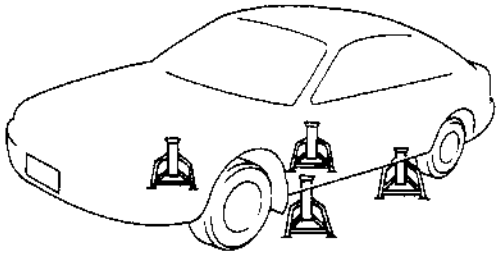

X5U101WBU

9. Select the PID/DATA MONITOR function on the NGS display.

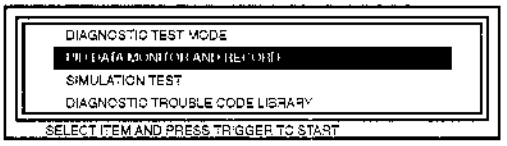

X5U101WBV

10. Select the following items.
    - SEGRP
    - RPM
    - VS
    - TP V
    - ECT V
11. Let the vehicle idle and verify that the SEGRP value is 0.
12. Depress the accelerator pedal and verify that the SEGRP value is increased.
13. If the SEGRP value will not increased, do as follows.
    (1) Verify that the TP V value is increased when the accelerator pedal is depressed.
    (2) Verify that the VS is increased when the tires are rotated.
    (3) Verify that the ECT V is within the specified value when the engine warms up. (Refer to 01–40 POWERTRAIN CONTROL MODULE (PCM) INSPECTION.)
    (4) If not as specified, inspect the following.
    - Throttle position sensor
    - Vehicle speed sensor
    - Engine coolant temperature sensor
    - Wiring harnesses and connectors (PCM—throttle position sensor, PCM—vehicle speed sensor, PCM—engine coolant temperature sensor)
14. Stop the vehicle and verify that the SEGRP is returned 0.

Main Relay Operation Inspection

1. Verify that the main relay clicks when the ignition switch is turned to ON and off.
2. If there is no operation sound, inspect the following.
    - Main relay
    - Harness and connector between ignition switch and main relay
    - Main relay ground

Ignition Timing Control Inspection

1. Connect a timing light to the engine.
2. Crank the engine.
3. Verify that the timing mark (yellow) on the crankshaft pulley and the mark on the timing belt cover are aligned.

    Specification
    BTDC 9°—11° (10° ± 1°)

4. Increase engine speed and verify ignition timing is advanced.

A/C Cut Control Inspection

1. Start the engine.
2. Turn the A/C switch and fan switch on.
3. Verify that the A/C compressor magnet clutch actuates.
4. If is does not actuate, go to symptom troubleshooting No.23 "A/C does not work".
5. Fully open the throttle valve and verify that the A/C compressor magnet clutch does not actuate for 3—6 seconds.
6. If it actuates, inspect the following.
    (1) Connect the NGS tester to DLC-2.

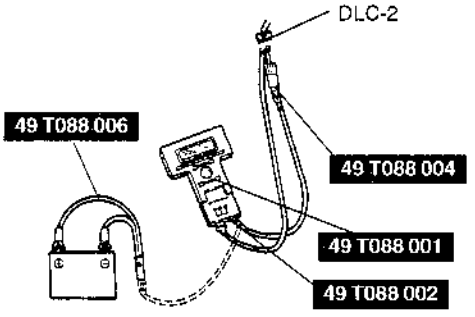

X5U101WBR

    (2) Turn the A/C switch off.
    (3) Turn the ignition switch to ON.
    (4) Select "SIMULATION TEST" and press TRIGGER.
    (5) Select "IG ON TEST" and press TRIGGER.
    (6) Select "A/C RLY" and press TRIGGER.
    (7) Press START.
    (8) Turn the A/C relay from off to on and inspect if the operation sound of the relay is heard.
    (9) If the operation sound is heard, inspect TP V PID.
    (10) If the operation sound is not heard, inspect following.
    - A/C relay
    - Open or short to ground circuit in wiring harness and connectors (Main relay—A/C relay—PCM terminal 1S.)
    - A/C related parts

Cooling Fan Control System Inspection

Cooling fan operation

Engine condition	Cooling fan relay	Condenser fan relay
Engine coolant temperature below 97 °C {207 °F}	OFF	OFF
Engine coolant temperature above 97 °C {207 °F}	ON	OFF
Engine coolant temperature above 108 °C {226 °F}	ON	OFF
Air conditioning switch ON	ON	ON
Engine coolant temperature sensor malfunction	ON	ON

Cooling fan

1. Verify the engine is cold.
2. Turn the ignition switch to ON.
3. Verify the cooling fan is not operating.
4. If the cooling fan is operating:
   (1) Connect the NGS tester to DLC-2.
   (2) Select the "SIMULATION TEST". Then, select "FAN2" in "IG ON TEST".
   (3) Send verify "OFF" and the cooling fan is OFF.
   (4) If the cooling fan is ON inspect:
   - Cooling fan relay stuck in closed position.
   - Short to ground circuit between cooling fan relay and PCM terminal R.
   - Short to power in circuit between cooling fan relay.
   - DTCs for ECT sensor.
   - P0117, P0118, P0125

   (5) If the cooling fan is OFF, inspect the following.
   - Short to ground circuit between A/C switch and PCM terminal P.
   - DTC for ECT sensor.
   - P0117, P0118, P0125
5. Start the engine.
6. Verify that the cooling fan is operating when engine is hot.
7. If the cooling fan does not operate, do as follows.
   (1) Connect the **SSTs** (NGS tester) to the DLC-2.
   (2) Select "SIMULATION TEST" mode.
   (3) Select "IG ON TEST" mode.
   (4) Select "FAN2".
   (5) Press "Start".
   (6) If the cooling fan operates, inspect the ECT sensor DTCs.
   - P0117, P0118, P0125

   (7) If the cooling fan does not operate, do as follows.
   ① Select "FAN2". Operate cooling fan by selecting "Start", and verify that operation sound is heard from the cooling fan relay.
   ② If the operation sound is heard, inspect the wiring harnesses and connectors and cooling fan motor.
   ③ If operational sound is heard, inspect cooling fan relay and open circuit in wiring harnesses and connectors.
8. Turn the A/C switch and fan switch on.
9. Verify the cooling fan is operating.
10. If fan does not operate, inspect A/C system.

Condenser fan relay

1. Verify that A/C switch and fan switch are off.
2. Start the engine and let it idle.
3. Verify that the condenser fan is not operating.
4. If condenser fan is operating, inspect:
   - Condenser fan relay for stuck in closed position
   - Short to power in circuit between condenser fan relay and condenser fan
   - Short to ground in circuit between A/C pressure switch and PCM terminal 1P
   - Short to ground circuit between condenser fan relay and PCM terminal I (short circuit)
5. Turn the A/C switch and fan switch on.
6. Verify that the condenser fan is operating and operating sound of A/C compressor magnetic clutch is heard.
7. Turn the A/C switch and fan switch off.
8. If the condenser fan does not operate but operating sound of A/C compressor magnetic clutch is heard, inspect as follows:
   - Open circuit between ignition switch and condenser fan relay
   - Open circuit between battery and condenser fan relay
   - Open circuit between condenser fan relay and PCM terminal 1I
   - Open circuit between condenser fan relay and condenser fan motor or fan motor ground
   - Condenser fan relay stuck open
   - Condenser fan motor
9. If both condenser fan and A/C compressor do not operate, inspect:
   - TP V PID
   - A/C system

Spark Test

1. Disconnect the negative battery cable.
2. Disconnect the fuel pump relay connector.
3. Verify that each high-tension lead and connector is connected properly.
4. Inspect the ignition system in the following procedure.

Warning

- **High voltage in the ignition system can cause strong electrical shock which can result in serious injury. Avoid direct contact to the vehicle body during the following spark test.**

STEP	INSPECTION		ACTION
1	Remove high-tension lead from spark plug. Hold high-tension lead with installed pliers 5—10 mm {0.20—0.39 in} from ground. Turn ignition switch to START and verify that there is a strong blue spark. (Inspect each cylinder)	Yes	Ignition system is okay.
		No	If some cylinders do not spark, go to step 2. If all cylinders do not spark, go to step 3.
2	Is high-tension lead resistance correct?	Yes	Inspect for crack or damage of high-tension lead and ignition coil.
		No	Replace the high-tension lead.
3	Does PCM or ignition coil connector have poor connection?	Yes	Repair or replace connector.
		No	Go to next step.
4	Is ignition coil winding resistance okay?	Yes	Go to next step.
		No	Replace ignition coil.
5	Are following parts okay? • Crankshaft position sensor and crankshaft pulley also, inspect gap • PCM terminal 3G/3H voltage	Yes	Inspect for open or short in wiring harness and connectors of CKP sensor.
		No	Repair or replace.

Fuel Injector Operation Inspection

STEP	INSPECTION		ACTION
1	While cranking engine, inspect for fuel injector operation sound at each cylinder by using a soundscope. Is operation sound heard?	Yes	Fuel injector operation is okay.
		No	If operation sound is not heard from all cylinders, go to step 2. If operation sound is not heard from some cylinders, go to step 3.
2	Carry out main relay operation. Is main relay operation normal?	Yes	Inspect following: • Fuel injector power system related wiring harnesses and connectors • PCM connectors • PCM terminal voltage • Fuel injector ground and related wiring harness and connectors
		No	Repair or replace.
3	Change fuel injector connector of not operating fuel injector and operating fuel injector. Is operation sound heard?	Yes	Go to next step.
		No	Replace the fuel injector.
4	Are wiring harnesses and connectors of operating fuel injector okay? (Operating or not operating)	Yes	Repair or replace.
		No	Inspect PCM terminal voltage fuel injector signal.

Fuel Cut Control Inspection

1. Warm up the engine and let it idle.
2. Turn off the electrical loads and A/C switch.
3. Connect the NGS tester to DLC-2.

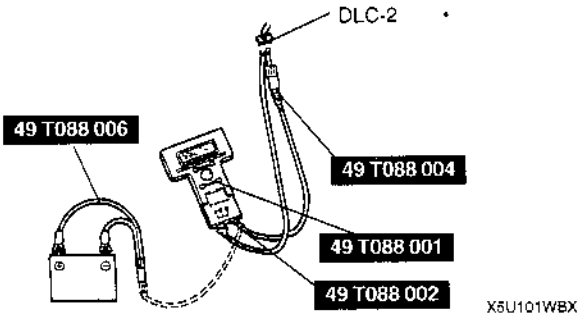

4. Select "PID/DATA MONITOR AND RECORD" and press TRIGGER.
5. Select "RPM" and "INJ". Then, press TRIGGER.
6. Press START.
7. Monitor both PIDs while performing the following steps:
   (1) Depress the accelerator pedal and increase the engine speed to 2,500 rpm.
   (2) Release the accelerator pedal (brake pedal is not depressed) and verify that the fuel injector duration time is 0 msec., and 2—5 msec. when the engine speed drops below 1,000 rpm.

01–01C TROUBLESHOOTING [CRUISE CONTROL SYSTEM]

CRUISE CONTROL SYSTEM ON-BOARD DIAGNOSIS

X5U101W9A

Outline

- There are two on-board diagnostic functions: Operation Mode, which inspects for and indicates correct operation of the input signals to the control module, and Condition Detection Mode, which indicates troubles in the system
- The two functions can be done by using either of the following methods:
  (1) Verifying the flashing pattern of the cruise set indicator light in the instrument cluster.
  (2) Verifying the output of the data link connector by using the **SST** (NGS set).

Inspection Order

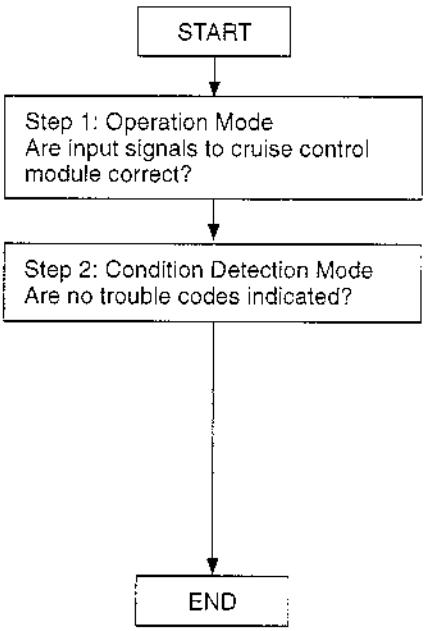

X5U101WV0

Inspection of Diagnostic Trouble Codes for Operation Mode

Note

- If an Operation Mode is not indicated, the following may be the cause of the malfunction.
  1. Cruise control switch (RESUME/ACCEL switch)
  2. Cruise control main switch
  3. Cruise control module
  4. Open or short circuit in wiring harness

Using the cruise set indicator light

1. Turn the ignition switch to ON.
2. Verify that the cruise control main switch is off.
3. Turn and hold the RESUME/ACCEL switch on then turn on the cruise control main switch to activate system inspection. (The cruise set indicator light will illuminate for **3 seconds**.)

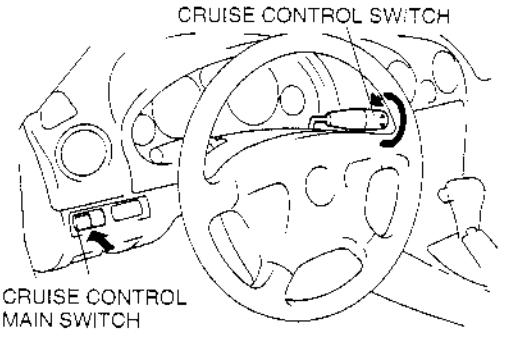

X5U101WV1

4. Operate each switch as described in the operation code list and note the operation code list pattern. If the cruise set indicator light does not flash, inspect the corresponding system area.
5. The operation mode is canceled by turning the ignition switch to LOCK or turning off the cruise control main switch.

Using the SST (NGS set)
New generation star (NGS) tester hookup procedure

Note
- Verify that ignition switch is at LOCK.

1. Insert the interface module and program card into the **SST** (NGS tester) control unit.
2. Plug the NGS OBD II adapter into the interface module and the connector into the data link connector (DLC) located in the engine compartment via the Super MECS Adapter.
3. Plug the **SST** (NGS tester) power cable into the cigarette lighter or use Battery Hookup Adapter.

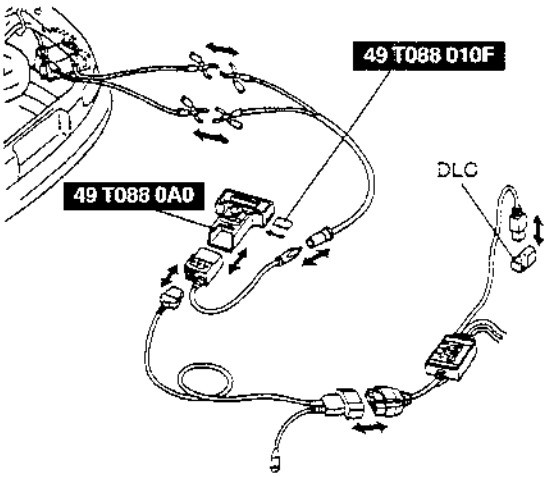

X5U101WV2

Reading DTCs Procedure

Note
- In case the OBD test is performed under the following conditions or NGS tester isn't operated properly, **NO CODES RECEIVED** may be indicated even if the cruise control module sends any DTCs.
  1. Open or short circuit in wiring harness connected with the terminal FSC of the data link connector
  2. Poor positive battery voltage

1. Perform the necessary vehicle preparation and visual inspection. Hookup the **SST** (NGS tester) to the vehicle. (Refer to Using the **SST** (NGS set), New generation star (NGS) tester hookup procedure.)
2. Move the cursor to **VEHICLE & ENGINE SELECTION** in the main menu screen. Press TRIGGER to enter this selection.

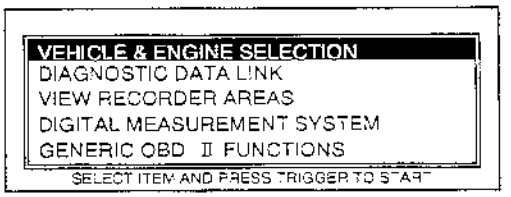

X5U101WV3

3. Move the cursor to **SELECT NEW VEHICLE YEAR & MODEL**. Press TRIGGER to enter this selection.

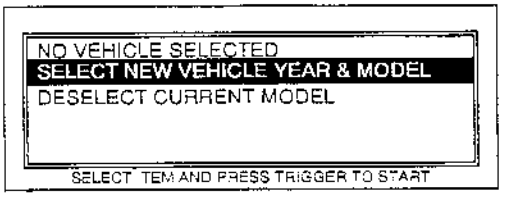

X5U101WV4

4. Move the cursor to **1999 — VIN # 10:X**. Press TRIGGER to enter this selection.

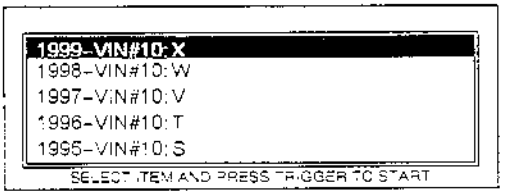

X5U101WV5

5. Move the cursor to appropriate model. Press TRIGGER to enter this selection.
6. The vehicle selection screen showing the selected vehicle will be displayed. Move the cursor to the vehicle selected. Press TRIGGER to enter this selection.
7. Move the cursor to **DIAGNOSTIC DATA LINK** in the main menu screen. Press TRIGGER to enter this selection.

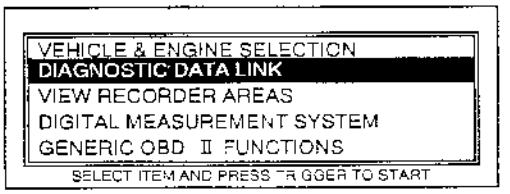

X5U101WV6

8. Move the cursor to **CCM — CRUISE CONTROL MODULE**. Press TRIGGER to enter this selection.

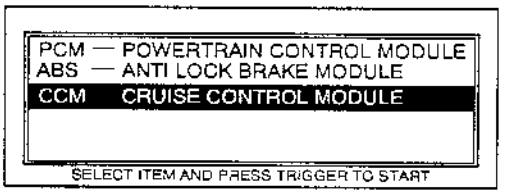

X5U101WV7

9. Move the cursor to **DIAGNOSTIC TEST MODES.** Press TRIGGER to enter this selection.

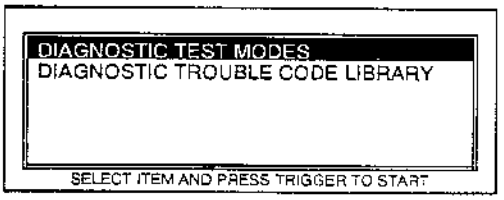

X5U101WV8

10. Move the cursor to **CRUISE CONTROL INPUT SW SELF-TEST**. Press TRIGGER to enter this selection.

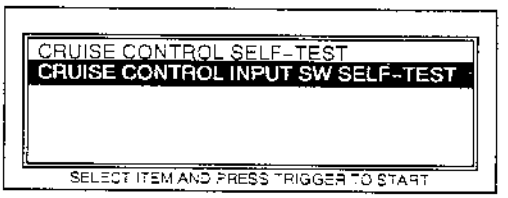

X5U101WV9

11. Press the START button.
12. Follow the operating instructions from the menu.

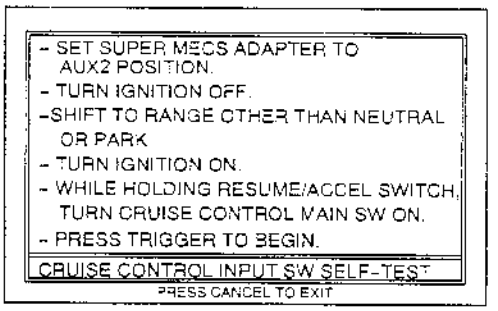

X5U101WVA

13. Operate each switch as described in the operation code list and note the operation code pattern. If a diagnostic trouble code is not indicated, inspect the corresponding system area.
14. Remove the **SST** (NGS set).
15. The Operation Mode is canceled by turning the ignition switch to LOCK or turning off the cruise control main switch.

Operation code list

Operation		DTC	Output pattern	Display on the NGS	Diagnosed circuit	
Turn SET/COAST switch on		21	 X5U101WV6	SET/COAST SW-PRESS	Cruise control switch (SET/COAST switch)	
Turn RESUME/ACCEL switch on		22	 X5U101WVC	RESUME/ACCEL SW-PRESS	Cruise control switch (RESUME/ACCEL switch)	
Depress brake pedal		31	 X5U101WVD	BRAKE PEDAL-DEPRESS	Brake switch	
AT	Shift selector lever to P or N range	35	 X5U101WVE	P OR N RANGE/NEUTRAL POSITION-SHIFT	AT	Transmission range switch
MT	Depress clutch pedal				MT	Clutch switch
Drive vehicle above 40 km/h (25 mph)		37	 X5U101WVF	VEHICLE SPEED-ABOVE 40 KM/H (25 MPH)	Vehicle speed sensor	

Inspection of diagnostic trouble codes

DTC 21	CRUISE CONTROL SWITCH (SET/COAST SWITCH)
DETECTION CONDITION	Resistance detected between terminal N and ground is other than 240 Ω.
POSSIBLE CAUSE	• Cruise control module malfunction • Cruise control switch (wiper lever) malfunction

STEP	INSPECTION		ACTION
—	Remove lower panel. Turn ignition switch to ON. Turn cruise control main switch on. Turn SET/COAST switch on. Is voltage at terminal AE of combination switch connector **approximately 1.5 V**?	Yes	Replace cruise control module. ☞ 01–20 CRUISE CONTROL MODULE REMOVAL/INSTALLATION
		No	Replace wiper lever. ☞ 09–18 COMBINATION SWITCH DISASSEMBLY/ASSEMBLY

COMBINATION SWITCH CONNECTOR

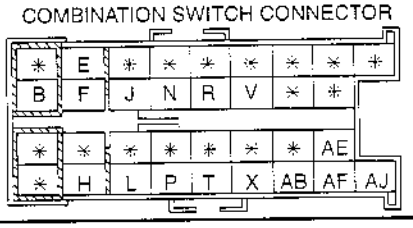

X5U101WVG

DTC 22	CRUISE CONTROL SWITCH (RESUME/ACCEL SWITCH)
DETECTION CONDITION	Resistance detected between terminal N and ground is other than 910 Ω.
POSSIBLE CAUSE	Cruise control module malfunction

STEP	INSPECTION	ACTION
—	—	Replace cruise control module. ☞ 01–20 CRUISE CONTROL MODULE REMOVAL/INSTALLATION

DTC 31	BRAKE SWITCH
DETECTION CONDITION	Voltage detected at terminal M is not approximately 12 V or voltage detected at terminal O is not approximately 0 V.
POSSIBLE CAUSE	• Burnt STOP 15 A fuse • Cruise control module malfunction • Brake switch malfunction • Malfunction in wiring harness between STOP 15 A fuse and brake switch • Malfunction in wiring harness between cruise control module and brake switch

STEP	INSPECTION		ACTION
1	Does brake light illuminate when brake pedal is depressed?	Yes	Go to step 6.
		No	Go to next step.
2	Is STOP 15 A fuse okay?	Yes	Go to next step.
		No	Replace fuse after checking and repairing wiring harness.
3	Depress brake pedal. Is voltage at terminal 1B of brake switch connector **approximately 12 V**?	Yes	Go to step 5.
		No	Go to next step.
4	Is voltage at terminal 1A of brake switch connector **approximately 12 V**?	Yes	Replace brake switch. ☞ 04–11 BRAKE PEDAL REMOVAL/INSTALLATION
		No	Repair wiring harness. (STOP 15 A fuse—Brake switch)

STEP	INSPECTION		ACTION
5	Remove lower panel. Remove cruise control module with connector connected. ☞ 01–20 CRUISE CONTROL MODULE REMOVAL/INSTALLATION Depress brake pedal. Is voltage at terminal M of cruise control module connector **approximately 12 V**?	Yes	Replace cruise control module. ☞ 01–20 CRUISE CONTROL MODULE REMOVAL/INSTALLATION
		No	Repair wiring harness. (Cruise control module—Brake switch)
6	Remove lower panel. Remove cruise control module with connector connected. ☞ 01–20 CRUISE CONTROL MODULE REMOVAL/INSTALLATION Depress brake pedal. Is voltage at terminal M of cruise control module connector **approximately 12 V**?	Yes	Go to next step.
		No	Repair wiring harness. (Cruise control module—Brake switch)
7	Turn ignition switch to ON. Turn cruise control main switch on. Depress brake pedal. Is voltage at terminal O of cruise control module connector **approximately 0 V**?	Yes	Replace cruise control module. ☞ 01–20 CRUISE CONTROL MODULE REMOVAL/INSTALLATION
		No	Replace brake switch. ☞ 04–11 BRAKE PEDAL REMOVAL/INSTALLATION

BRAKE SWITCH CONNECTOR

CRUISE CONTROL MODULE CONNECTOR

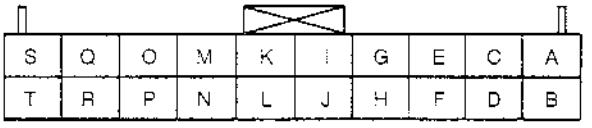

X5U101WVR

DTC 35	CLUTCH SWITCH (AT : TRANSMISSION RANGE SWITCH)
DETECTION CONDITION	Voltage detected at terminal J is not approximately 0 V.
POSSIBLE CAUSE	• Cruise control module malfunction • Clutch switch (AT: transmission range switch) malfunction • Malfunction in wiring harness between clutch switch (AT: transmission range switch) and ground • Malfunction in wiring harness between cruise control module and clutch switch (AT: transmission range switch)

STEP	INSPECTION		ACTION
1	Does vehicle have MT?	Yes	Go to next step.
		No	Go to step 6.
2	Inspect clutch switch. ☞ 01–40 CLUTCH SWITCH INSPECTION Is clutch switch okay?	Yes	Go to next step.
		No	Replace clutch switch. ☞ 05–10 CLUTCH PEDAL REMOVAL/INSTALLATION
3	Disconnect clutch switch connector. Is there continuity between terminal B of clutch switch connector and ground?	Yes	Go to next step.
		No	Repair wiring harness. (Clutch switch—GND)
4	Turn ignition switch to ON. Turn cruise control main switch on. Keep clutch pedal released. Is voltage at terminal A of clutch switch connector **approximately 12 V**?	Yes	Replace cruise control module. ☞ 01–20 CRUISE CONTROL MODULE REMOVAL/INSTALLATION
		No	Go to next step.
5	Remove lower panel. Remove cruise control module with connector connected. ☞ 01–20 CRUISE CONTROL MODULE REMOVAL/INSTALLATION Is voltage at terminal J of cruise control module connector **approximately 12 V**?	Yes	Repair wiring harness. (Cruise control module—Clutch switch)
		No	Replace cruise control module. ☞ 01–20 CRUISE CONTROL MODULE REMOVAL/INSTALLATION

STEP	INSPECTION		ACTION
6	Inspect transmission range switch. ☞ 05–13 TRANSMISSION RANGE SWITCH INSPECTION Is transmission range switch okay?	Yes	Go to next step.
		No	Replace transmission range switch. ☞ 05–13 TRANSMISSION RANGE SWITCH REMOVAL/INSTALLATION
7	Disconnect transmission range switch connector. Is there continuity between terminal C of transmission range switch connector and ground?	Yes	Go to next step.
		No	Repair wiring harness. (Transmission range switch—GND)
8	Turn ignition switch to ON. Turn cruise control main switch on. Shift selector lever to D or R range. Is voltage at terminal D of transmission range switch connector **approximately 12 V**?	Yes	Replace cruise control module. ☞ 01–20 CRUISE CONTROL MODULE REMOVAL/INSTALLATION
		No	Go to next step.
9	Remove lower panel. Remove cruise control module with connector connected. ☞ 01–20 CRUISE CONTROL MODULE REMOVAL/INSTALLATION Is voltage at terminal J of cruise control module connector **approximately 12 V**?	Yes	Repair wiring harness. (Cruise control module—Transmission range switch)
		No	Replace cruise control module. ☞ 01–20 CRUISE CONTROL MODULE REMOVAL/INSTALLATION

CLUTCH SWITCH CONNECTOR

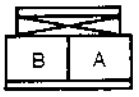

TRANSMISSION RANGE SWITCH CONNECTOR

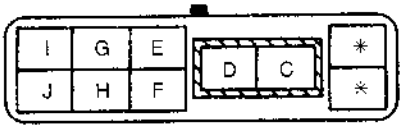

CRUISE CONTROL MODULE CONNECTOR

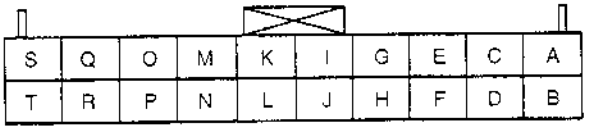

X5U101WVJ

DTC 37	VEHICLE SPEED SENSOR
DETECTION CONDITION	Voltage detected at terminal P is not 0 V ⇔ 5 V.
POSSIBLE CAUSE	• Cruise control module malfunction • Instrument cluster malfunction • Malfunction in wiring harness between cruise control module and instrument cluster

STEP	INSPECTION		ACTION
1	Disconnect instrument cluster connector. Remove lower panel. Disconnect cruise control module connector. Is there continuity between terminal P of cruise control module and terminal 2L of instrument cluster.	Yes	Go to next step.
		No	Repair wiring harness. (Cruise control module—Instrument cluster)
2	Turn ignition switch to ON. Turn cruise control main switch on. Rotate rear tires. Is voltage at terminal 2L of instrument cluster connector **0 ⇔ 5 V**?	Yes	Replace cruise control module. ☞ 01–20 CRUISE CONTROL MODULE REMOVAL/INSTALLATION
		No	Replace instrument cluster. ☞ 09–22 INSTRUMENT CLUSTER REMOVAL/INSTALLATION

INSTRUMENT CLUSTER CONNECTOR

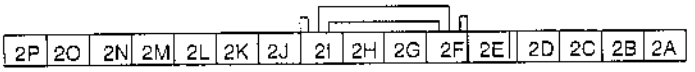

CRUISE CONTROL MODULE CONNECTOR

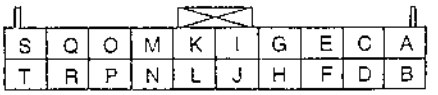

X5U101WVK

Inspection of Diagnostic Trouble Codes for Condition Detection Mode
Using the cruise set indicator light

Note
- If the RESUME/ACCEL switch on the cruise control switch is malfunctioning, the cruise set indicator light will not give a correct indication when you inspect the system. Use the **SST** (NGS set) to determine the cause of the malfunction.

1. Drive the vehicle at over **16 km/h {10 mile/h}**.
2. Operate each of the cruise control switches.
3. Stop the vehicle and let it idle.
4. Turn on the cruise control main switch.
5. Turn and hold the RESUME/ACCEL switch on for at least **3 seconds**. The cruise set indicator light will illuminate for **3 seconds**, and then go off for at least **2 seconds**. Thus, the condition detection mode begins.

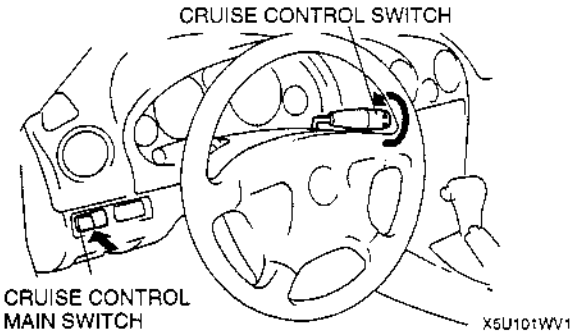

6. If a diagnostic trouble code is indicated, inspect the corresponding system area.
7. The condition detection mode is canceled by turning the ignition switch to LOCK or turning off the cruise control main switch.

Using the SST (NGS set)
New generation star (NGS) tester hookup procedure

Note
- Verify that ignition switch is at LOCK.

1. Insert the interface module and program card into the **SST** (NGS tester) control unit.
2. Plug the NGS OBD II adapter into the interface module and the connector into the data link connector (DLC) located in the engine compartment via the Super MECS Adapter.
3. Plug the **SST** (NGS tester) power cable into the cigarette lighter or use a battery hookup adapter.

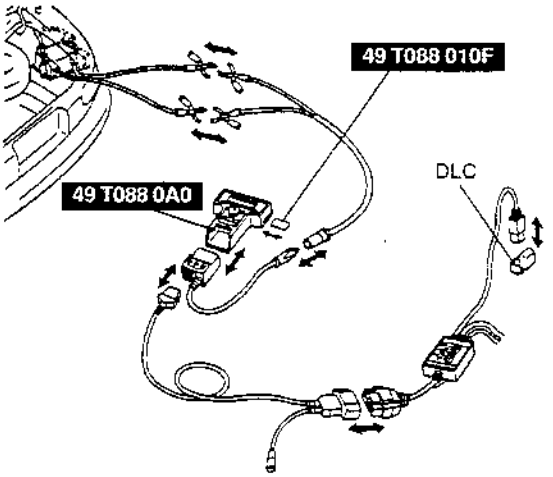

X5U101WV2

Reading DTCs Procedure

Note
- In case the OBD test is performed in the following conditions or NGS tester isn't operated properly, **NO CODES RECEIVED** may be indicated even if the cruise control module sends any DTCs.
  1. Open or short circuit in wiring harness connected with the terminal FSC of the data link connector
  2. Poor positive battery voltage

1. Perform the necessary vehicle preparation and visual inspection. Hookup the **SST** (NGS tester) to the vehicle. (Refer to Using the **SST** (NGS set), New generation star (NGS) tester hookup procedure.)
2. Move the cursor to **VEHICLE & ENGINE SELECTION** in the main menu screen. Press TRIGGER to enter this selection.

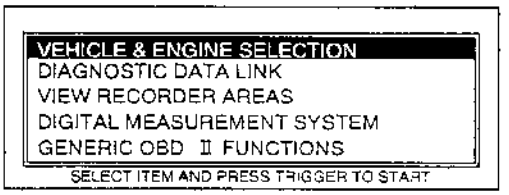

X5U101WV3

3. Move the cursor to **SELECT NEW VEHICLE YEAR & MODEL**. Press TRIGGER to enter this selection.

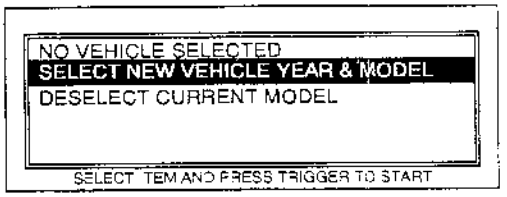

X5U101WV4

4. Move the cursor to **1999 — VIN # 10:X**. Press TRIGGER to enter this selection.

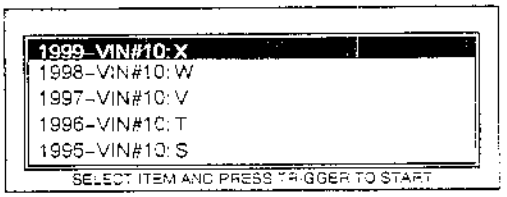

X5U101WV5

5. Move the cursor to appropriate model. Press TRIGGER to enter this selection.
6. The vehicle selection screen showing the selected vehicle will be displayed. Move the cursor to the vehicle selected. Press TRIGGER to enter this selection.
7. Move the cursor to **DIAGNOSTIC DATA LINK** in the main menu screen. Press TRIGGER to enter this selection.

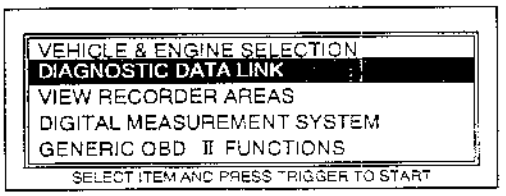

X5U101WV6

8. Move the cursor to **CCM—CRUISE CONTROL MODULE**. Press TRIGGER to enter this selection.

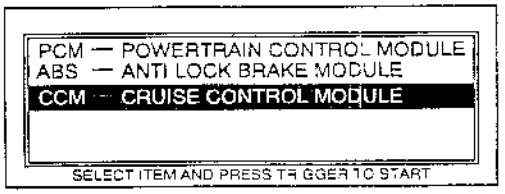

X5U101WV7

9. Move the cursor to **DIAGNOSTIC TEST MODES**. Press TRIGGER to enter this selection.

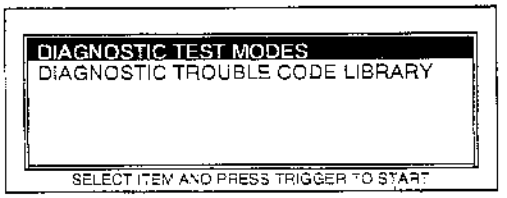

X5U101WV8

10. Move the cursor to **CRUISE CONTROL SELF-TEST**. Press TRIGGER to enter this selection.

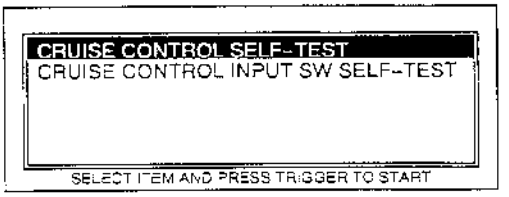

X5U101WV9

11. Press the START button.
12. Follow the operating instructions from the menu.

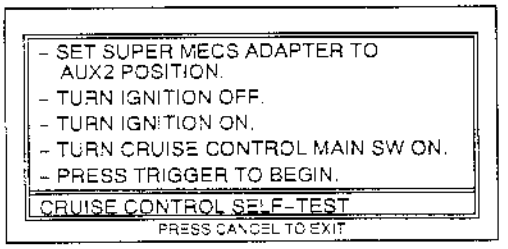

X5U101WVM

13. If a diagnostic trouble code is not indicated, inspect the corresponding system area.
14. Remove the **SST** (NGS set).
15. The condition detection mode is canceled by turning the ignition switch to LOCK, turning off the cruise control main switch or driving the vehicle at over **16 km/h {10 mile/h}**.

Condition code list

DTC	Output pattern	Display on the NGS	Diagnosed circuit
01	 X5U101WVN	ACTUATOR OR STOPLIGHT SW-DEFECT	Cruise actuator
05	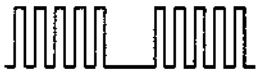 X5U101WVP	STOP FUSE OR WIRING-BLOWN, DEFECT	Brake switch
07	 X5U101WVQ	STOPLIGHT SWITCHES-DEFECT	Brake switch
11	 X5U101WVR	SET/COAST SW-DEFECT (ALWAYS ON)	Cruise control switch (SET/COAST switch)
12	 X5U101WVS	RESUME/ACCEL SW-DEFECT (ALWAYS ON)	Cruise control switch (RESUME/ACCEL switch)
15	 X5U101WVT	CRUISE CONTROL MODULE-DEFECT	Cruise control module

Note
- When two or more service codes are indicated, inspect the malfunction with the smallest number first.

Inspection of diagnostic trouble codes

DTC 01	CRUISE ACTUATOR
DETECTION CONDITION	Voltages detected at terminal A, B or C are not approximately 12 V.
POSSIBLE CAUSE	• Cruise control module malfunction • Cruise actuator malfunction • Malfunction in wiring harness between cruise control module and cruise actuator • Malfunction in wiring harness between cruise actuator and brake switch • Malfunction in wiring harness between cruise control module and brake switch

STEP	INSPECTION		ACTION
1	Are wiring harnesses between cruise control module and cruise actuator okay?	Yes	Go to next step.
		No	Repair wiring harness. (Cruise control module—Cruise actuator)
2	Disconnect cruise actuator connector. Turn ignition switch to ON. Turn cruise control main switch on. Is voltage at terminal C of cruise actuator connector **approximately 12 V**?	Yes	Go to step 6.
		No	Go to next step.
3	Is voltage at terminal 2B of brake switch connector **approximately 12 V**?	Yes	Repair wiring harness. (Cruise actuator—Brake switch)
		No	Go to next step.
4	Is voltage at terminal 2A of brake switch connector **approximately 12 V**?	Yes	Replace brake switch. ☞ 04–11 BRAKE PEDAL REMOVAL/INSTALLATION
		No	Go to next step.

STEP	INSPECTION		ACTION
5	Remove lower panel. Remove cruise control module with connector connected. ☞ 01–20 CRUISE CONTORL MODULE REMOVAL/INSTALLATION Is voltage at terminal H of cruise control module connector **approximately 12 V**?	Yes	Repair wiring harness. (Cruise control module—Brake switch)
		No	Replace cruise control module. ☞ 01–20 CRUISE CONTROL MODULE REMOVAL/INSTALLATION
6	Connect cruise actuator connector. Turn ignition switch to ON. Turn cruise control main switch on. Is voltage at terminal B of cruise actuator connector **approximately 12 V**?	Yes	Go to next step.
		No	Replace cruise actuator. ☞ 01–20 CRUISE ACTUATOR REMOVAL/INSTALLATION
7	Is voltage at terminal D of cruise actuator connector **approximately 12 V**?	Yes	Go to next step.
		No	Replace cruise actuator. ☞ 01–20 CRUISE ACTUATOR REMOVAL/INSTALLATION
8	Is voltage at terminal A of cruise actuator connector **approximately 12 V**?	Yes	Replace cruise control module. ☞ 01–20 CRUISE CONTROL MODULE REMOVAL/INSTALLATION
		No	Replace cruise actuator. ☞ 01–20 CRUISE ACTUATOR REMOVAL/INSTALLATION

BRAKE SWITCH CONNECTOR

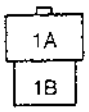

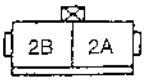

CRUISE ACTUATOR CONNECTOR

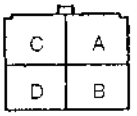

CRUISE CONTROL MODULE CONNECTOR

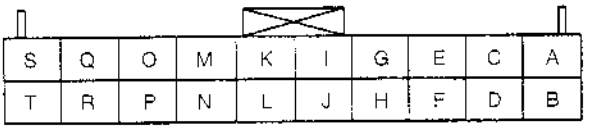

X5U131WVU

DTC 05	BRAKE SWITCH		
DETECTION CONDITION	Always approximately 0 V detected at terminal M		
POSSIBLE CAUSE	Cruise control module malfunction		
STEP	INSPECTION		ACTION
—	Was operation mode performed?	Yes	Perform operation mode on-board diagnostic again. Even if no malfunctions are detected in operation mode, if DTC 05 is indicated in condition detection mode on-board diagnostic, replace cruise control module. ☞ 01–20 CRUISE CONTROL MODULE REMOVAL/INSTALLATION
		No	Perform operation mode.

DTC 07	BRAKE SWITCH		
DETECTION CONDITION	• Voltages detected at terminal M or O are always approximately 12 V. • Voltage detected at terminal O is always approximately 0 V.		
POSSIBLE CAUSE	• Cruise control module malfunction • Brake switch malfunction • Malfunction in wiring harness between cruise control module and brake switch		
STEP	INSPECTION		ACTION
1	Disconnect brake switch connector. Is there continuity between terminal 1A and 1B of brake switch?	Yes	Replace brake switch. ☞ 04–11 BRAKE PEDAL REMOVAL/INSTALLATION
		No	Go to next step.

STEP	INSPECTION		ACTION
2	Remove lower panel. Remove cruise control module with connector connected. ☞ 01–20 CRUISE CONTROL MODULE REMOVAL/INSTALLATION Turn ignition switch to ON. Turn cruise control main switch on. Depress brake pedal. Is voltage at terminal M of cruise control module connector **approximately 0 V**?	Yes	Replace cruise control module. ☞ 01–20 CRUISE CONTROL MODULE REMOVAL/INSTALLATION
		No	Repair wiring harness. (Cruise control module—Brake switch)

BRAKE SWITCH CONNECTOR

CRUISE CONTROL MODULE CONNECTOR

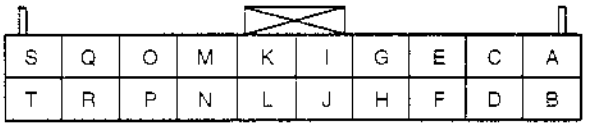

XSU01WVH

DTC 11	CRUISE CONTROL SWITCH (SET/COAST SWITCH)
DETECTION CONDITION	Resistance detected between terminal N and ground is always 240 Ω.
POSSIBLE CAUSE	Cruise control module malfunction

STEP	INSPECTION		ACTION
—	Was operation mode performed?	Yes	Perform operation mode on-board diagnostic again. Even if no malfunctions are detected in operation mode, if DTC 11 is indicated in condition detection mode on-board diagnositc, replace cruise control module. ☞ 01–20 CRUISE CONTROL MODULE REMOVAL/INSTALLATION
		No	Perform operation mode.

DTC 12	CRUISE CONTROL SWITCH (RESUME/ACCEL SWITCH)
DETECTION CONDITION	Resistance detected between terminal N and ground is always 910 Ω.
POSSIBLE CAUSE	Cruise control module malfunction

STEP	INSPECTION		ACTION
—	Was operation mode performed?	Yes	Perform operation mode on-board diagnostic again. Even if no malfunctions are detected in operation mode, if DTC 12 is indicated in condition detection mode on-board diagnostic, replace cruise control module. ☞ 01–20 CRUISE CONTROL MODULE REMOVAL/INSTALLATION
		No	Perform operation mode.

DTC 15	CRUISE CONTROL MODULE
DETECTION CONDITION	Malfunction in cruise control module circuit
POSSIBLE CAUSE	Cruise control module malfunction

STEP	INSPECTION	ACTION
—	—	Replace cruise control module. ☞ 01–20 CRUISE CONTROL MODULE REMOVAL/INSTALLATION

01–10 MECHANICAL

DRIVE BELT INSPECTION

Drive Belt Deflection Check

1. Verify the drive belt deflection when the engine is cold, or at least 30 minutes after the engine has stopped. Apply moderate pressure **98 N {10 kgf, 22 lbf}** midway between the specified pulleys.

Deflection

mm {in}

Drive belt	*New	Used	Limit
Generator	5.5—7.0 {0.22—0.27}	6.0—7.5 {0.24—0.29}	8.0 {0.31}
P/S, A/C, P/S+A/C	8.0—9.0 {0.32—0.35}	9.0—10.0 {0.36—0.39}	11.5 {0.45}

* : A belt that has been on a running engine for less than 5 minutes.

GENERATOR, P/S, P/S+A/C

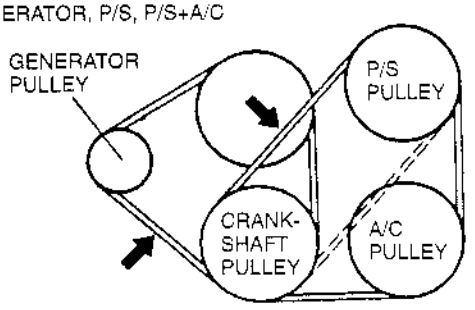

X5U110WA0

X5U110W01

A/C

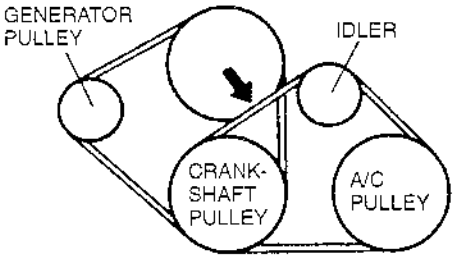

X5U110WA1

2. If the deflection is not within the specification, adjust it. (Refer to 01–10 DRIVE BELT ADJUSTMENT.)

Drive Belt Tension Check

1. Belt tension can be verified in place of belt deflection. Verify the drive belt tension when the engine is cold, or at least 30 minutes after the engine has stopped. Using the **SST**, verify the belt tension between any two pulleys.

Tension

N {kgf, lbf}

Drive belt	*New	Used	Limit
Generator	491—745 {50—76, 110—167}	491—706 {50—72, 110—158}	343 {35, 77}
P/S, A/C, P/S+A/C	491—588 {50—60, 110—132}	422—490 {43—50, 95—110}	245 {25, 55}

* : A belt that has been on a running engine for less than 5 minutes.

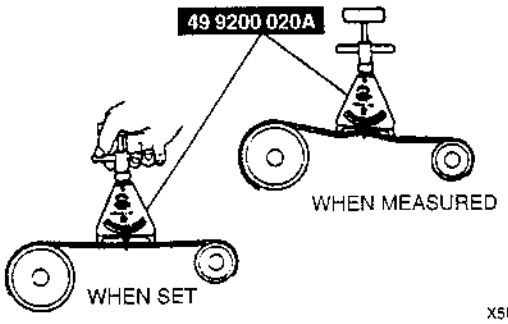

2. If the tension is not within the specification, adjust it. (Refer to 01–10 DRIVE BELT ADJUSTMENT.)

DRIVE BELT ADJUSTMENT

1. Loosen mounting bolts A, B and nut C.
2. Adjust the belt deflection or tension by turning the adjusting bolt D. (Refer to 01–10 DRIVE BELT INSPECTION.)
3. Tighten mounting bolts A, B and nut C.

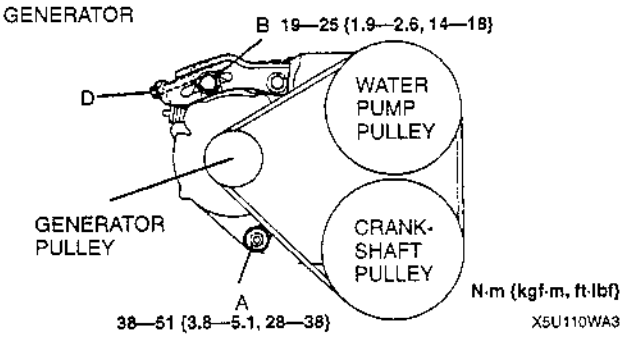

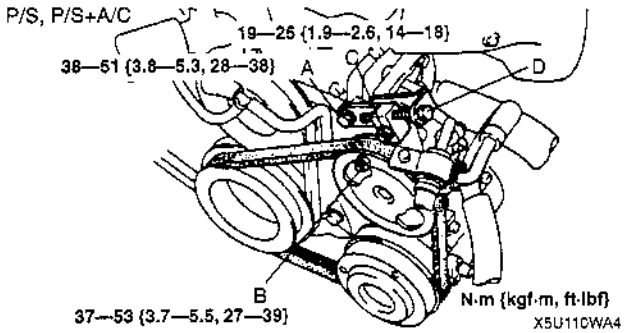

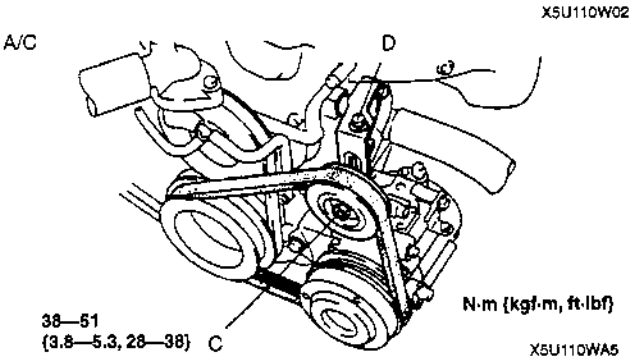

4. Verify the belt deflection or tension. (Refer to 01–10 DRIVE BELT INSPECTION.)

VALVE CLEARANCE INSPECTION

1. Remove the cylinder head cover.
2. Verify that the engine is in cold condition.
3. Measure the valve clearance.
   (1) Turn the crankshaft clockwise so that the No.1 piston is at TDC of the compression stroke.

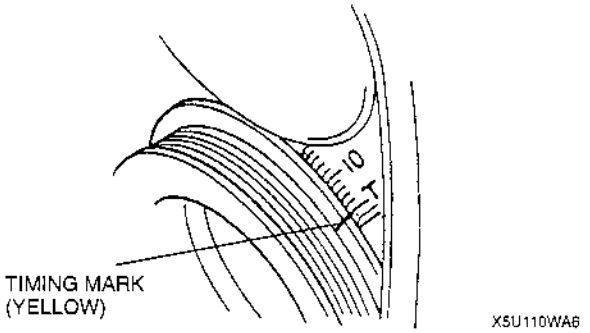

   (2) Measure the valve clearance at A in the figure.

Standard [Engine cold]
IN: 0.18—0.24 mm {0.008—0.009 in}
(0.21 ± 0.03 mm {0.008 ± 0.0012 in})
EX: 0.28—0.34 mm {0.012—0.013 in}
(0.31 ± 0.03 mm {0.012 ± 0.0012 in})

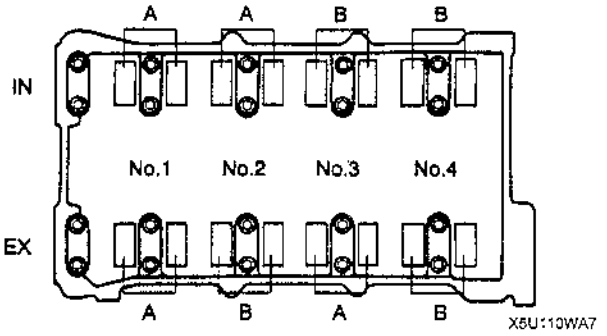

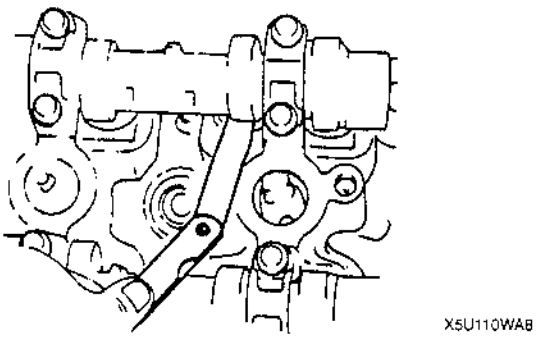

   (3) If the valve clearance exceeds the standard, replace the adjustment shim. (Refer to 01–10 VALVE CLEARANCE ADJUSTMENT.)
   (4) Turn the crankshaft 360° clockwise so that the No.4 piston is at TDC of the compression stroke.
   (5) Measure the valve clearance at B in the figure.

Standard [Engine cold]
IN: 0.18—0.24 mm {0.008—0.009 in}
(0.21 ± 0.03 mm {0.008 ± 0.0012 in})
EX: 0.28—0.34 mm {0.012—0.013 in}
(0.31 ± 0.03 mm {0.012 ± 0.0012 in})

   (6) If the valve clearance exceeds the standard, replace the adjustment shim. (Refer to 01–10 VALVE CLEARANCE ADJUSTMENT.)
4. Install the cylinder head cover. (Refer to 01–10 CYLINDER HEAD GASKET REPLACEMENT, Cylinder Head Cover Installation Note.)

VALVE CLEARANCE ADJUSTMENT

Perform this same procedure for all camshafts requiring valve clearance adjustment.

1. Turn the crankshaft clockwise so that the cams on the camshaft requiring valve clearance adjustment are positioned straight up.
2. Remove the camshaft cap bolts as necessary. Remove only one pair of cap bolts at a time. Install the cap bolts before removing the next pair.
   - A: For EX side No.1, 2, 3 cylinder adjustment shim removal.
   - B: For IN side No.1, 2, 3 cylinder adjustment shim removal.
   - C: For EX side No.2, 3, 4 cylinder adjustment shim removal.
   - D: For IN side No.2, 3, 4 cylinder adjustment shim removal.

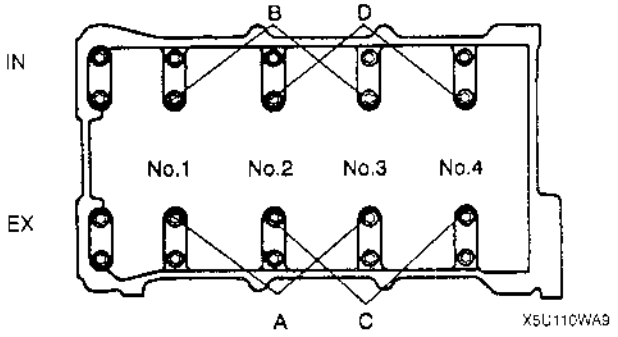

Note

- For EX side No.2, 3 cylinder adjustment shim removal, remove bolts either A or C.
- For IN side No.2, 3 cylinder adjustment shim removal, remove bolts either B or D.

3. Install the **SSTs** on the camshaft using the camshaft cap bolt holes.

Tightening torque
11.3—14.2 N·m
{115—145 kgf·cm, 100—125 in·lbf}

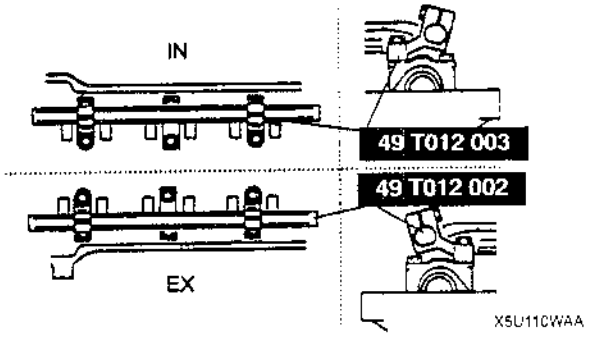

X5U110W04

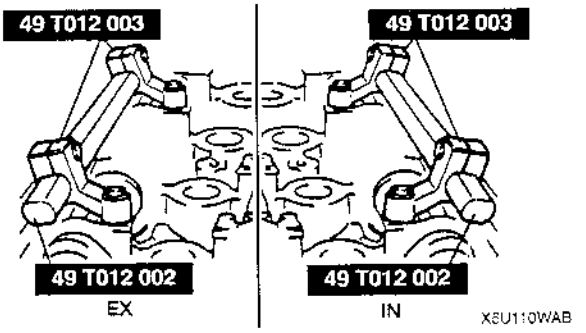

4. Align the marks on the **SSTs** (shaft and shaft clamp).
5. Tighten bolts A to secure the **SST** (shaft).

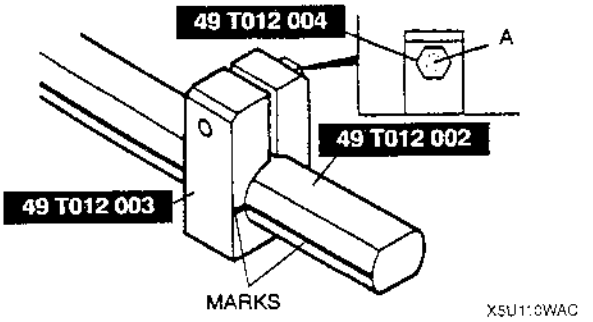

6. Face the **SST** (body) outside of the cylinder head, and mount it on the **SST** (shaft) at the point of the adjustment shim to be replaced.

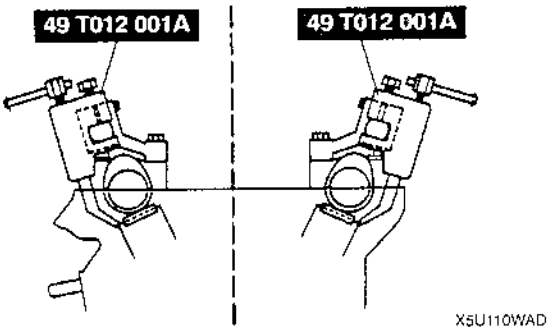

7. Face the notch of the tappet so that a small screwdriver can be inserted.

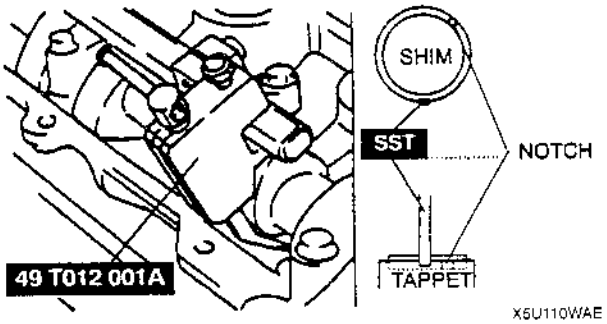

8. Set the **SST** on the tappet by its notch.
9. Tighten bolt B to secure the **SST** (body).

Caution

- **Cylinder head can be damaged when the tappet is pressed down.**

10. Tighten bolt C, and press down the tappet.

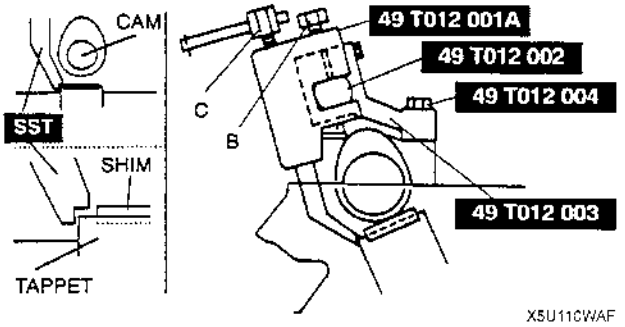

11. Using a fine screwdriver, pry up the adjustment shim through the notch on the tappet. Remove the shim by using a magnet.

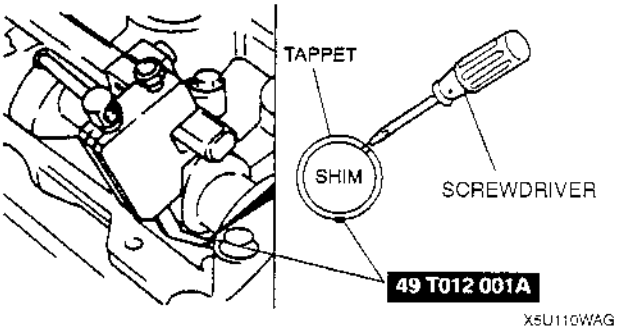

12. Select proper adjustment shim.

New adjustment shim
= Removed shim thickness + Measured valve clearance – Standard valve clearance (IN: 0.21 mm {0.008 in}, EX: 0.31 mm {0.012 in})

13. Push the selected shim into the tappet.
14. Loosen bolt C to allow the tappet to move up.
15. Loosen bolt B and remove the **SST** (body).
16. Remove the **SSTs** and tighten the camshaft cap bolts.

Tightening torque
11.3—14.2 N·m
{115—145 kgf·cm, 100—125 in·lbf}

17. Verify the valve clearance. (Refer to 01–10 VALVE CLEARANCE INSPECTION.)

COMPRESSION INSPECTION

Warning
- **When the engine and the oil are hot, they can badly burn. Be careful not to burn yourself during removal/installation of each component.**

1. Verify that the battery is fully charged. Charge it again as necessary. (Refer to 01–17 BATTERY INSPECTION.)
2. Warm up the engine to the normal operating temperature.
3. Stop the engine and allow it to cool off for about 10 minutes.
4. Perform "Fuel Line Safety Procedure". Leave the fuel pump relay removed. (Refer to 01–14 BEFORE REPAIR PROCEDURE.)
5. Remove the spark plugs. (Refer to 01–18 SPARK PLUG REMOVAL/INSTALLATION.)
6. Disconnect the ignition coil connector.
7. Connect a compression gauge into the No.1 spark plug hole.
8. Fully depress the accelerator pedal and crank the engine.
9. Record the maximum gauge reading.
10. Inspect each cylinder as above.

X5U110W05

Compression

kPa {kgf/cm^2, psi} [rpm]

Item	Engine
	BP
Standard	1442 {14.7, 209} [300]
Minimum	1009 {10.29, 146} [300]
Maximum difference between cylinders	196 kPa {2.0 kgf/cm^2, 28 psi}

11. If the compression in one or more cylinders is low or the compression difference between cylinders exceeds the maximum, pour a small amount of clean engine oil into the cylinder and inspect the compression again.
    (1) If the compression increases, the piston, the piston rings, or cylinder wall may be worn and overhaul is required.
    (2) If the compression stays low, a valve may be stuck or improperly seated and overhaul is required.
    (3) If the compression in adjacent cylinders stays low, the cylinder head gasket may be damaged or the cylinder head is distorted and overhaul is required.
12. Disconnect the compression gauge.
13. Connect the ignition coil connector.
14. Install the fuel pump relay.
15. Install the spark plugs. (Refer to 01–18 SPARK PLUG REMOVAL/INSTALLATION.)

TIMING BELT REMOVAL/INSTALLATION

X5U110W06

1. Disconnect the negative battery cable.
2. Drain the engine coolant. (Refer to 01–12 ENGINE COOLANT REPLACEMENT.)
3. Remove the air hose.
4. Remove the camshaft position sensor and crankshaft position sensor.
5. Remove the high-tension lead and ignition coil. (Refer to 01–18 IGNITION COIL REMOVAL/INSTALLATION.)
6. Remove the spark plug. (Refer to 01–18 SPARK PLUG REMOVAL/INSTALLATION.)
7. Remove in the order indicated in the table.
8. Install in the reverse order of removal.
9. Verify the air gap. (Refer to 01–40 CRANKSHAFT POSITION SENSOR INSPECTION.)
10. Start the engine and
    (1) Inspect for the pulleys and drive belt for runout and contact.
    (2) Verify the ignition timing. (Refer to 01–10 ENGINE TUNE-UP, Ignition Timing Inspection.)

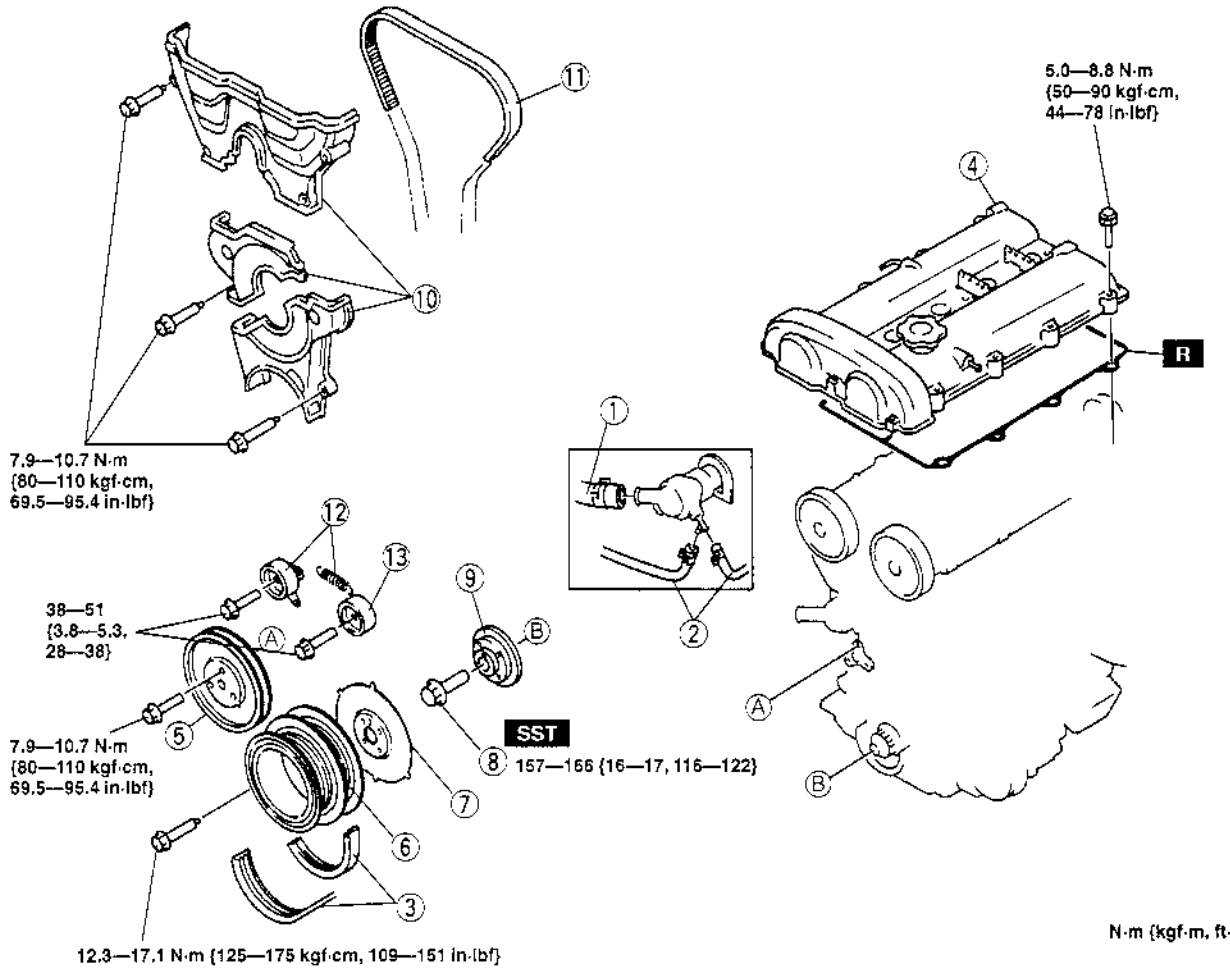

X5U110WAH

1	Upper radiator hose
2	Water hose
3	Drive belt ☞ 01–10 DRIVE BELT ADJUSTMENT
4	Cylinder head cover ☞ Installation Note
5	Water pump pulley
6	Crankshaft pulley
7	Plate

8	Pulley lock bolt ☞ Removal/Installation Note
9	Pulley boss
10	Timing belt cover
11	Timing belt ☞ Removal Note ☞ Installation Note
12	Tensioner and tensioner spring ☞ Installation Note
13	Idler

Pulley Lock Bolt Removal/Installation Note

- Hold the crankshaft by using the **SST**.

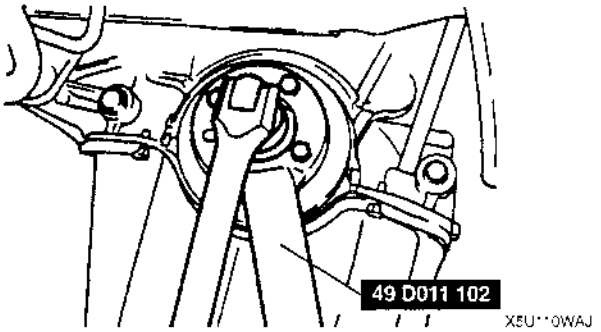

Timing Belt Removal Note

1. Install the pulley boss.
2. Install the pulley lock bolt.
3. Turn the crankshaft clockwise and face the pin on the pulley boss straight up and align the timing marks.

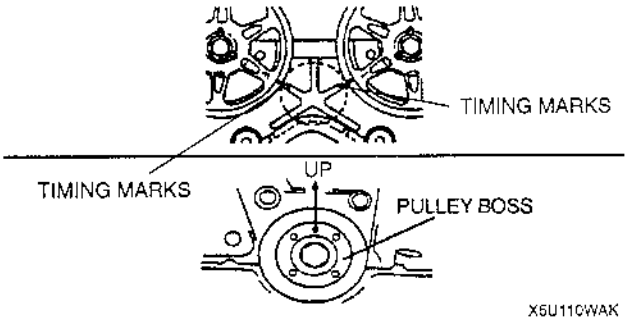

4. Loosen the tensioner lock bolt.
5. Push the tensioner in the direction of the arrow and hand-tighten the lock bolt.

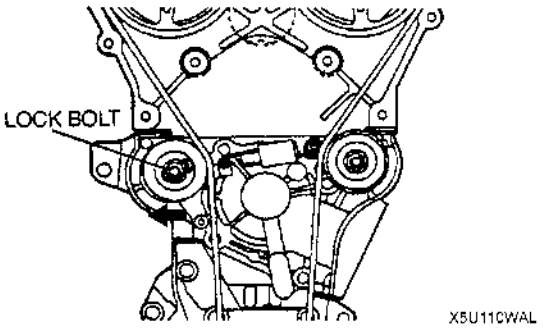

6. Remove the pulley lock bolt.
7. Remove the pulley boss.

Caution

- **The following will damage the belt and shorten its life; forcefully twisting it, turning it inside out, or allowing oil or grease on it.**

Note

- Mark the timing belt rotation on the belt for proper reinstallation.

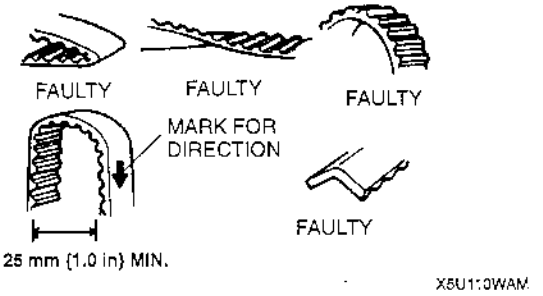

Tensioner and Tensioner Spring Installation Note

1. Measure the tensioner spring free length. If not within the specification, replace the tensioner spring.

   Free length
   59.2 mm {2.33 in}

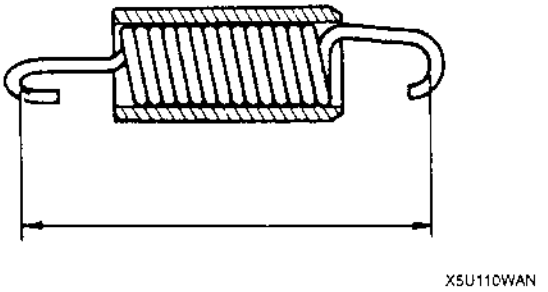

2. Install the tensioner.
3. Install the tensioner spring with the damper rubber closing face on the right side.
4. Temporarily secure the tensioner with the spring fully extended.

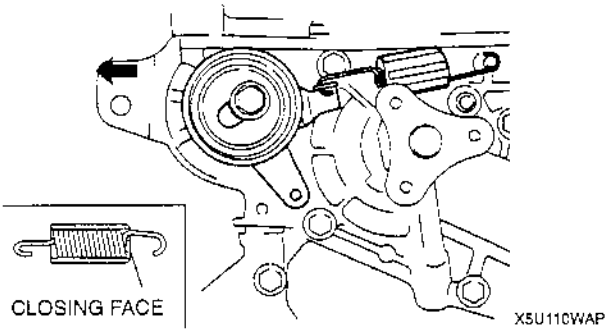

Timing Belt Installation Note

1. Verify that the timing belt pulley mark and camshaft pulley marks are aligned with the timing marks as shown.

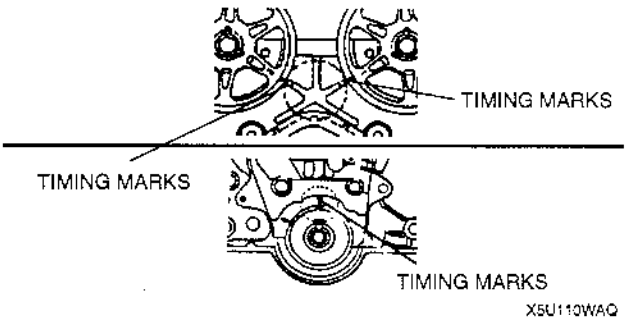

2. Install the timing belt so that there is no looseness at the idler side and between the camshaft pulleys.

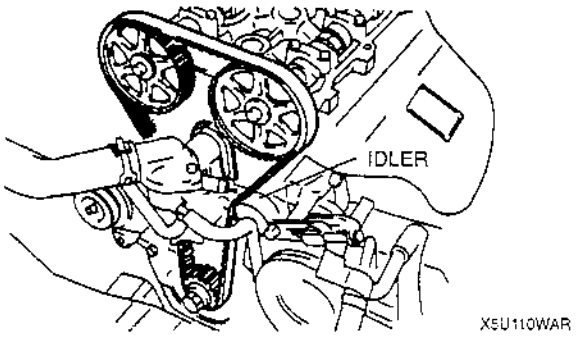

3. Install the pulley boss and pulley lock bolt.
4. Turn the crankshaft clockwise 1 and 5/6 times, and align the timing belt pulley mark with the tensioner set mark for proper timing belt tension adjustment.

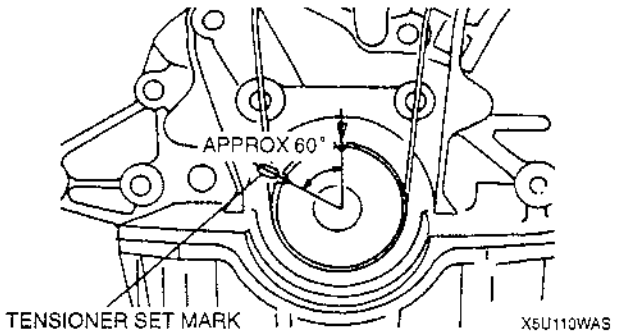

5. Hold the crankshaft by using the **SST**, and remove the pulley lock bolt and the pulley boss.

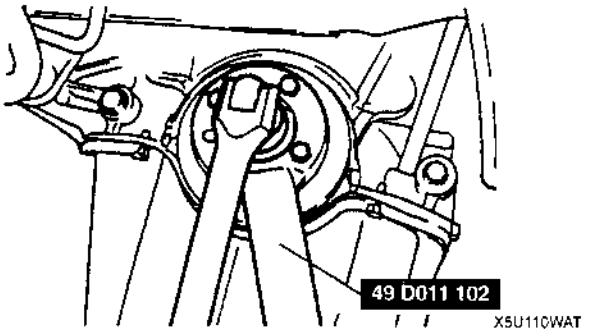

6. Verify that the timing belt pulley mark is aligned with the tensioner set mark.

Caution
- **Be sure not to apply tension other than that of the tensioner spring.**

7. Loosen the tensioner lock bolt to apply tension to the timing belt.

Caution
- **Avoid the tensioner from moving with the tensioner lock bolt as it is turned.**

8. Tighten the tensioner lock bolt.

Tightening torque
38—51 N·m {3.8—5.3 kgf·m, 28—38 ft·lbf}

9. Install the pulley boss and the pulley lock bolt.
10. Turn the crankshaft 2 and 1/6 times, and face the pin on the pulley boss straight up.
11. Verify that the camshaft pulley marks are aligned with the timing marks as shown.

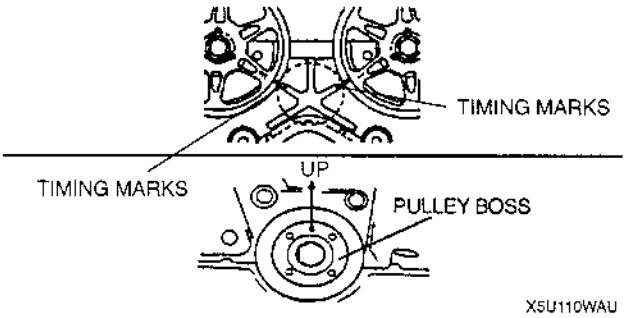

12. If not, repeat from **Timing Belt Removal Note**. (Refer to Timing Belt Removal Note.)
13. Inspect the timing belt deflection at the point indicated by applying moderate pressure **98 N {10 kgf, 22 lbf}**.

Timing belt deflection
8.5—11.5 mm {0.35—0.45 in}

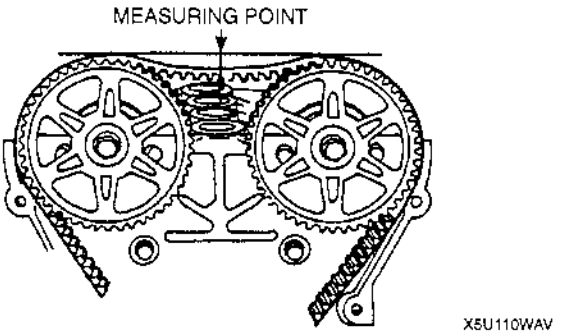

14. If not as specified, repeat from step 4.

Cylinder Head Cover Installation Note

1. Verify that the grooves on the cylinder head cover are free of oil, water and other foreign material.
2. Install the cylinder head cover gasket into the cylinder head cover.
3. Apply silicone sealant to the cylinder head as shown.

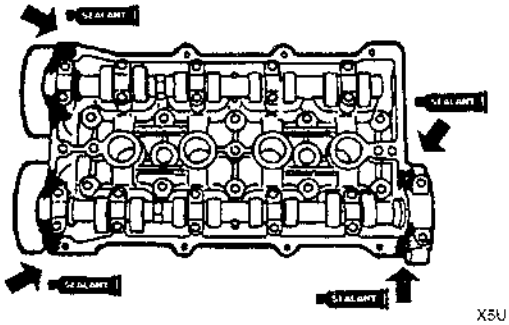

X5U110WAW

4. Hand-tighten the cylinder head cover bolt as shown.

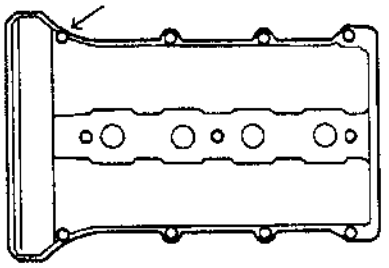

X5U110WB1

5. Tighten the cylinder head cover bolts in two or three steps in the order shown.

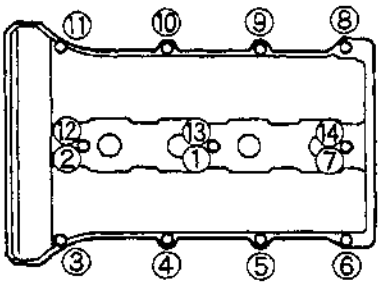

X5U110WAX

CYLINDER HEAD GASKET REPLACEMENT

X5U110W07

Warning

- **Fuel vapor is hazardous. It can very easily ignite, causing serious injury and damage. Always keep sparks and flames away from fuel.**
- **Fuel line spills and leakage are dangerous. Fuel can ignite and cause serious injuries or death and damage. Fuel can also irritate skin and eyes. To prevent this, always complete the "Fuel Line Safety Procedure". (Refer to 01–14 BEFORE REPAIR PROCEDURE.)**

1. Remove the timing belt. (Refer to 01–10 TIMING BELT REMOVAL/INSTALLATION.)
2. Remove the front pipe and exhaust manifold insulator. (Refer to 01–15 EXHAUST SYSTEM REMOVAL/INSTALLATION.)
3. Remove the air cleaner.
4. Disconnect the vacuum hose and engine harness connectors.
5. Disconnect the fuel hose. (Refer to 01–14 BEFORE REPAIR PROCEDURE.) (Refer to 01–14 AFTER REPAIR PROCEDURE.)
6. Remove the intake manifold bracket.
7. Remove in the order indicated in the table.
8. Install in the reverse order of removal.
9. Verify the engine oil level. (Refer to 01–11 ENGINE OIL INSPECTION.)
10. Inspect for the engine oil, engine coolant, and fuel leakage.
11. Verify the compression. (Refer to 01–10 COMPRESSION INSPECTION.)
12. Start the engine and verify the idle speed. (Refer to 01–10 ENGINE TUNE-UP, Idle Speed Adjustment.)

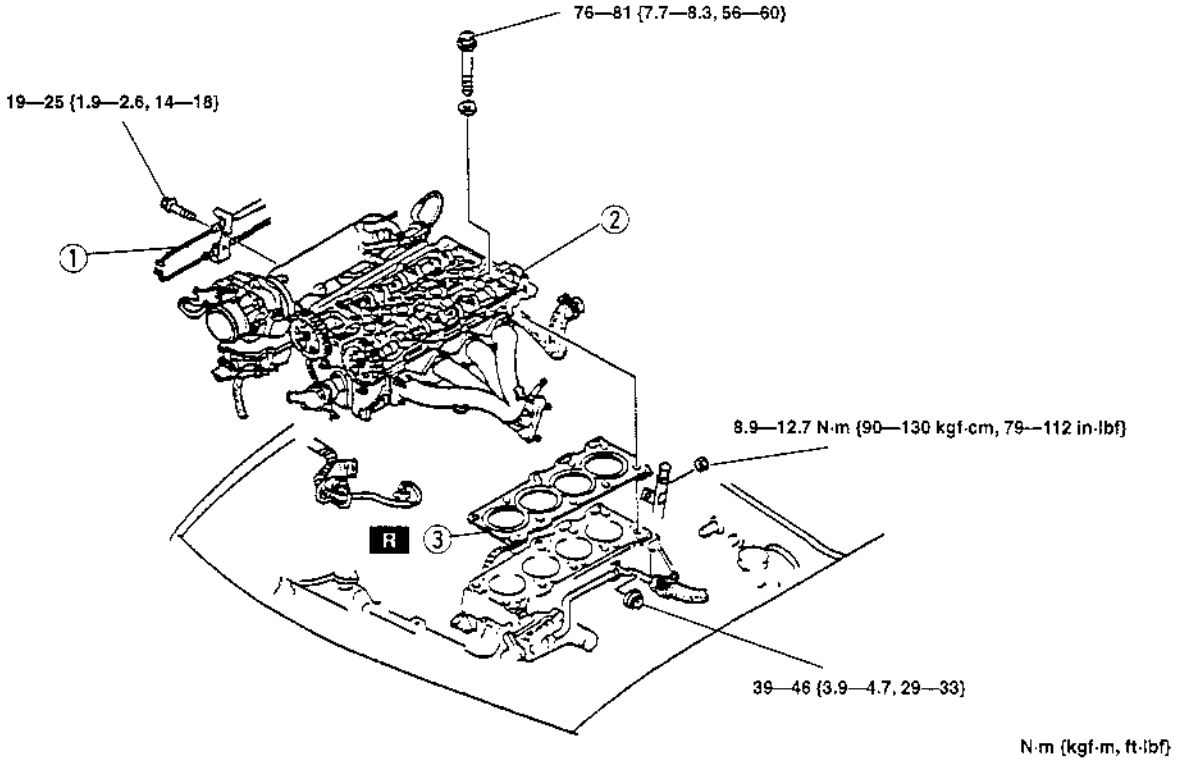

X5U110WAY

1	Accelerator cable bracket
2	Cylinder head ☞ Removal Note ☞ Installation Note
3	Cylinder head gasket

Cylinder Head Removal Note

- Loosen the cylinder head bolts in two or three steps in the order shown.

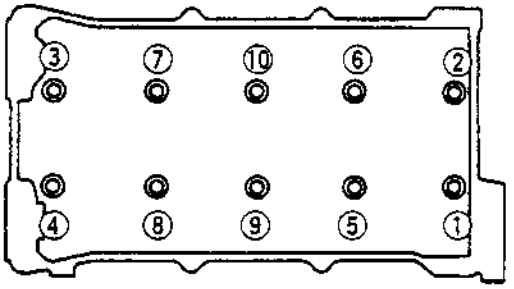

X5U110WAZ

Cylinder Head Installation Note

- Tighten the cylinder head bolts in two or three steps in the order shown.

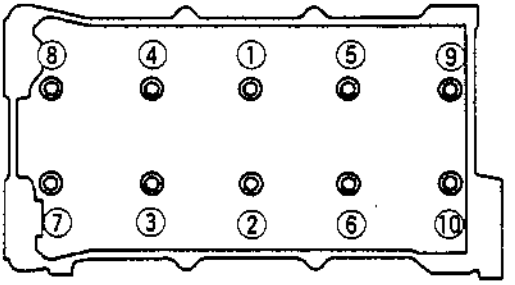

X5U110WB0

TAPPET AND ADJUSTMENT SHIM REMOVAL/INSTALLATION

X5U110W08

1. Remove the timing belt. (Refer to 01–10 TIMING BELT REMOVAL/INSTALLATION.)
2. Remove in the order indicated in the table.
3. Install in the reverse order of removal.

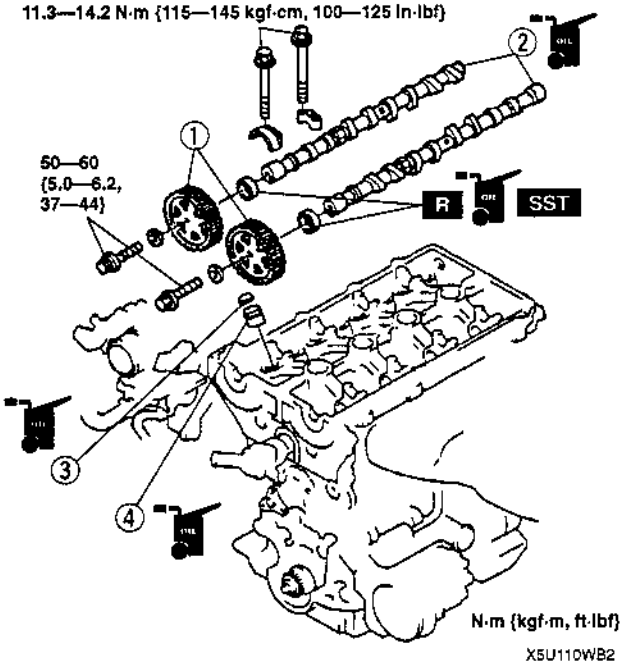

X5U110WB2

1	Camshaft pulley ☞ Removal Note ☞ Installation Note
2	Camshaft ☞ Removal Note ☞ Installation Note
3	Adjustment shim
4	Tappet

Camshaft Pulley Removal Note

- Hold the camshaft with a wrench at the cast hexagon, and remove the camshaft pulley lock bolt.

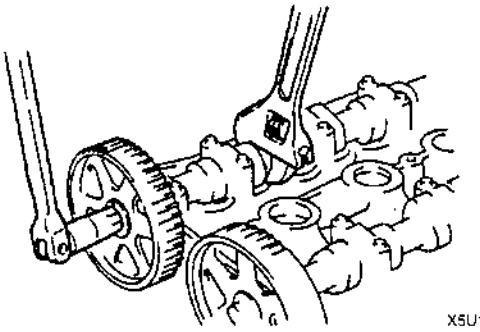

X5U110WB3

Camshaft Removal Note

1. Loosen the camshaft cap bolts in two or three steps in the order shown.

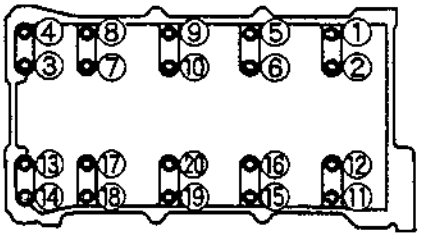

X5U110WB4

2. Remove the camshaft caps.

Camshaft Installation Note

Caution

- **Because there is little camshaft thrust clearance, the camshaft must be held horizontally while it is installed. Otherwise, excessive force will be applied to the thrust area, causing burr on the thrust receiving area of the cylinder head journal. To avoid this, the following procedure must be observed.**

1. Assemble camshaft onto the cylinder head, facing the cam noses at No.1 and No.3 cylinders as shown.

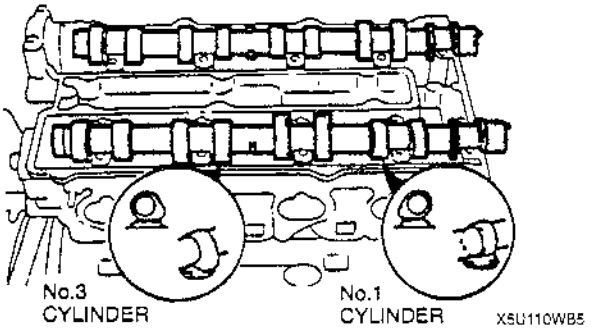

2. Apply silicone sealant to the areas shown. Keep the camshaft sliding surface free of sealant to prevent engine damage.

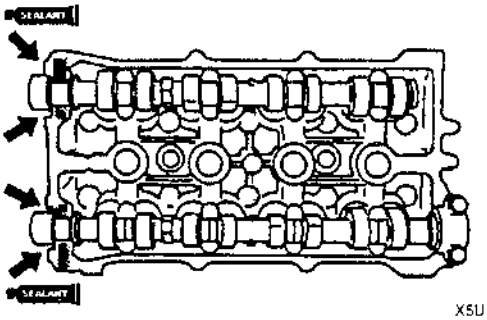

3. Apply engine oil to the camshaft and the cylinder head journals.
4. Install the camshaft caps to the positions from which they were removed.
5. Tighten the camshaft cap bolts in two or three steps in the order shown.

Tightening torque
11.3—14.2 N·m
{115—145 kgf·cm, 100—125 in·lbf}

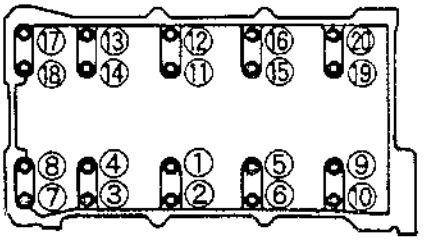

6. Verify that the camshaft settles horizontally when two bearing cap bolts at No.3 journal are tightened.
7. Apply clean engine oil to the camshaft oil seal.
8. Push the oil seal slightly in by hand.
9. Tap the oil seals in evenly by using the **SST** and a hammer.

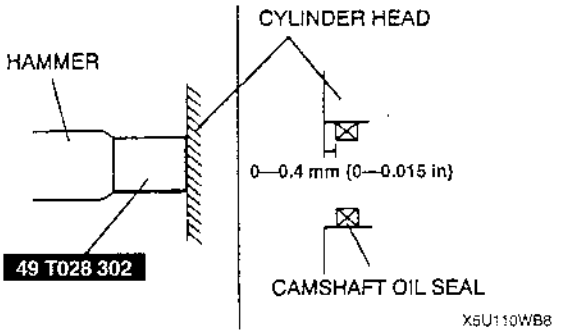

Camshaft Pulley Installation Note

1. Turn the camshafts until the camshaft dowel pins face straight up.
2. Install the camshaft pulleys with the I mark (intake side) or the E mark (exhaust side) straight up.

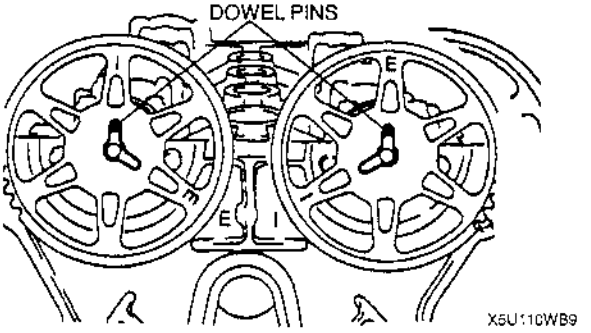

3. Hold the camshaft by using a wrench on the cast hexagon, and tighten the camshaft pulley lock bolt.

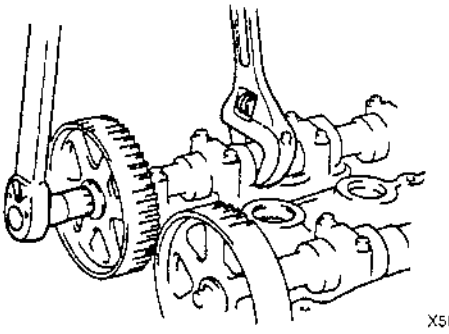

FRONT OIL SEAL REPLACEMENT

X5U110W09

1. Remove the timing belt. (Refer to 01–10 TIMING BELT REMOVAL/INSTALLATION.)
2. Remove in the order indicated in the table.
3. Install in the reverse order of removal.

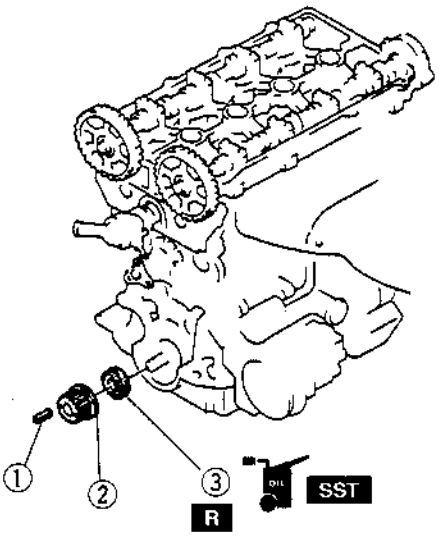

X5U110WBB

1	Key
2	Timing belt pulley
3	Front oil seal ☞ Removal Note ☞ Installation Note

Front Oil Seal Removal Note

1. Cut the oil seal lip by using a razor knife.
2. Remove the oil seal by using a screwdriver protected with a rag.

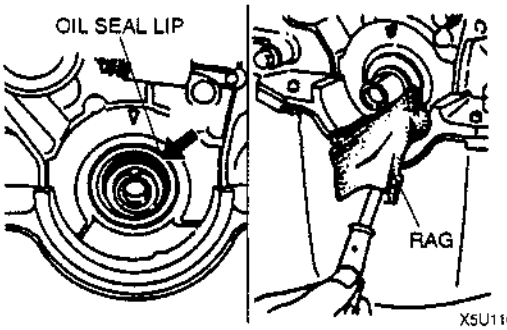

X5U110WBC

Front Oil Seal Installation Note

1. Apply clean engine oil to the oil seal lip.
2. Push the oil seal slightly in by hand.
3. Tap the oil seal in evenly by using the **SST** and a hammer.

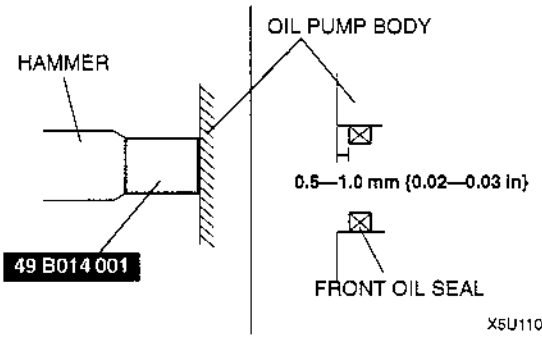

X5U110WBD

REAR OIL SEAL REPLACEMENT

1. Remove the flywheel. (MT) (Refer to 05–10 CLUTCH UNIT REMOVAL/INSTALLATION.)
2. Remove the drive plate. (AT) (Refer to 05–13 DRIVE PLATE REMOVAL/INSTALLATION.)
3. Remove in the order indicated in the table.
4. Install in the reverse order of removal.

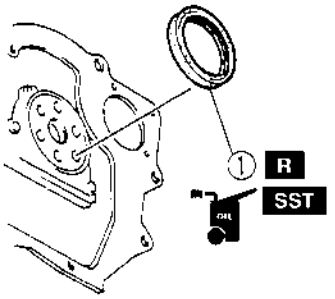

X5U110WBE

1	Rear oil seal ☞ Removal Note ☞ Installation Note

X5U110W10

Rear Oil Seal Removal Note

1. Cut the oil seal lip by using a razor knife.
2. Remove the oil seal by using a screwdriver protected with a rag.

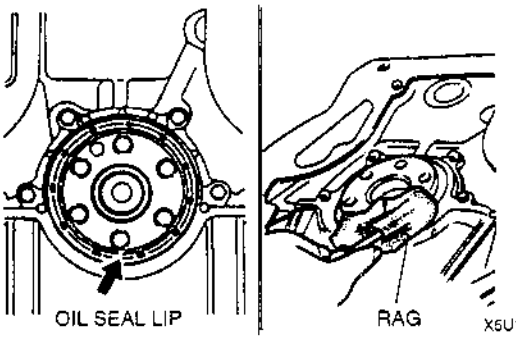

X5U110WBF

Rear Oil Seal Installation Note

1. Apply clean engine oil to the new oil seal lip.
2. Push the oil seal slightly in by hand.
3. Tap the oil seal in evenly by using the **SST** and a hammer.

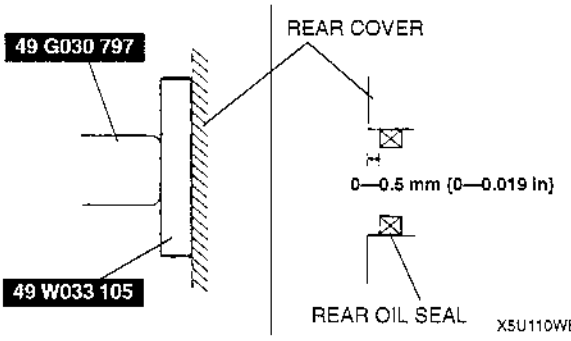

X5U110WBG

ENGINE REMOVAL/INSTALLATION

X5U110W11

Warning

- **Fuel vapor is hazardous. It can very easily ignite, causing serious injury and damage. Always keep sparks and flames away from fuel.**
- **Fuel line spills and leakage are dangerous. Fuel can ignite and cause serious injuries or death and damage. Fuel can also irritate skin and eyes. To prevent this, always complete the "Fuel Line Safety Procedure". (Refer to 01–14 BEFORE REPAIR PROCEDURE.)**

1. Disconnect the negative battery cable.
2. Remove the radiator. (Refer to 01–12 RADIATOR REMOVAL/INSTALLATION.)
3. Remove the air cleaner.
4. Disconnect the accelerator cable and bracket.
5. Disconnect the fuel hose. (Refer to 01–14 BEFORE REPAIR PROCEDURE.) (Refer to 01–14 AFTER REPAIR PROCEDURE.)
6. Disconnect the vacuum hose and engine harness connectors.
7. Disconnect the heater hose.
8. Remove the drive belt. (Refer to 01–10 DRIVE BELT ADJUSTMENT.)
9. Remove the P/S oil pump with the oil hose still connected. Position the P/S oil pump so that it is out of the way. (with P/S oil pump)
10. Remove the A/C compressor with the pipe still connected. Position the A/C compressor so that it is out of the way. (with A/C compressor)
11. Remove the transmission. (Refer to 05–11 MANUAL TRANSMISSION REMOVAL/INSTALLATION.) (Refer to 05–13 AUTOMATIC TRANSMISSION REMOVAL/INSTALLATION.)
12. Remove in the order indicated in the table.
13. Install in the reverse order of removal.
14. Start the engine and
    (1) Inspect for the engine oil, engine coolant, transmission oil and fuel leakage.
    (2) Verify the ignition timing. (Refer to 01–10 ENGINE TUNE-UP, Ignition Timing Inspection.)
    (3) Verify the idle speed. (Refer to 01–10 ENGINE TUNE-UP, Idle Speed Adjustment.)
    (4) Verify the idle mixture. (Refer to 01–10 ENGINE TUNE-UP, Idle Mixture Inspection.)
15. Perform a road test.

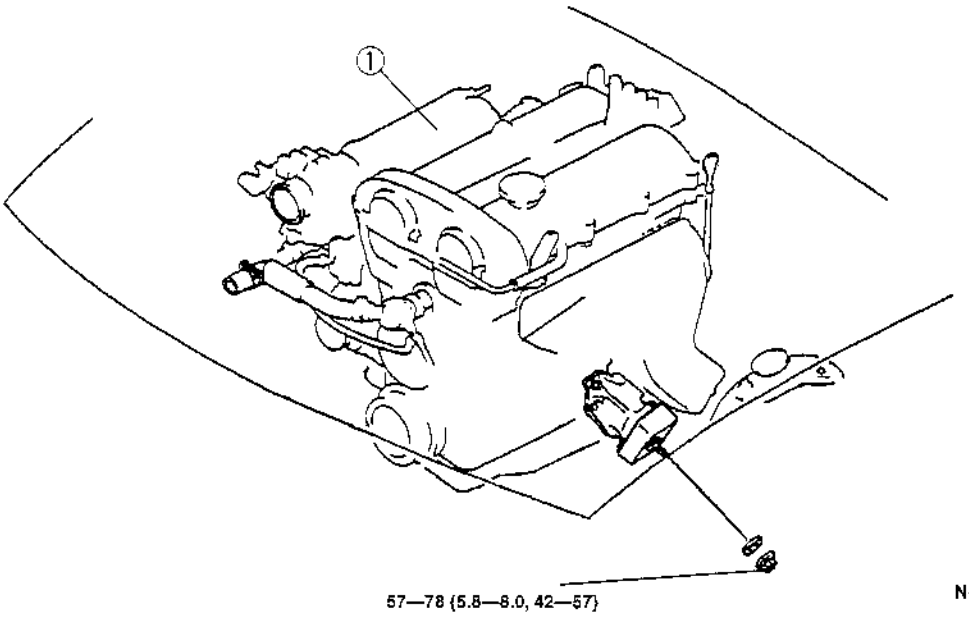

X5U110WBH

1	Engine

ENGINE DISASSEMBLY/ASSEMBLY

X5U110W12

1. Remove the oil pressure switch. (Refer to 01–11 OIL PRESSURE INSPECTION.)
2. Remove the intake-air system. (Refer to 01–13 INTAKE-AIR SYSTEM, INTAKE-AIR SYSTEM REMOVAL/INSTALLATION.)
3. Remove the exhaust system. (Refer to 01–15 EXHAUST SYSTEM, EXHAUST SYSTEM REMOVAL/INSTALLATION.)
4. Remove the oil filter. (Refer to 01–11 OIL FILTER REPLACEMENT.)
5. Remove the high-tension lead. (Refer to 01–18 HIGH-TENSION LEAD REMOVAL/INSTALLATION.)
6. Remove the ignition coil.
7. Remove the generator.
8. Disassemble in the order indicated in the table.
9. Assemble in the reverse order of disassembly.

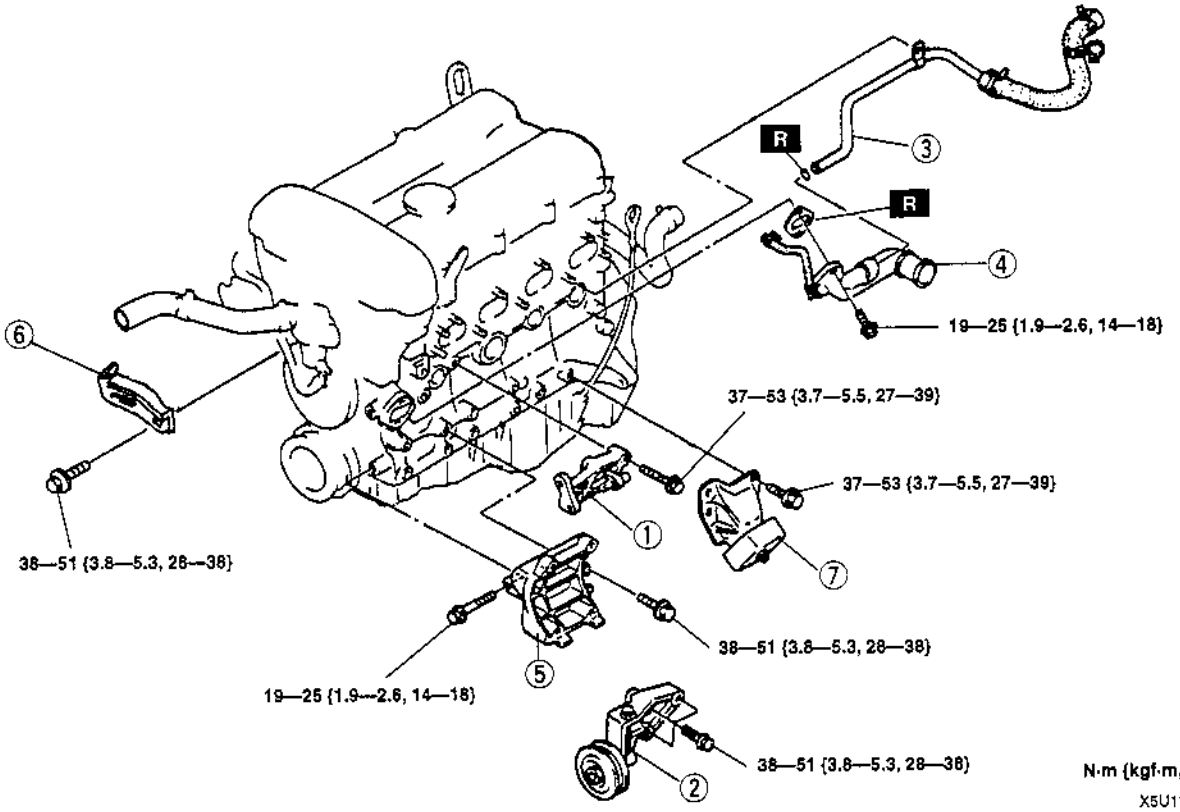

X5U110WBJ

1	P/S oil pump bracket (with P/S oil pump)
2	Idler (without P/S oil pump)
3	Water bypass pipe
4	Water inlet pipe

5	A/C compressor bracket (with A/C compressor)
6	Generator strap
7	Engine mount ☞ Installation Note (RH)

Engine Mount Installation Note (RH)

- Install the engine bolts as shown.

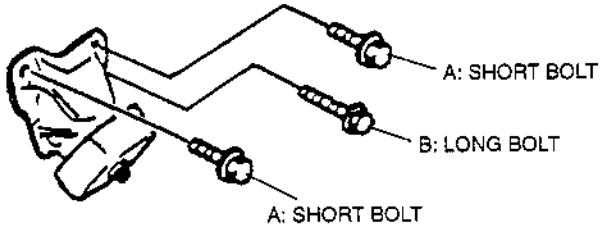

X5U110WBN

ENGINE TUNE-UP

Engine Tune-up Preparation

1. Warm up the engine to normal operating temperature.
2. Shift transmission into Neutral (MT) or P position (AT).
3. Turn off all electrical loads.
   - Headlight
   - Blower
   - Rear window defroster
4. Verify that the battery is fully charged. (Refer to 01–17 BATTERY INSPECTION.)
5. Wait until the electrical fan stops.
6. Connect the NGS tester to the data link connector-2 and select the "PID/DATA MONITOR AND RECORD" function and press TRIGGER.

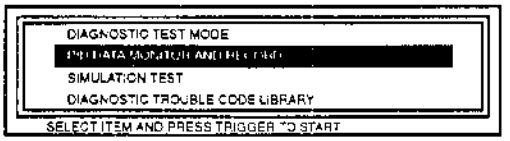

X5U110WBK

7. Select "RPM" and press TRIGGER.
8. Press "SET UP" and turn the test mode on (press ON).
9. Press CANCEL.
10. Select "START" to begin.

Ignition Timing Inspection

1. Perform "Engine Tune-up Preparation".
2. Verify that the idle speed is within the specification.

   Specification
   750—850 (800 ± 50) rpm

3. If not as specified, adjust the idle speed. (Refer to Idle Speed Adjustment.)
4. Connect a timing light to the high-tension lead of the No.1 cylinder.
5. Verify that the timing mark (white) on the crankshaft pulley and the T mark on the timing belt cover are aligned.

   Ignition timing
   BTDC 9°—11° (10° ± 1°)
   (TIMING MARK [YELLOW])

6. Press "SET UP" and turn the test mode off. (press OFF)
7. Press CANCEL.
8. Verify that the timing mark (yellow) is within the specification.

X5U110W13

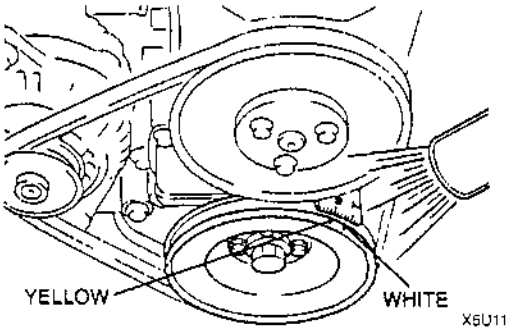

X5U110WBL

   Specification
   BTDC 6—18°

9. If not as specified, inspect the following.
   - Camshaft position sensor
   - Crankshaft position sensor
   - Throttle position sensor
   - Engine coolant temperature sensor
   - Neutral switch (MT)
   - Clutch switch (MT)
   - Transmission range switch (AT)
10. If the devices are normal, replace the PCM.

Idle Speed Adjustment

1. Perform "Engine Tune-up Preparation".
2. Verify that the idle speed is within the specification.

   Specification
   750—850 (800 ± 50) rpm

3. If not within the specification, adjust the idle speed by turning the air adjusting screw (AAS).

   Caution
   - **The throttle adjusting screw (TAS) is set at the factory and must not be adjusted. Any adjustment will negatively effect the engine performance.**

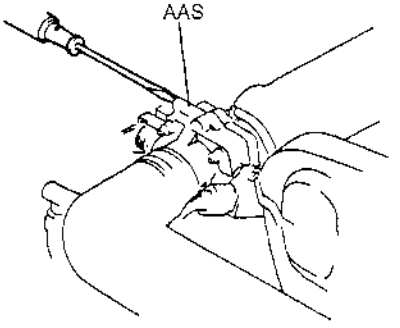

X5U110WBM

4. Press SET UP and turn the test mode off. (press OFF)
5. Press CLEAR to clear previously selected items.
6. Disconnect the NGS tester.

Idle-up Speed Inspection

1. Perform "Engine Tune-up Preparation", "Idle Speed Adjustment".
2. Press SET UP and turn the test mode off (press OFF).
3. Press CANCEL.
4. Press START.
5. Verify that the idle speed is normal.
6. Verify that the idle-up speed is within the specification.

Load condition	Idle-up speed (rpm)*1		
	MT	AT	
		N, P position	D range
E/L ON*2	750—850 (800 ± 50)	750—850 (800 ± 50)	700—800 (750 ± 50)
P/S ON*3			
A/C ON*4	950—1050 (1000 ± 50)		

*1 : Excludes temporary idle speed drop just after the electrical loads (E/L) are turned on.
*2 : Headlight is on, Fan switch (above 1st), Cooling fan are operating, Rear window defroster is on.
*3 : Steering wheel is fully turned.
*4 : A/C switch and fan switch are on.

7. If not as specified with all loads conditions, inspect the idle air control valve.
   If not as specified with some load conditions, inspect related input switches, harnesses and connectors.

Idle Mixture Inspection

1. Perform "Engine Tune-up Preparation".
2. Verify that the idle speed and ignition timing are within the specification.
3. Insert an exhaust gas analyzer to the tailpipe.
4. Verify that the CO and HC concentrations are within the regulation.
5. If not, inspect the following.
   - On-board diagnostic system
   - Heated oxygen sensor
   - Intake manifold vacuum
   - Fuel line pressure
   - Ignition timing control
6. If the systems are normal, replace the following.
   - California emission regulation applicable model: Warm up three way catalytic converter.
   - Except california model: Three way catalytic converter.

01–11 LUBRICATION SYSTEM

ENGINE OIL LEVEL INSPECTION

X5U111W01

1. Position the vehicle on level ground.
2. Warm up the engine to normal operating temperature and stop it.
3. Wait for five minutes.
4. Remove the dipstick and inspect oil level and condition. Verify that the oil level is within the F and L marks on the dipstick.
5. Add or replace oil as necessary.

ENGINE OIL REPLACEMENT

X5U111W02

Warning

- **When the engine and the engine oil are hot, they can badly burn. Don't burn yourself with either.**
- **A vehicle that is lifted but not securely supported on safety stands is dangerous. It can slip or fall, causing death or serious injury. Never work around or under a lifted vehicle if it is not securely supported on safety stands.**
- **Continuous exposure with USED engine oil has caused skin cancer in laboratory mice. Protect your skin by washing with soap and water immediately after this work.**

1. Position the vehicle on level ground.
2. Remove the oil filler cap and the oil pan drain plug.
3. Drain the oil into a container.
4. Install a new gasket and the drain plug.

   Tightening torque
   30—41 N·m {3.0—4.2 kgf·m, 22—30 ft·lbf}

5. Refill the engine with the specified type and amount of engine oil.
6. Refit the oil filler cap.
7. Run the engine and inspect for oil leakage.
8. Inspect the oil level and add oil as necessary. (Refer to 01–11 ENGINE OIL LEVEL INSPECTION.)

   Note

   - The actual oil level may vary from the specified capacity in some cases.

Oil capacity

L {US qt, Imp qt}

Item	Engine
	BP
Oil replacement	3.6 {3.8, 3.2}
Oil and oil filter replacement	3.8 {4.0, 3.3}
Total (dry engine)	4.0 {4.2, 3.5}

Engine oil grade
API Service
SG (Energy Conserving II),
SH (Energy Conserving II) or ILSAC (GF-I)
SJ or ILSAC (GF-II)
Engine oil viscosity
Above –25 °C {–13 °F}: SAE 10W–30
Below 0 °C {32 °F}: SAE 5W–30

OIL FILTER REPLACEMENT

X5U111W03

1. Remove the oil filter by using the **SST**.

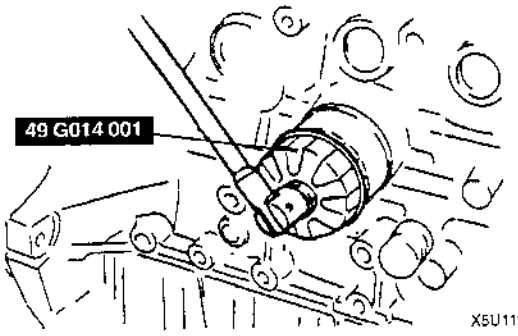

X5U111WA0

2. Use a clean rag to wipe off the mounting surface on the oil filter body.
3. Apply clean engine oil to the O-ring of the oil filter.
4. Tighten the filter according to the installation direction on the side of it or packing box by using the **SST**.
5. Start the engine and inspect for oil leakage.
6. Inspect the oil level and add oil as necessary. (Refer to 01–11 ENGINE OIL LEVEL INSPECTION.)

OIL PRESSURE INSPECTION

X5U111W04

Warning

- **Continuous exposure with USED engine oil has caused skin cancer in laboratory mice. Protect your skin by washing with soap and water immediately after this work.**
- **When the engine and the oil are hot, they can badly burn. Turn off the engine and wait until they are cool.**

1. Remove the oil pressure switch.
2. Screw the **SST** into the oil pressure switch installation hole.

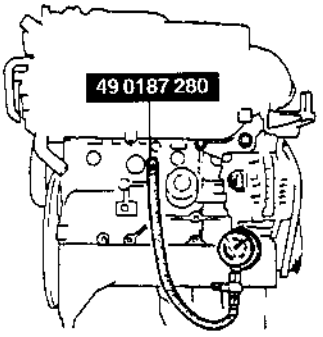

X5U111WA1

3. Warm up the engine to normal operating temperature.
4. Run the engine at the specified speed, and note the gauge readings.

Note

- The oil pressure can vary with oil viscosity and temperature.

Oil pressure
295—392 kPa
{3.0—4.0 kgf/cm^2, 43—56 psi} [3,000 rpm]

5. If the pressure is not as specified, inspect for amount of engine oil, oil leakage, or any wear parts inside of engine etc. Repair or replace as necessary.
6. Stop the engine and wait until it is cool.
7. Remove the **SST**.

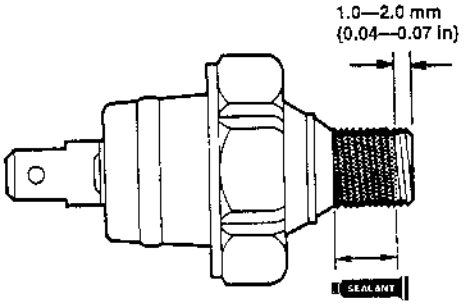

X5U111WA2

8. Apply silicone sealant to the oil pressure switch threads as shown.
9. Install the oil pressure switch.

Tightening torque
12—17 N·m {1.2—1.8 kgf·m, 9—13 ft·lbf}

10. Start the engine and inspect for oil leakage.

OIL COOLER REMOVAL/INSTALLATION

X5U111W05

1. Disconnect the negative battery cable.
2. Drain the engine coolant. (Refer to 01–12 ENGINE COOLANT REPLACEMENT.)
3. Remove the intake manifold bracket.
4. Remove the oil filter. (Refer to 01–11 OIL FILTER REPLACEMENT.)
5. Remove in the order indicated in the table.
6. Install in the reverse order of removal.
7. Inspect the engine oil level. (Refer to 01–11 ENGINE OIL LEVEL INSPECTION.)
8. Start the engine and inspect for the engine oil leakage.

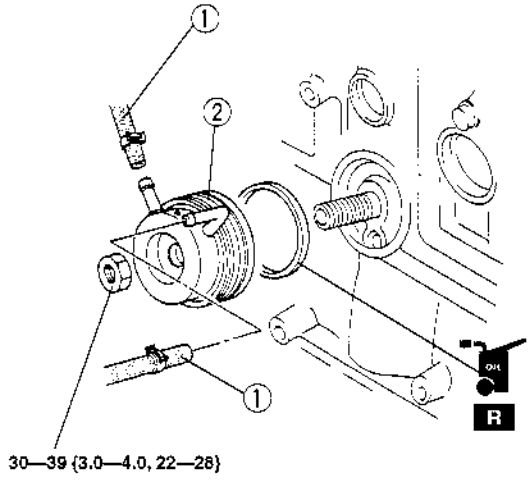

N·m {kgf·m, ft·lbf}

X5U111WA3

1	Water hose
2	Oil cooler

OIL PAN REMOVAL/INSTALLATION

X5U111W06

1. Disconnect the negative battery cable.
2. Remove the air cleaner component. (Refer to 01–13 INTAKE-AIR SYSTEM REMOVAL/INSTALLATION.)

Caution

- **Performing the following procedures without first removing the ABS wheel-speed sensor may possibly cause an open circuit in the harness if it is pulled by mistake. Before performing the following procedures, remove the ABS wheel-speed sensor (axle side) and fix it to an appropriate place where the sensor will not be pulled by mistake while servicing the vehicle.**

3. Remove the ABS wheel-speed sensor.
4. Drain the engine oil. (Refer to 01–11 ENGINE OIL REPLACEMENT.)
5. Remove in the order indicated in the table.
6. Install in the reverse order of removal.

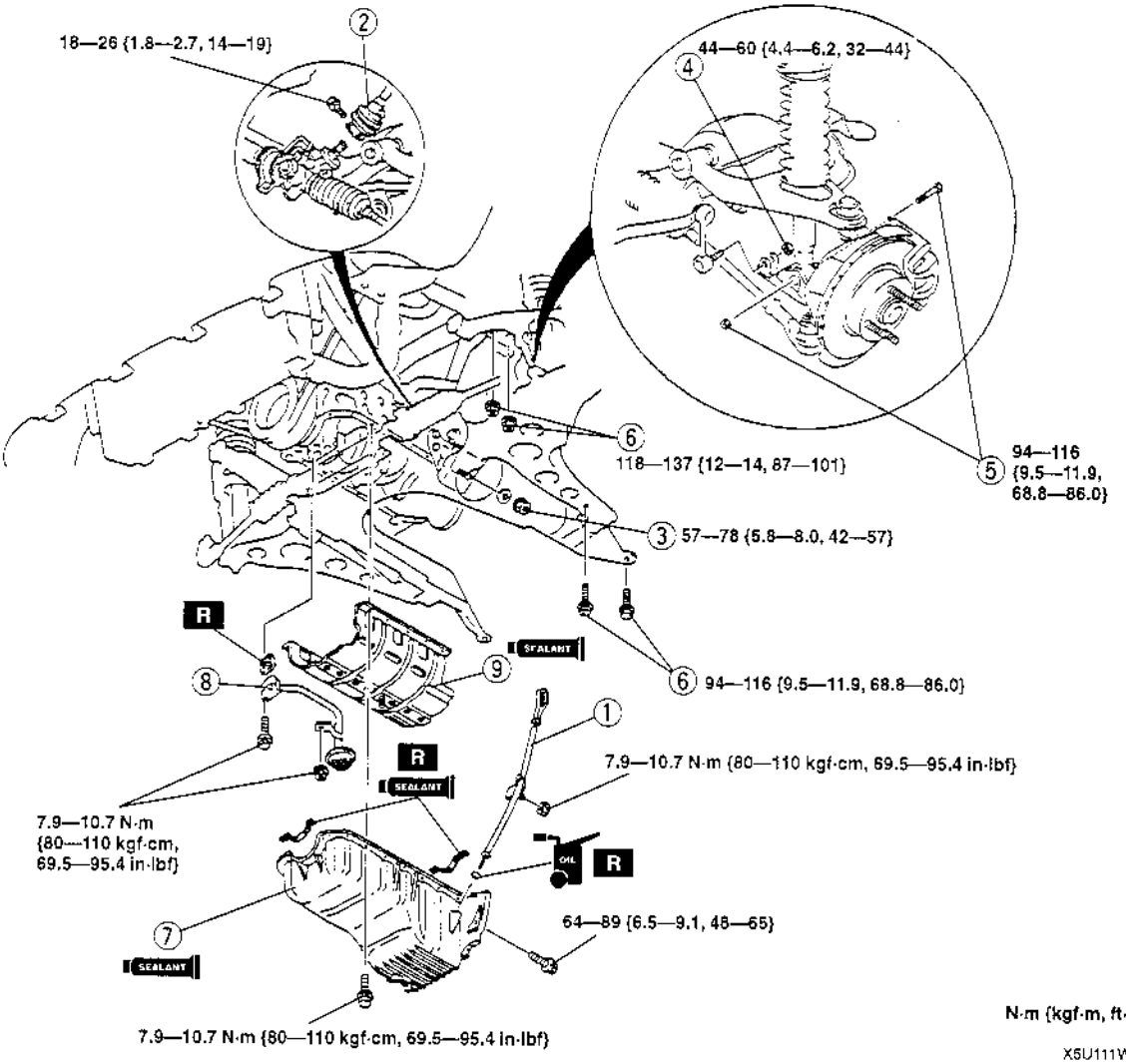

X5U111WA4

1	Dipstick and pipe
2	Intermediate shaft
3	Engine mount nut ☞ Removal Note
4	Stabilizer control link nut
5	Shock absorber bolt and nut
6	Crossmember bolt and nut ☞ Removal Note

7	Oil pan ☞ Removal Note ☞ Installation Note
8	Oil strainer
9	Oil baffle ☞ Removal Note ☞ Installation Note

Engine Mount Nut Removal Note

1. Loosen the oil pan mounting bolts.
2. Remove the engine mounting nuts.

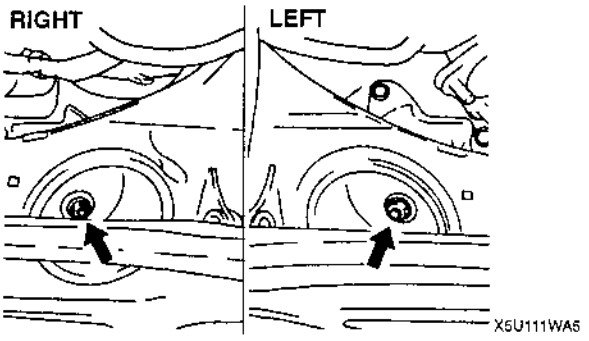

3. Lift the engine slightly by using a hoist.

Crossmember Bolt and Nut Removal Note

1. Support the crossmember by using a transmission jack.
2. Remove the crossmember bolts and nuts.

Caution

- **Do not damage the brake hoses, A/C pipes and P/S pipes when lowering the crossmember.**

Note

- Lower the crossmember after separating the steering intermediate shaft from the pinion shaft.

3. Lower the crossmember until the clearance between the oil pan and the steering gear housing exceeds **approx. 130 mm {5.12 in}**.

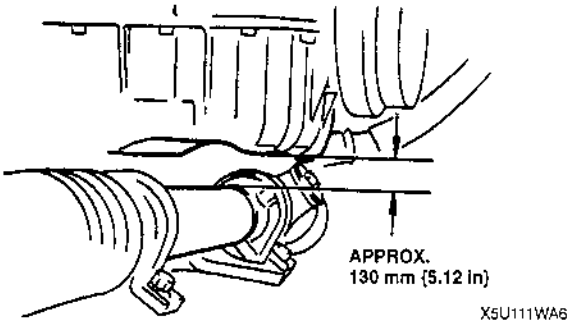

Oil Pan Removal Note

1. Remove the oil pan mounting bolts.

Caution

- **Pry tools can easily scratch the cylinder block and the oil pan contact surfaces. Prying off the oil pan can also easily bend the oil pan flange. Refer to the following instructions before removing the oil pan.**

2. Insert a screwdriver only at the points shown in the figure.

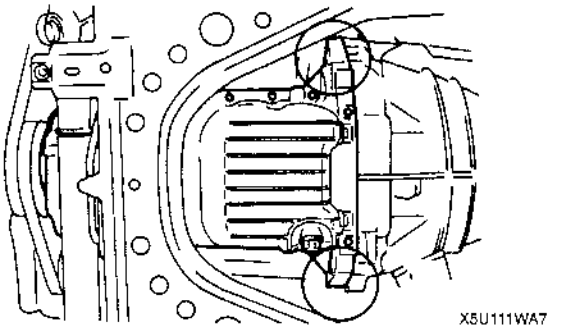

Oil Baffle Removal Note

- Insert a screwdriver or a separator tool between the cylinder block and the oil baffle.

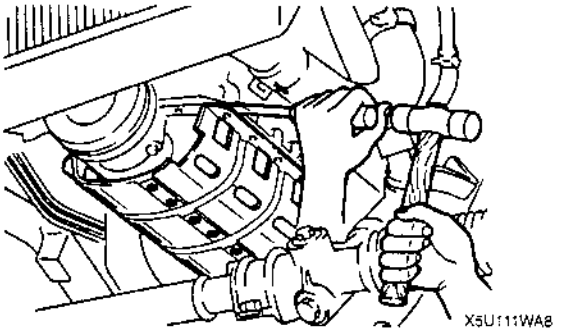

Oil Baffle Installation Note

- Apply silicone sealant to the oil baffle along the inside of the bolt holes.

Thickness

ϕ2.5—3.5 mm {0.099—0.137 in}

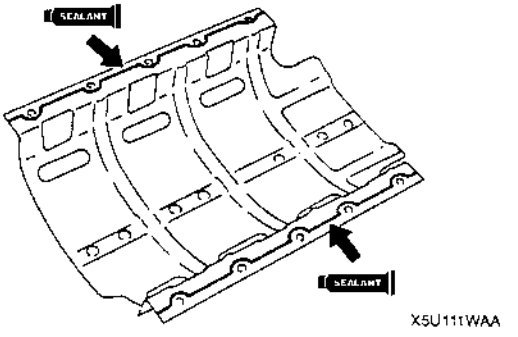

Oil Pan Installation Note

Caution

- **If the bolts are reused, remove the old sealant from the bolt threads. Tightening a bolt that has old sealant on it can cause thread damage.**

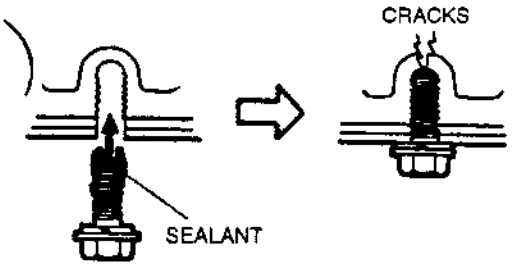

X5U111WA9

1. Apply silicone sealant to the contact surfaces of new oil pan gaskets as shown.

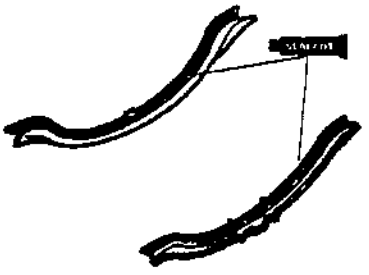

X5U111WAB

2. Install new gaskets onto the oil pump body and the rear cover facing the notches as shown.

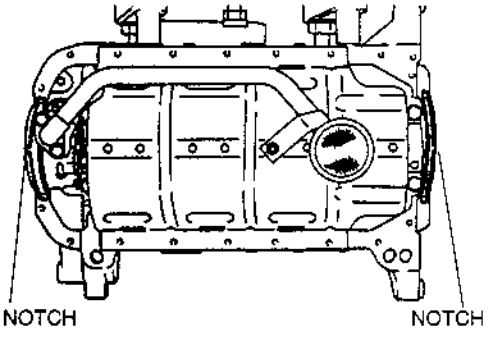

X5U111WAC

3. Apply silicone sealant onto the area of oil pan gasket indicated by A and B.

Thickness
ϕ2.0 mm {0.079 in}

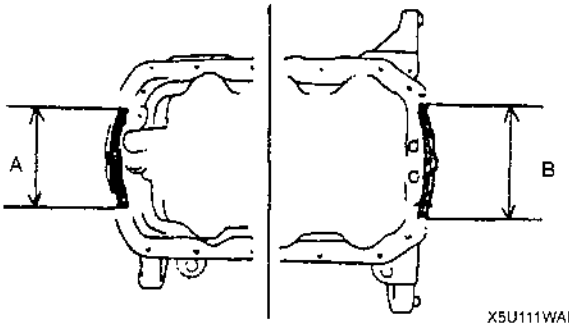

X5U111WAD

4. Apply silicone sealant to the shaded areas shown.

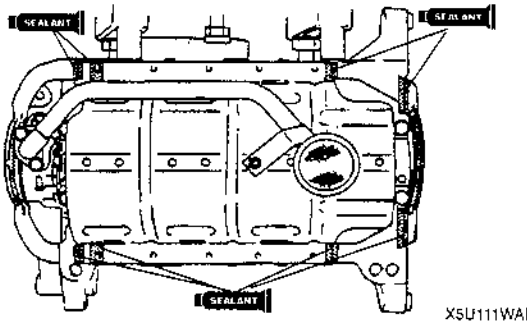

X5U111WAE

5. Apply silicone sealant to the oil pan along the inside of the bolt holes and overlap the ends.

Thickness
ϕ2.5—3.5 mm {0.099—0.137 in}

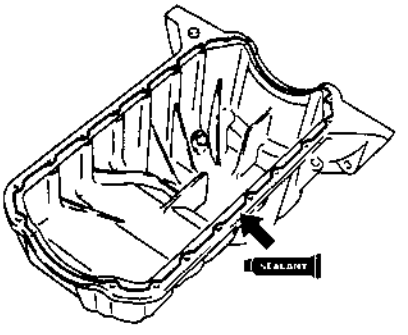

X5U111WAF

01–12 COOLING SYSTEM

COOLING SYSTEM SERVICE WARNINGS

X5U112W01

Warning

- **Removing the radiator cap or loosening the radiator drain plug while the engine is running, or when the engine and radiator are hot is dangerous. Scalding coolant and steam may shoot out and cause serious injury. It may also damage the engine and cooling system.**
- **Turn off the engine and wait until it is cool. Even then, be very careful when removing the cap. Wrap a thick cloth around it and slowly turn it counterclockwise to the first stop. Step back while the pressure escapes. When you're sure all the pressure is gone, press down on the cap—still using a cloth—turn it, and remove it.**
- **When the engine and the engine coolant are hot, they can badly burn. Turn off the engine and wait until they are cool before draining the engine coolant.**

ENGINE COOLANT LEVEL INSPECTION

X5U112W02

1. Remove the radiator cap. (Refer to 01–12 COOLING SYSTEM SERVICE WARNINGS.)
2. Verify that the coolant level is near the radiator filler neck.
3. Verify that the coolant level on the coolant reservoir is between the FULL and LOW marks.
4. Add coolant as necessary.

ENGINE COOLANT REPLACEMENT

1. Drain the coolant in the coolant reservoir.
2. Remove the radiator cap and the radiator drain plug. (Refer to 01–12 COOLING SYSTEM SERVICE WARNINGS.)

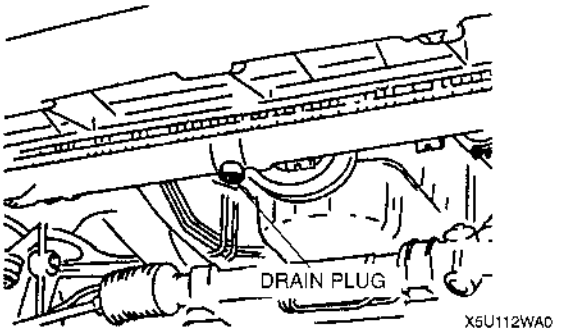

3. Drain the coolant into a container.
4. Flush the cooling system with water until all traces of color are gone.
5. Leave the system until drain completely.
6. Tighten the radiator drain plug.

Tightening torque
0.7—1.1 N·m {7—12 kgf·cm, 7—10 in·lbf}

Caution
- **The engine has aluminum parts that can be damaged by alcohol or methanol antifreeze. Do not use alcohol or methanol in the cooling system. Use only ethylene-glycol-based coolant.**
- **Use only soft (demineralized) water in the coolant mixture. Water that contains minerals will cut down on the coolant's effectiveness.**

7. Referring to the following graph and chart, select proper gravity of the coolant. Slowly pour the coolant into the radiator up to the coolant filler port.

Filling pace
1.0 L {1.1 US qt, 0.9 Imp qt}/min. [max]

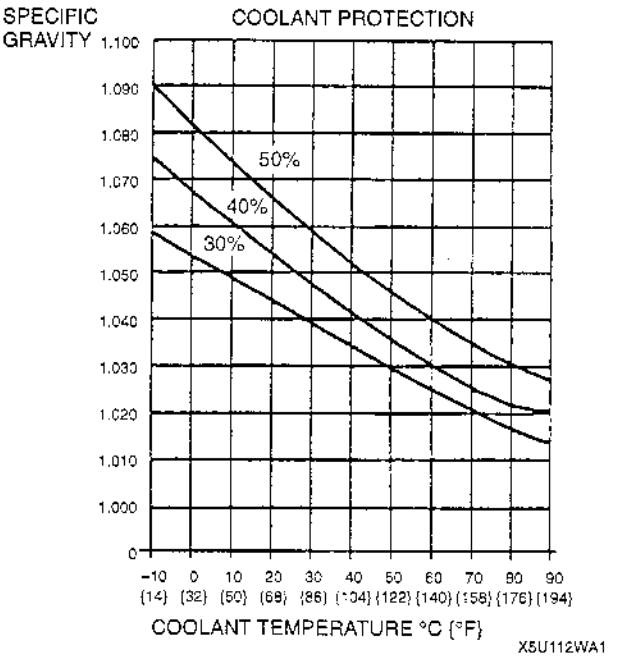

Antifreeze solution mixture percentage

Coolant protection	Volume percentage		Gravity at 20 °C {68°F}
	Water	Coolant	
Above −16 °C {3 °F}	65	35	1.054
Above −26 °C {−15 °F}	55	45	1.066
Above −40 °C {−40 °F}	45	55	1.078

8. Fill the coolant into the reservoir up to the FULL mark on the coolant reservoir.
9. Fully install the radiator cap.
10. Start the engine and warms up. If the coolant temperature becomes too high, stop the engine to prevent it from overheating.
11. After engine warms up, run it at approx. 2,500 rpm for 5 minutes.
12. Increase the engine speed to approx. 3,000 rpm for 5 seconds, then return to idle. Repeat several times.
13. Stop the engine and wait until it is cool. (Refer to 01–12 COOLING SYSTEM SERVICE WARNINGS.)
14. Inspect the coolant level. If it is low, repeat steps 7–12.
15. Inspect for the coolant leakage.

ENGINE COOLANT LEAKAGE INSPECTION

X5U112W04

1. Inspect the coolant level. (Refer to 01–12 ENGINE COOLANT LEVEL INSPECTION.)
2. Remove the radiator cap.
3. Connect a radiator cap tester and the **SST** to the radiator filler neck.

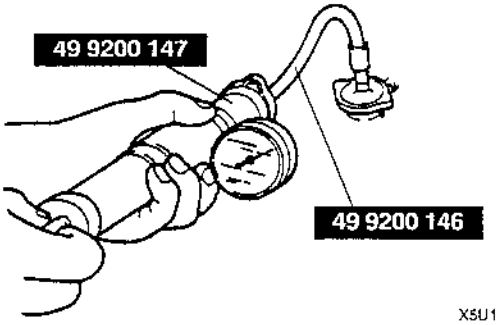

X5U112WA2

Caution

- **Applying more than 123 kPa {1.25 kgf/cm^2, 17.8 psi} can damage the hoses, fittings, and other components, and cause leaks.**

4. Apply pressure to the radiator.

   Pressure
   123 kPa {1.25 kgf/cm^2, 17.8 psi}

5. Verify that the pressure is held. If not, inspect the system for coolant leakage.

RADIATOR CAP INSPECTION

X5U112W05

1. Attach the radiator cap to a radiator cap tester with the **SST**. Apply pressure gradually.

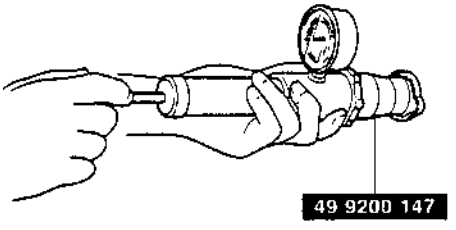

X5U112WA3

2. Verify that the pressure becomes stable within the specification.

   Pressure
   94—122 kPa
   {0.95—1.25 kgf/cm^2, 13.5—17.7 psi}

3. If the pressure is held for 10 seconds, the radiator cap is normal.

RADIATOR REMOVAL/INSTALLATION

X5U112W06

1. Disconnect the negative battery cable.
2. Drain the engine coolant. (Refer to 01–12 ENGINE COOLANT REPLACEMENT.)
3. Remove the air hose.
4. Remove in the order indicated in the table.
5. Install in the reverse order of removal.

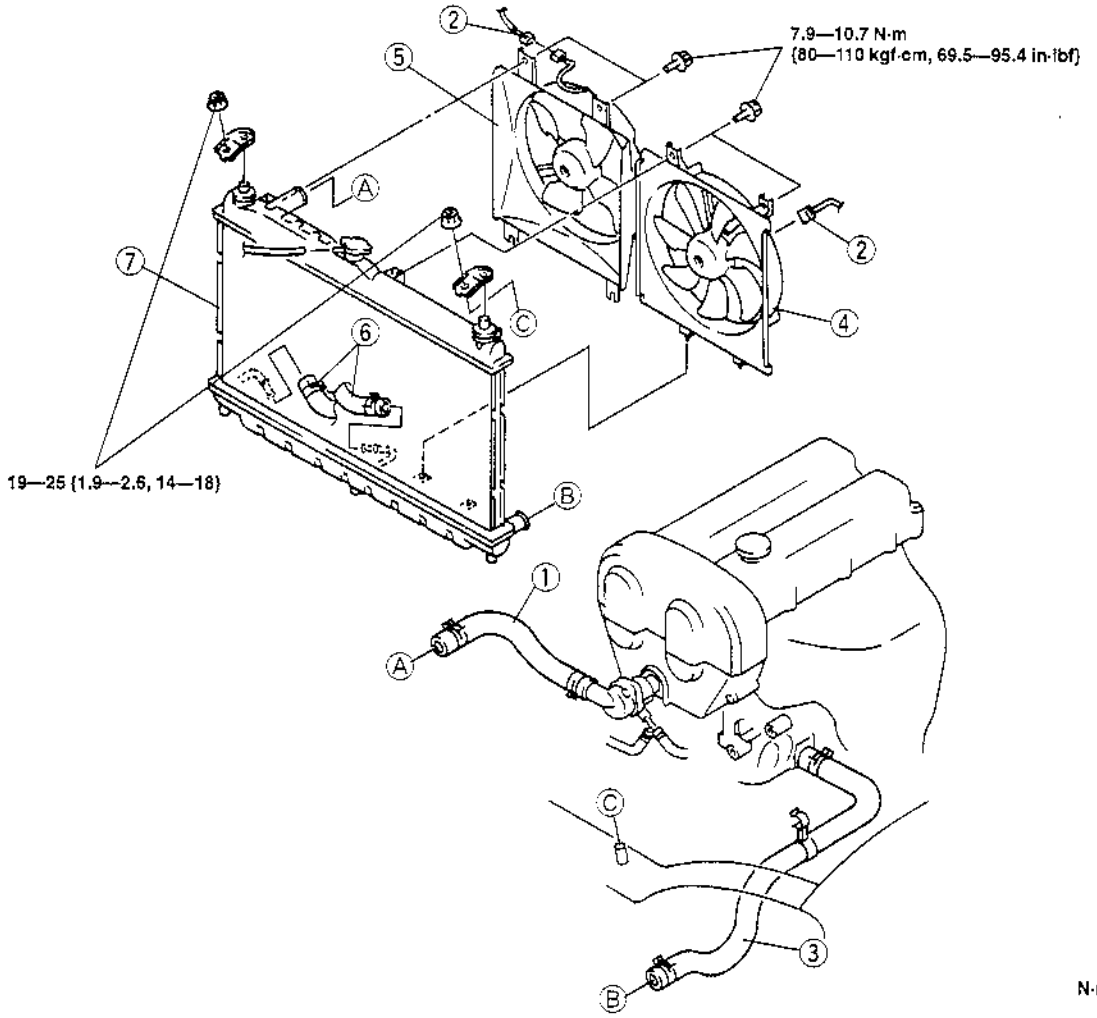

1	Upper radiator hose
2	Cooling fan motor connector and condenser fan motor connector
3	Lower radiator hose
4	Cooling fan

5	Condenser fan
6	Oil hose (AT) ☞ 05–13 OIL COOLER REMOVAL/INSTALLATION
7	Radiator

THERMOSTAT REMOVAL/INSTALLATION

X5U112W07

1. Disconnect the negative battery cable.
2. Remove the air hose.
3. Drain the engine coolant. (Refer to 01–12 ENGINE COOLANT REPLACEMENT.)
4. Remove in the order indicated in the table.
5. Install in the reverse order of removal.

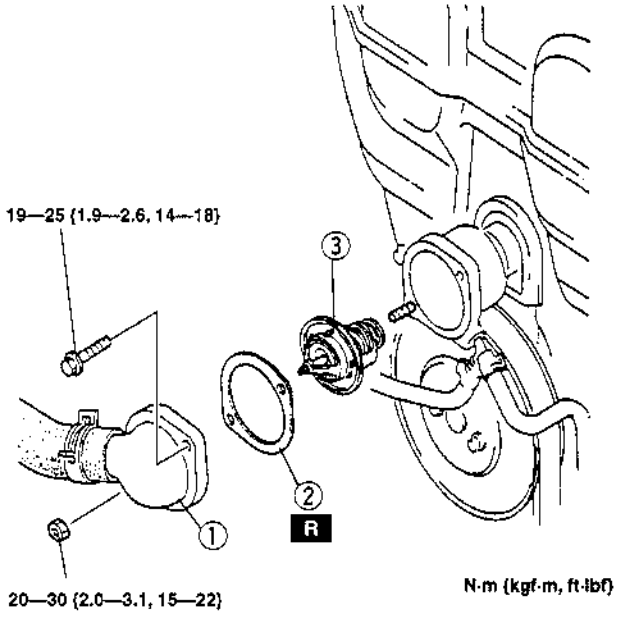

X5U112WA5

1	Thermostat cover
2	Thermostat cover gasket ☞ Installation Note
3	Thermostat ☞ Installation Note

Thermostat Installation Note

- Install the thermostat into the cylinder head with the jiggle pin at the top.

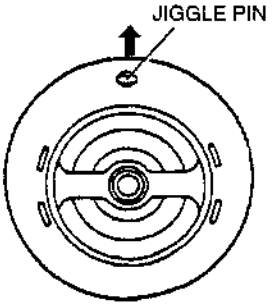

X5U112WA6

Thermostat Cover Gasket Installation Note

- Install a new gasket with the seal print side facing the cylinder head.

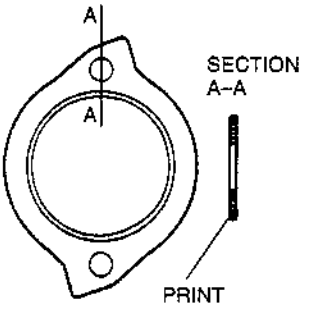

X5U112WA7

THERMOSTAT INSPECTION

X5U112W08

Inspect the thermostat for the following and replace as necessary.

- Open valve in room temperature
- Opening temperature and lift of the valve

Initial-opening temperature °C {°F}	83.5—88.0 {183—190}
Full-open temperature °C {°F}	100 {212}
Full-open lift mm {in}	8.5 {0.33} min.

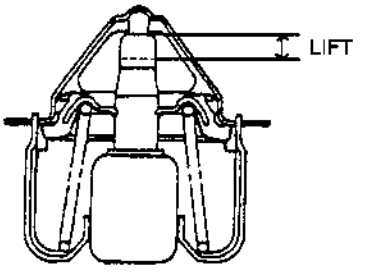

X5U112WA8

WATER PUMP REMOVAL/INSTALLATION

1. Remove the air cleaner.
2. Remove the timing belt. (Refer to 01–10 TIMING BELT REMOVAL/INSTALLATION.)
3. Remove in the order indicated in the table.
4. Install in the reverse order of removal.

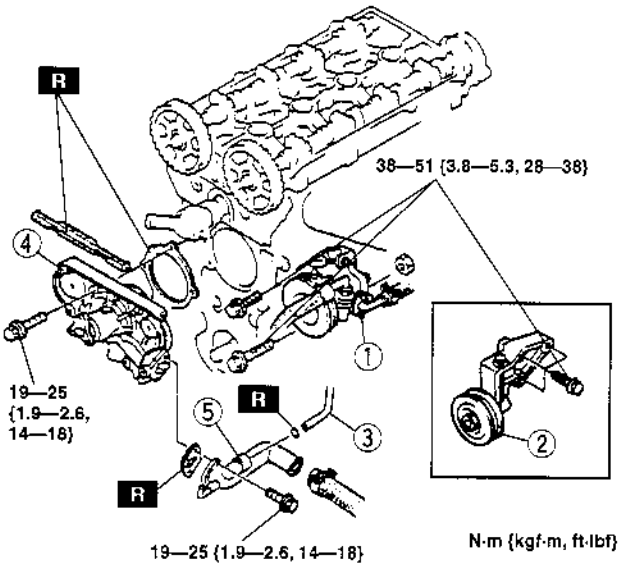

X5U112WA9

1	P/S oil pump ☞ Removal Note
2	Idler (without P/S oil pump)
3	Water hose
4	Water pump ☞ Installation Note
5	Water inlet pipe

X5U112W09

P/S Oil Pump Removal Note

- Remove the P/S oil pump with the oil hose still connected. Position the P/S oil pump so that it is out of the way.

Water Pump Installation Note

- Install the new rubber seal with the bonding agent.

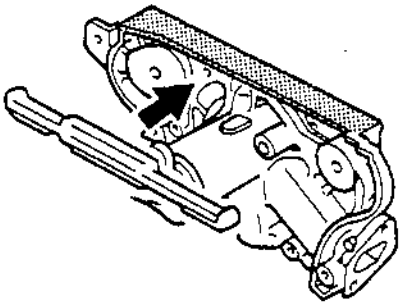

X5U112WAA

COOLING FAN MOTOR INSPECTION

X5U112W10

1. Verify that the battery is fully charged. (Refer to 01–17 BATTERY INSPECTION.)
2. Disconnect the cooling fan motor connector.
3. Connect battery positive voltage and an ammeter to the cooling fan motor connector.

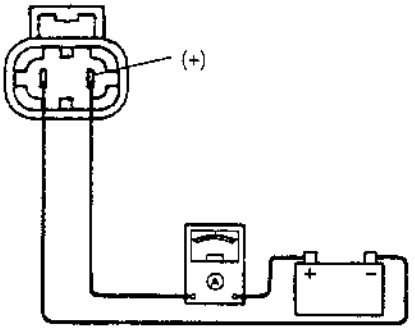

X5U112WAB

4. Verify that the cooling fan motor operates smoothly at the standard current draw.

Item	Engine
	BP
Current (A) [12 V]	4.50—6.49

5. If not as specified, replace the cooling fan motor.

COOLING FAN MOTOR REMOVAL/INSTALLATION

X5U112W11

1. Remove the cooling fan. (Refer to 01–12 RADIATOR REMOVAL/INSTALLATION.)
2. Remove in the order indicated in the table.
3. Install in the reverse order of removal.

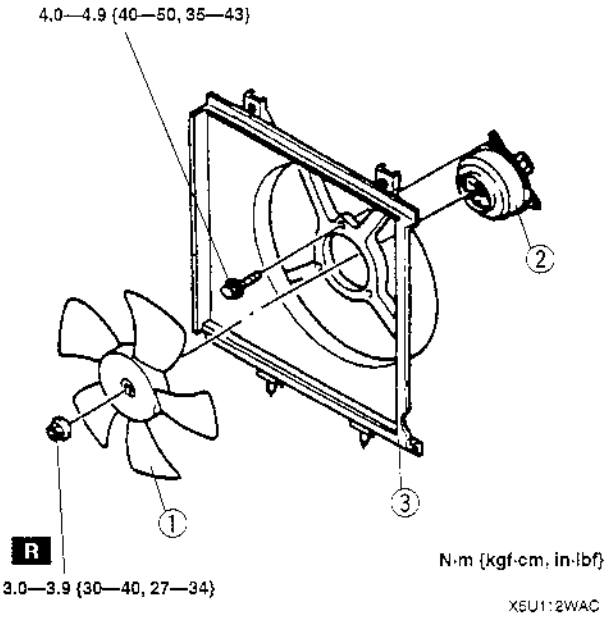

1	Cooling fan blade
2	Cooling fan motor
3	Radiator cowling

COOLING FAN RELAY INSPECTION

X5U112W12

1. Disconnect the negative battery cable.
2. Remove the cooling fan relay.

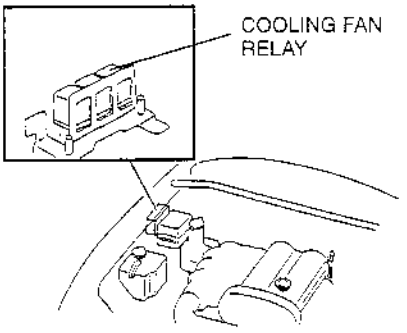

3. Apply battery positive voltage and inspect for continuity between terminals of the cooling fan relay by using an ohmmeter.

○—○ : Continuity

Step	Terminal			
	A	B	C	D
1	○	○		
2	B+	GND	○	○

X5U112WAE

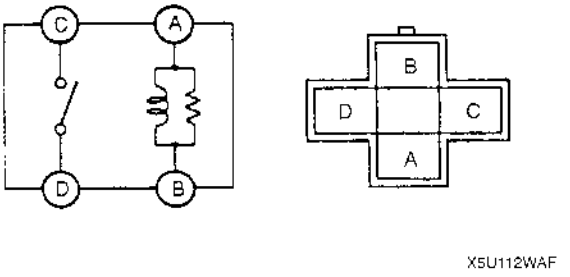

4. If not as specified, replace the cooling fan relay.

01–13 INTAKE-AIR SYSTEM

VACUUM HOSE ROUTING DIAGRAM

X5U113W01

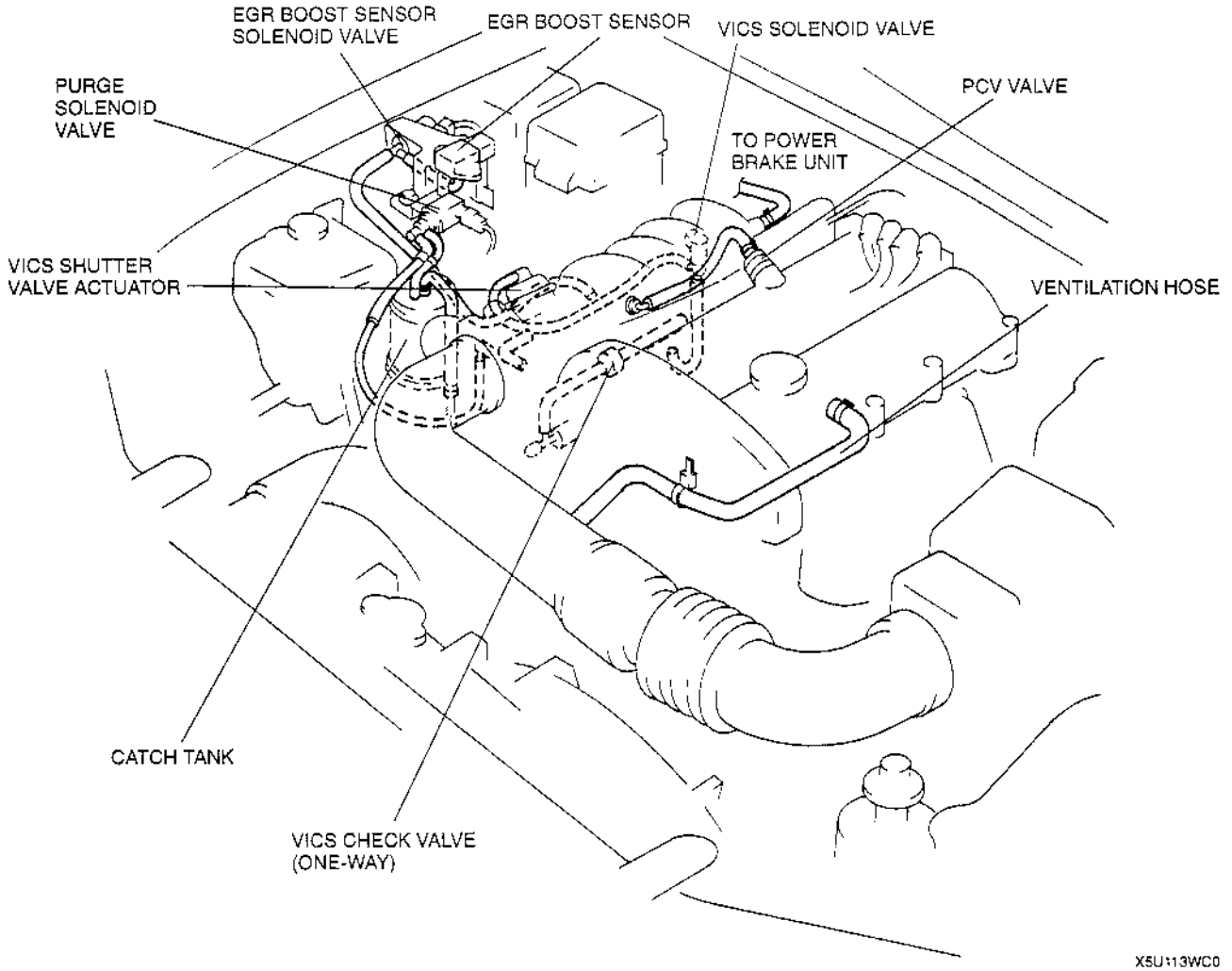

X5U113WC0

INTAKE-AIR SYSTEM REMOVAL/INSTALLATION

X5U113W02

Warning

- **When the engine and intake-air system are hot, they can badly burn. Turn off the engine and wait until they are cool before removing or installing the intake-air system.**

1. Disconnect the negative battery cable.
2. Drain the engine coolant from radiator. (Refer to 01–12 ENGINE COOLANT REPLACEMENT.)
3. Remove in the order indicated in the table.
4. Install in the reverse order of removal.
5. Refill the engine coolant to radiator. (Refer to 01–12 ENGINE COOLANT REPLACEMENT.)

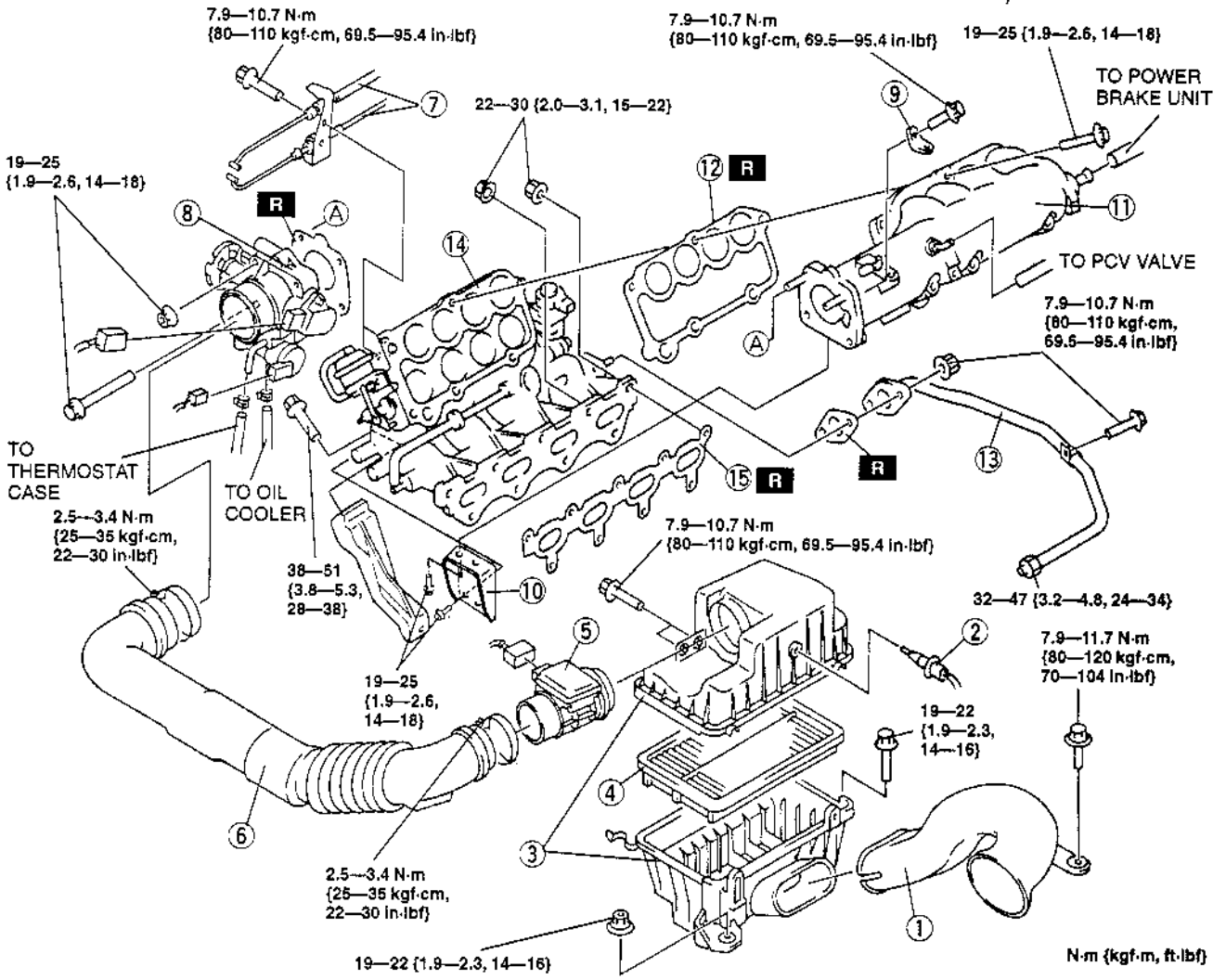

X5U113WC1

1	Fresh-air duct
2	Intake air temperature sensor
3	Air cleaner
4	Air cleaner element
5	Mass air flow sensor
6	Air hose
7	Accelerator cable (and throttle cable (AT only))
8	Throttle body
9	Dynamic chamber bracket ☞ Installation Note

10	Dynamic chamber stay ☞ Installation Note
11	Dynamic chamber
12	Dynamic chamber gasket ☞ Installation Note
13	EGR pipe
14	Intake manifold
15	Intake manifold gasket ☞ Installation Note

Intake Manifold Gasket Installation Note

- To install the intake manifold gasket, make sure that the convex side of the gasket is faced to the intake manifold side.

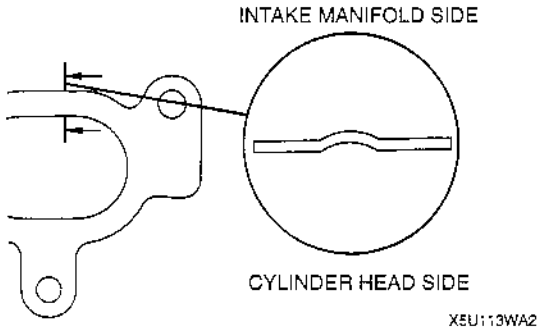

Dynamic Chamber Gasket Installation Note

- To install the dynamic chamber gasket, make sure that the convex side of the gasket is faced to the intake manifold side.

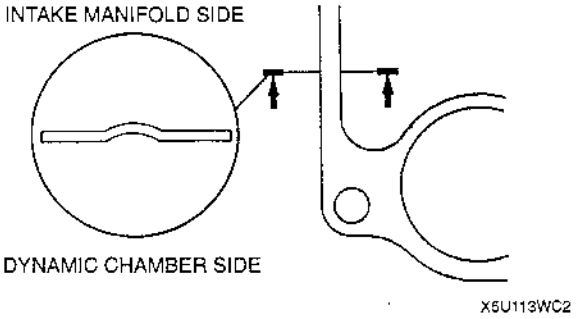

Dynamic Chamber Stay Installation Note

- Snugly tighten the bolts, then tighten the dynamic chamber side bolts before tightening the intake manifold side bolts.

Dynamic Chamber Bracket Installation Note

- Snugly tighten the bolts, then tighten the dynamic chamber side bolt before tightening the fuel distributor side bolt.

IDLE AIR CONTROL VALVE REMOVAL/INSTALLATION

X5U113W15

1. Disconnect the negative battery cable.
2. Remove the air hose and the throttle body. (Refer to 01–13 INTAKE-AIR SYSTEM REMOVAL/INSTALLATION.)
3. Disconnect the IAC valve connector.
4. Remove in the order indicated in the table.
5. Install in the reverse order of removal.

1	Bolt
2	IAC valve

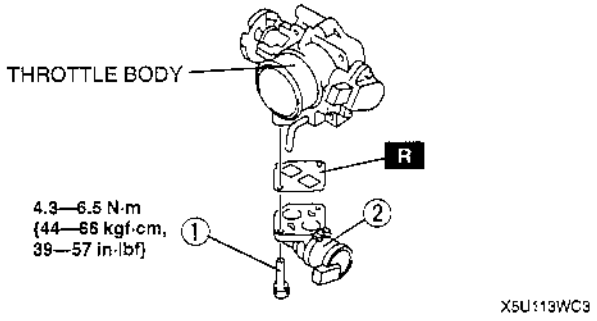

IDLE AIR CONTROL VALVE INSPECTION

X5U113W03

Simulation Test

1. Carry out the "Idle Air Control Inspection". (Refer to 01–01A ENGINE SYSTEM INSPECTION, Idle Air Control Inspection.)
2. If not as specified, perform the further inspection for the IAC valve.

Resistance Inspection

Note

- Perform the following test only when directed.

1. Disconnect the negative battery cable.
2. Disconnect the IAC valve connector.
3. Measure the resistance between the IAC valve terminals by using an ohmmeter.

Resistance
8.7—10.5 Ω (24 °C (75 °F))

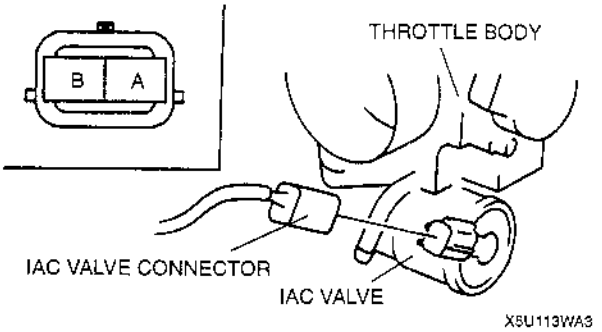

4. If not as specified, replace the IAC valve. (Refer to 01–13 IDLE AIR CONTROL VALVE REMOVAL/INSTALLATION.) If as specified but the Simulation Test is failed, inspect following:
   Open circuit
   - Power circuit (IAC valve connector terminal A and PCM connector terminal 3M.)
   - Ground circuit (IAC valve connector terminal B and PCM connector terminal 3O.)

   Short circuit
   - IAC valve connector terminal A and PCM connector terminal 3M to ground.
5. Remove the IAC valve, and inspect for any damage or clogging. Replace the IAC valve if not as specified. (Refer to 01–13 IDLE AIR CONTROL VALVE REMOVAL/INSTALLATION.)

VICS CHECK VALVE (ONE-WAY) REMOVAL/INSTALLATION

X5U113W16

1. Disconnect the negative battery cable.
2. Remove the air hose, throttle body, and dynamic chamber. (Refer to 01–13 INTAKE-AIR SYSTEM REMOVAL/INSTALLATION.)
3. Remove in the order indicated in the table.
4. Install in the reverse order of removal.

1	Vacuum hose
2	VICS check valve (one-way)

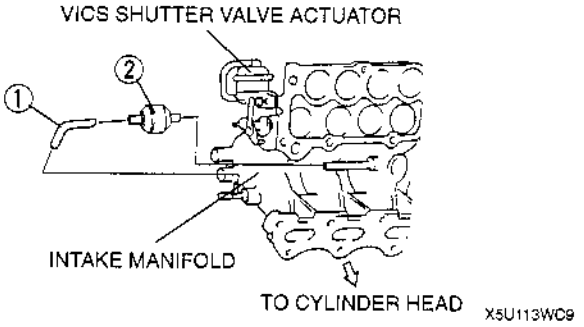

VICS CHECK VALVE (ONE-WAY) INSPECTION

X5U113W05

1. Remove the VICS check valve (one-way). (Refer to 01–13 VICS CHECK VALVE (ONE-WAY) REMOVAL/INSTALLATION.)
2. Blow through A and verify that the air flows from B.
3. Blow through B and verify that the air does not flow from A.
4. If not as specified, replace the VICS check valve (one-way).

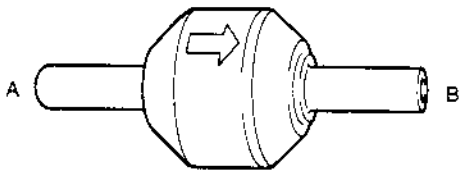

X5U113WA7

VICS SHUTTER VALVE ACTUATOR REMOVAL/INSTALLATION

X5U113W17

1. Disconnect the negative battery cable.
2. Remove the air hose, throttle body, and dynamic chamber. (Refer to 01–13 INTAKE-AIR SYSTEM REMOVAL/INSTALLATION.)
3. Remove in the order indicated in the table.
4. Install in the reverse order of removal.

1	E ring
2	Bolt
3	VICS shutter valve actuator

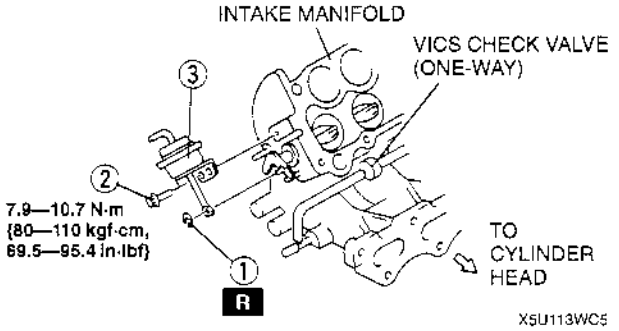

VICS SHUTTER VALVE ACTUATOR INSPECTION

X5U113W14

Simulation Test

1. Carry out the "VICS Operation Inspection". (Refer to 01–01A ENGINE SYSTEM INSPECTION, VICS Operation Inspection.)
2. If not as specified, perform the further inspection for the VICS shutter valve actuator.

Operation Inspection

Note
- Perform the following test only when directed.

1. Disconnect the vacuum hose from the VICS shutter valve actuator.
2. Connect a vacuum pump to the VICS shutter valve actuator.
3. Apply vacuum slowly and inspect the rod movement of the VICS shutter valve actuator under the following condition.

Vacuum kPa {mmHg, inHg}	Rod movement
Above –1.3 {–10, –0.4}	Not pulled
–1.3— –4.0 {–10— –30, –0.4— –1.1}	Start to move
Below –26 {–190, –7.5}	Fully pulled

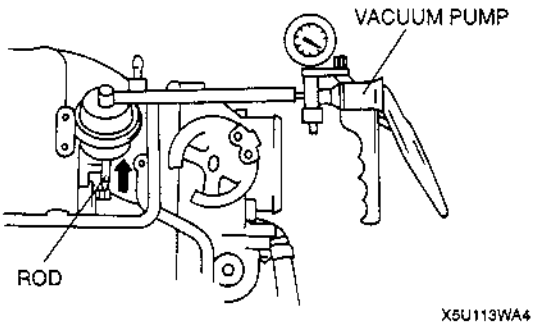

4. If not as specified, replace the VICS shutter valve actuator. (Refer to 01–13 VICS SHUTTER VALVE ACTUATOR REMOVAL/INSTALLATION.) If as specified but the Simulation Test is failed, inspect following:
Vacuum hose improper routing, kinks or leakage.

VICS SOLENOID VALVE REMOVAL/INSTALLATION

1. Disconnect the negative battery cable.
2. Disconnect the VICS solenoid valve connector.
3. Disconnect the vacuum hose from the VICS solenoid valve.

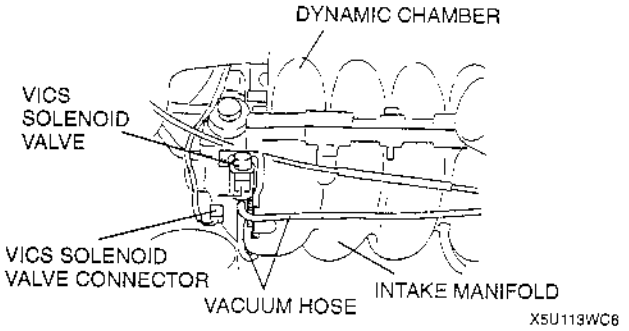

X5U113WC6

4. Remove in the order indicated in the table.

X5U113W18

5. Install in the reverse order of removal.

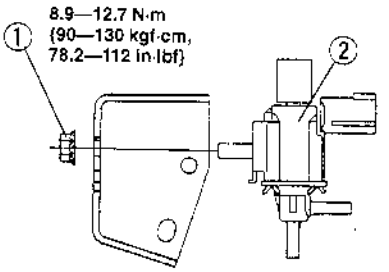

X5U113WC7

1	Nut
2	VICS solenoid valve

VICS SOLENOID VALVE INSPECTION

Simulation Test

1. Carry out the "VICS Operation Inspection". (Refer to 01–01A ENGINE SYSTEM INSPECTION, VICS Operation Inspection.)
2. If not as specified, perform the further inspection for the VICS solenoid valve.

Airflow Inspection

Note
- Perform the following test only when directed.

1. Remove the VICS solenoid valve.
2. Inspect for airflow between each port under the following condition.

○—○ : Continuity ○═○ : Airflow

Step	Terminal		Port		
	A	B	A	B	C
1	○—○			○═○	
2	B+	GND	○═○		

X5U113WB1

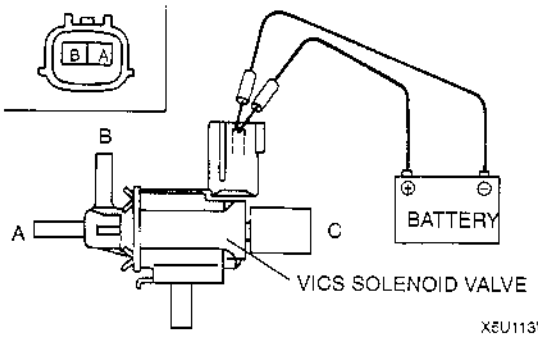

X5U113WC8

X5U113W11

3. If not as specified, replace the VICS solenoid valve. If as specified but the Simulation Test is failed, inspect following:
Vacuum hose improper routing, kinks or leakage.
Open circuit
- Power circuit (VICS solenoid valve connector terminal A and main relay connector terminal D through common connector.)
- Ground circuit (VICS solenoid valve connector terminal B and PCM connector terminal 3Q.)

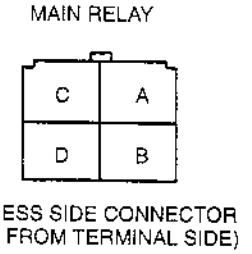

X5U113WD2

Short circuit
- VICS solenoid valve connector terminal A and main relay connector terminal D through common connector to ground.

ACCELERATOR PEDAL REMOVAL/INSTALLATION

X5U113W12

1. Remove in the order indicated in the table.
2. Install in the reverse order of removal.

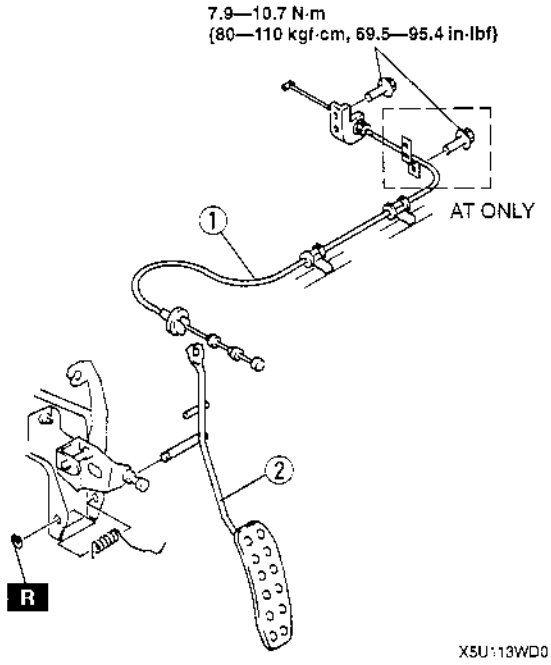

X5U113WD0

1	Accelerator cable ☞ Installation Note
2	Accelerator pedal

Accelerator Cable Installation Note

- Carry out the "ACCELERATOR CABLE INSPECTION/ADJUSTMENT" procedure after installing the accelerator cable.

ACCELERATOR CABLE INSPECTION/ADJUSTMENT

X5U113W13

1. Verify that the throttle valve is at the closed throttle position.
2. Measure the free play of the accelerator cable.

   Free play
   1—3 mm {0.04—0.11 in}

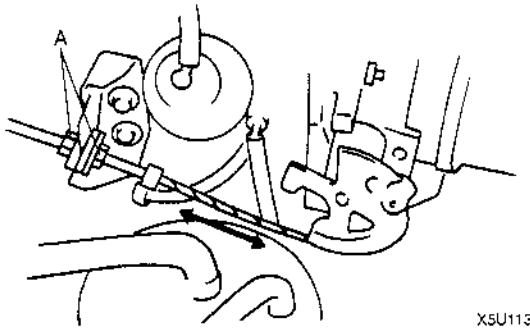

X5U113WD1

3. If not within the specification, adjust by turning locknuts A.

   Tightening torque
   9.8—14 N·m {1.0—1.5 kgf·m, 7.3—10 ft·lbf}

01–14 FUEL SYSTEM

BEFORE REPAIR PROCEDURE

X5U114W01

Warning

- **Fuel vapor is hazardous. It can easily ignite, causing serious injury and damage. Always keep sparks and flames away from fuel.**

Warning

- **Fuel line spills and leaks are dangerous. Fuel can ignite and cause serious injuries or death and damage. Fuel can also irritate skin and eyes. To prevent this, always complete the following "Fuel Line Safety Procedure".**

Note

- Fuel in the fuel system is under high pressure when the engine is not running.

Fuel Line Safety Procedure

1. Remove the fuel-filler cap and release the pressure in the fuel tank.
2. Disconnect the fuel pump relay connector (6-pin type connector: 4 terminal) located above the accelerator pedal.

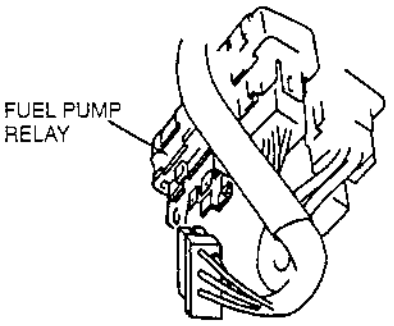

X5U114WA0

3. Start the engine.
4. After the engine stalls, crank the engine several times.
5. Turn the ignition switch off.
6. Install the fuel pump relay.

AFTER REPAIR PROCEDURE

Warning

- **Fuel line spills and leaks are dangerous. Fuel can ignite and cause serious injuries or death and damage. When installing the fuel hose, observe "Fuel Hose Installation" and "Fuel Leakage Inspection" described below.**

Fuel Hose Installation

1. Replace damaged or deformed fuel hoses, fuel pipes, and hose clamps.
2. When installing the fuel hose onto the fuel pipe, fit the hose onto the pipe over **25 mm {1.00 in}**. When the pipe has a stopper, fit the hose until it contacts the stopper.

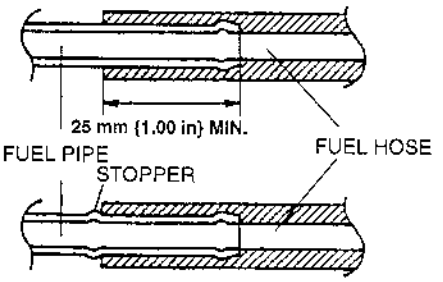

W6U114WA1

3. Install a hose clamp over the fuel hose within the clamp installation range as shown, avoiding the original clamp position.

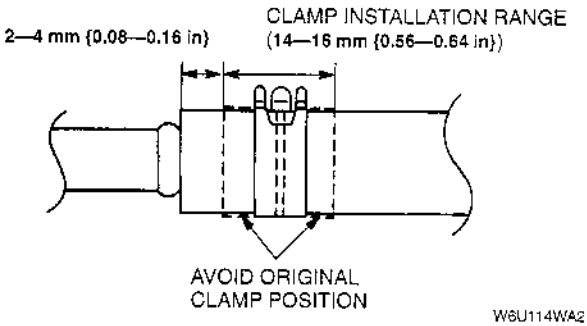

W6U114WA2

4. When installing two clamps, their tabs must be positioned **more than 45° (desired 180°)** apart.

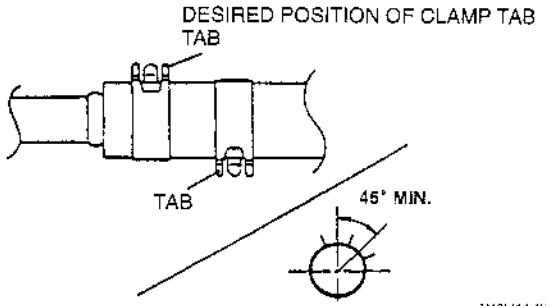

W6U114WA3

X5U114W02

Fuel Leakage Inspection

Warning

- **Fuel line spills and leaks are dangerous. Fuel can ignite and cause serious injuries or death and damage. Always carry out the following procedure with the engine stopped.**

Caution

- **Connecting the wrong data link connector terminals may possibly cause a malfunction. Carefully connect the specified terminals only.**

1. Connect data link connector terminals F/P and GND by using a jumper wire.

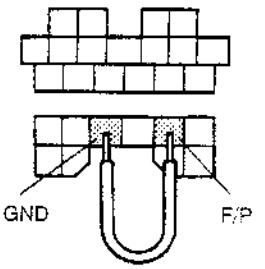

X5U114WA1

2. Turn the ignition switch to ON to operate the fuel pump.
3. Pressurize the system this way for **at least 5 minutes** to be sure of no leakage.
4. If there is fuel leakage, inspect for damaged fuel hoses, hose clamps, and fuel pipe sealing surface and replace as necessary.
5. After repair, assemble the system and repeat steps 1 to 3.

FUEL TANK REMOVAL/INSTALLATION

X5U114W03

Warning

- **Repairing a fuel tank that has not been properly steam cleaned can be dangerous. Explosion or fire may cause death or serious injury. Always properly steam clean a fuel tank before repairing it.**

1. Complete the "BEFORE REPAIR PROCEDURE". (Refer to 01–14 BEFORE REPAIR PROCEDURE.)
2. Disconnect the negative battery cable.
3. Siphon the fuel from the fuel tank. (Refer to Fuel Drawing Note.)
4. Remove the middle pipe. (Refer to 01–15 EXHAUST SYSTEM REMOVAL/INSTALLATION.)
5. Remove the propeller shaft. (Refer to 03–15 PROPELLER SHAFT REMOVAL/INSTALLATION.)
6. Remove the power plant frame. (Refer to 05–11 MANUAL TRANSMISSION REMOVAL/INSTALLATION.) (Refer to 05–13 AUTOMATIC TRANSMISSION REMOVAL/INSTALLATION.)
7. Remove in the order indicated in the table.
8. Install in the reverse order of removal.
9. Complete the "AFTER REPAIR PROCEDURE". (Refer to 01–14 AFTER REPAIR PROCEDURE.)

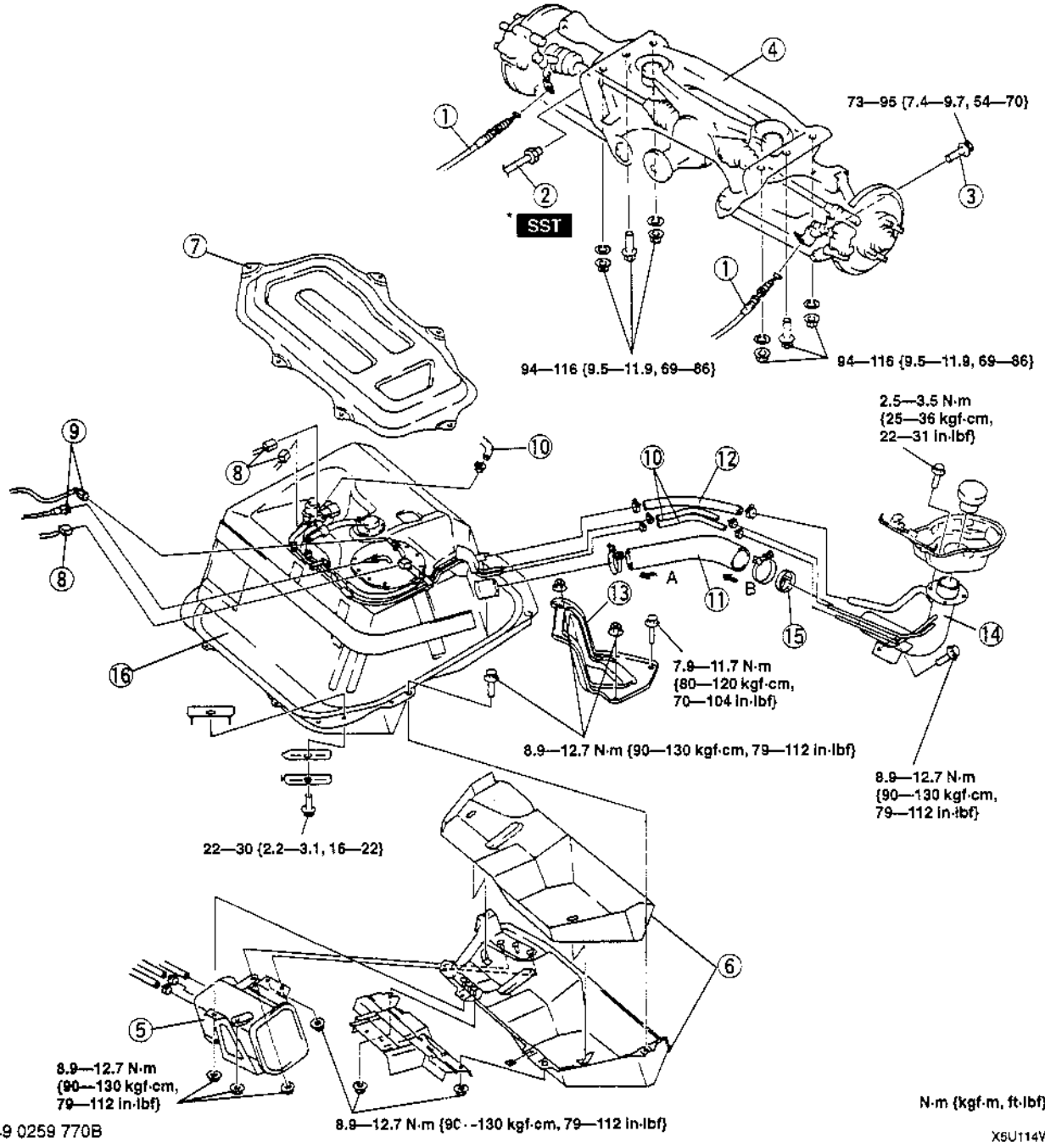

* 49 0259 770B

X5U114WA2

1	Parking brake cable ☞ 04–12 PARKING BRAKE CABLE (LEVER TYPE) REMOVAL/INSTALLATION
2	Brake pipe ☞ 04–11 AIR BLEEDING
3	Shock absorber bolt
4	Rear crossmember component ☞ Removal Note
5	Charcoal canister
6	Fuel tank insulator
7	Service hole cover
8	Connector
9	Plastic fuel hose ☞ Disassembly Note ☞ Assembly Note
10	Evaporative hose ☞ Installation Note
11	Joint hose ☞ Installation Note
12	Breather hose ☞ Installation Note
13	Dust cover
14	Fuel-filler pipe
15	Nonreturn valve ☞ Installation Note
16	Fuel tank

Fuel Drawing Note

1. Remove the fuel-filler cap and insert a hose into the fuel tank through the fuel-filler pipe.
2. Siphon the fuel into a container by using a fuel drawing pump.

Note

- To make work easier, prepare a hose of following size.

Specification

Outer diameter: 13 mm {0.51 in}
Length: 2160 mm {85.0 in} or longer

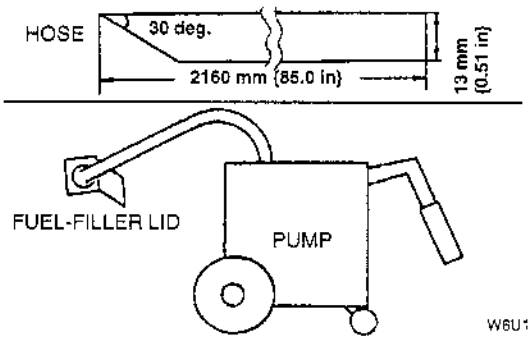

Rear Crossmember Component Removal Note

1. Support the rear crossmember component by using a transmission jack.
2. Remove the rear crossmember mounting bolts and nuts.
3. Lower the rear crossmember component.

Plastic Fuel Hose Disassembly Note

Caution

- **The retainer must be replaced if removed from the fuel pipe without using the SST. Otherwise, effectiveness of the retainer will be reduced.**

1. Inspect that the quick release connector joint area is free of foreign materials. Clean as necessary.
2. Set the **SST** as shown and push into the quick release connector to disconnect the plastic fuel hose.

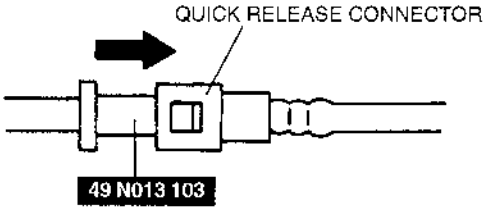

X5U114WC5

3. Cover the disconnected quick release connector and fuel pipe to prevent them from being scratched or contaminated with foreign materials.

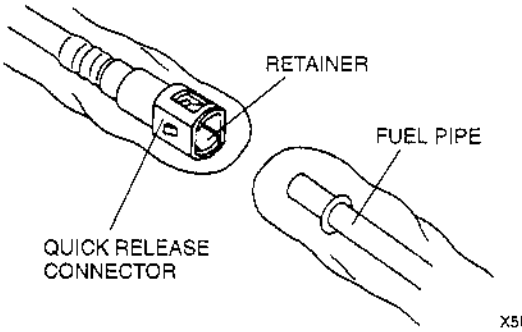

X5U114WC6

Nonreturn Valve Installation Note

- Align the nonreturn valve with the notch in the fuel-filler pipe as shown, then install.

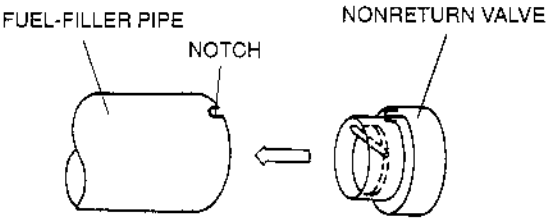

W6U114WA7

Breather Hose, Evaporative Hose Installation Note

- Fit each hose onto the respective fittings within specification, and install clamps as shown.

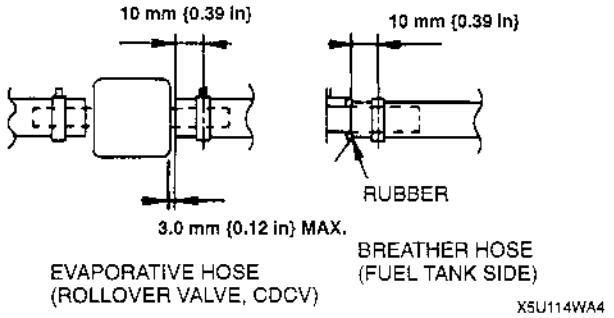

Joint Hose Installation Note

- Fit the joint hose onto the respective fittings within specification, and install clamps as shown.

VIEW A

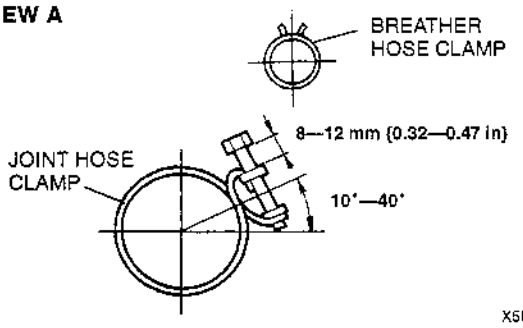

FUEL TANK SIDE

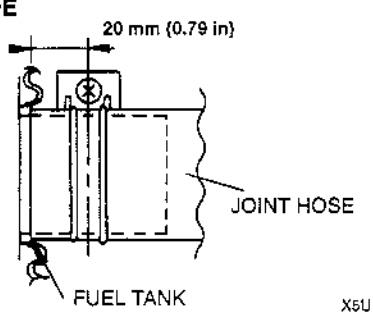

VIEW B

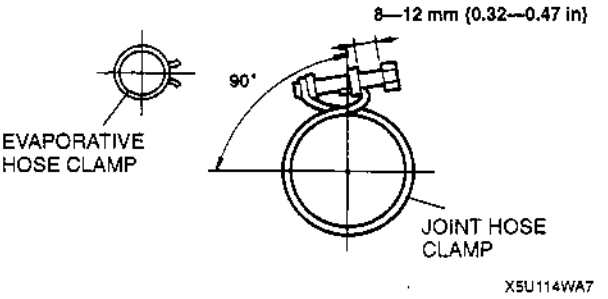

FUEL-FILLER PIPE SIDE

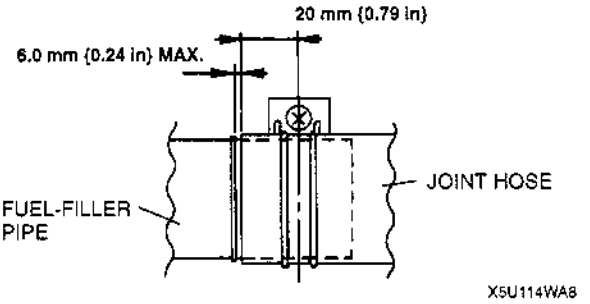

Plastic Fuel Hose Assembly Note

1. Inspect that the inside of the fuel pipe and the quick release connector is free of foreign materials and damage. Clean as necessary, taking care not to damage the sealing surfaces.
2. Push the quick release connector into the fuel pipe until a click is heard.

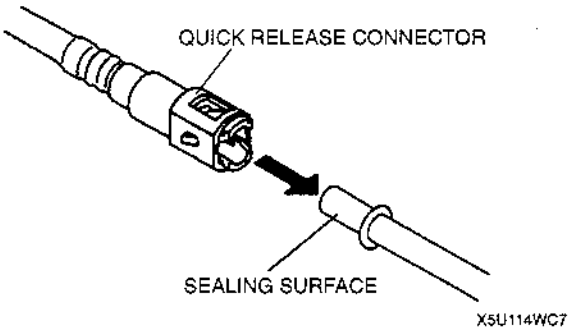

3. Pull the quick release connector by hand and verify that it is installed securely.

NONRETURN VALVE INSPECTION

X5U114W04

1. Remove the fuel-filler pipe. (Refer to 01–14 FUEL TANK REMOVAL/INSTALLATION.)
2. Verify that the projection on the nonreturn valve is aligned with the notch on the fuel-filler pipe.

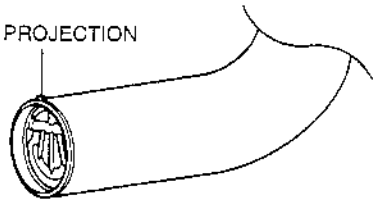

W6U114WB7

3. If not, remove the nonreturn valve and align the projection with the notch, then reinstall.
4. Verify that the nonreturn valve is closed when the fuel-filler pipe end is held up vertically.
5. If it opens, replace the nonreturn valve.
6. Verify that the nonreturn valve opens under its own weight when the fuel-filler pipe end is held down vertically.

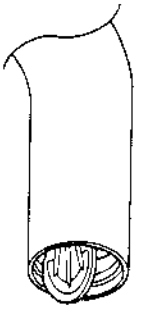

W6U114WB8

7. If it does not open, replace the nonreturn valve.

FUEL PUMP REMOVAL/INSTALLATION

X5U114W05

1. Complete the "BEFORE REPAIR PROCEDURE". (Refer to 01–14 BEFORE REPAIR PROCEDURE.)
2. Disconnect the negative battery cable.
3. Uncover the rear package trim.
4. Remove the service hole cover.
5. Remove in the order indicated in the table.
6. Install in the reverse order of removal.
7. Complete the "AFTER REPAIR PROCEDURE". (Refer to 01–14 AFTER REPAIR PROCEDURE.)

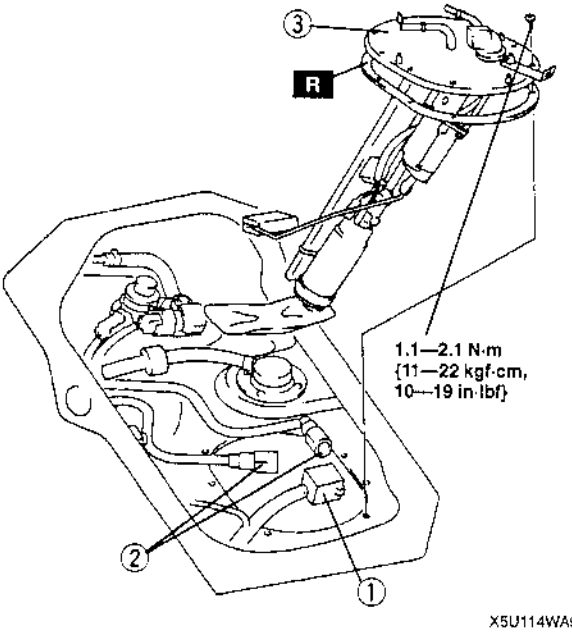

X5U114WA9

1	Connector
2	Plastic fuel hose ☞ 01–14 FUEL TANK REMOVAL/INSTALLATION, Plastic Fuel Hose Disassembly Note ☞ 01–14 FUEL TANK REMOVAL/INSTALLATION, Plastic Fuel Hose Assembly Note
3	Fuel pump

FUEL PUMP DISASSEMBLY/ASSEMBLY

1. Disassemble in the order indicated in the table.
2. Assemble in the reverse order of disassembly.

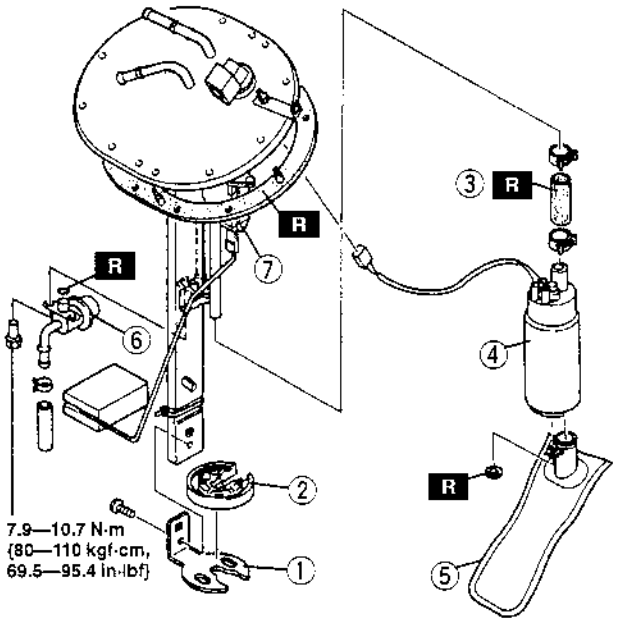

X5U114WAA

1	Bracket
2	Rubber mount
3	Fuel hose ☞ Assembly Note
4	Fuel pump ☞ Assembly Note
5	Fuel filter (low-pressure)
6	Pressure regulator
7	Fuel gauge sender unit

X5U114W06

Fuel Pump Assembly Note

- After installing the fuel pump to the bracket, pull the pump down so that it is tight against the bracket and there is no gap.

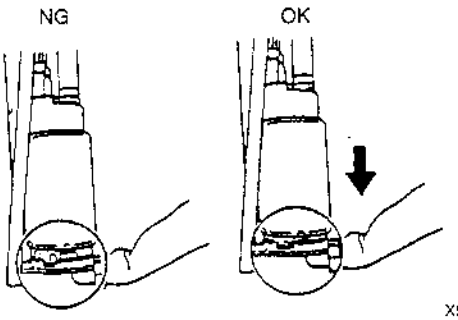

X5U114WAB

Fuel Hose Assembly Note

1. Do not apply excessive side force when pushing the fuel hose onto the fuel pump nipple.

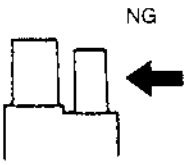

X5U114WBF

2. Install the clamps as shown.

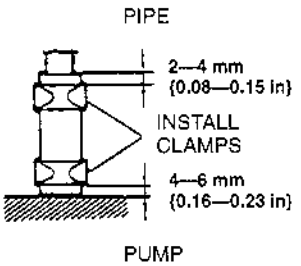

X5U114WAC

FUEL PUMP INSPECTION

Simulation Test

1. Carry out the "Fuel Pump Operation Inspection", "Fuel Pump Control Inspection". (Refer to 01–01A ENGINE SYSTEM INSPECTION, Fuel Pump Operation Inspection.) (Refer to 01–01A ENGINE SYSTEM INSPECTION, Fuel Pump Control Inspection.)
2. If not as specified, perform the further inspection for the fuel pump.

Continuity Inspection

Note
- Perform the following test only when directed.

1. Disconnect the negative battery cable.
2. Remove the service hole cover.
3. Disconnect the fuel pump connector.
4. Inspect for continuity between fuel pump connector terminals B and D.

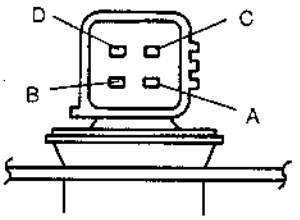

X5U114WAD

5. If there is no continuity, replace the fuel pump. If as specified but the Simulation Test is failed, inspect following:
   Fuel pump relay malfunction
   Open circuit
   - Ground circuit (Fuel pump connector terminal D and body ground)
   - Power circuit (Fuel pump relay connector terminal C and fuel pump connector terminal B through common connector)

FUEL PUMP RELAY

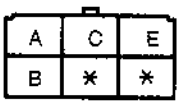

HARNESS SIDE CONNECTOR
(VIEW FROM TERMINAL SIDE)

X5U114WCC

Short circuit
- Fuel pump relay connector terminal C and fuel pump connector terminal B through common connector to ground.

6. Reconnect the fuel pump connector.

X5U114W07

Fuel Pump Maximum Pressure Inspection

Warning
- **Fuel line spills and leaks are dangerous. Fuel can ignite and cause serious injuries or death and damage. Always carry out the following procedure with the engine stopped.**

1. Complete the "BEFORE REPAIR PROCEDURE". (Refer to 01–14 BEFORE REPAIR PROCEDURE.)
2. Disconnect the negative battery cable.
3. Lift up the vehicle with safety stands.
4. Remove the fuel filter cover.
5. Inspect that the quick release connector joint area is free of foreign materials. Clean as necessary.
6. Set the **SST** to the fuel filter outlet pipe and push into the quick release connector and disconnect the fuel pipe.

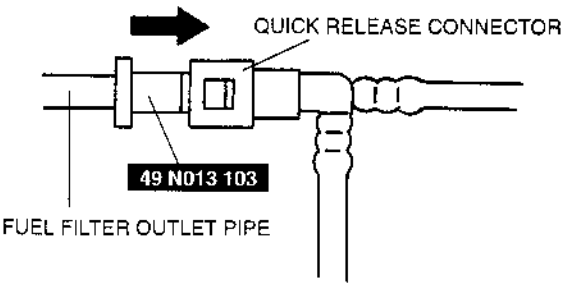

X5U114WB2

Caution
- **Removing the retainer from the disconnected fuel pipe will reduce the effectiveness of the retainer. The retainer must be replaced when any of the following applies.**
  1. **Scratches or damage is observed on the retainer.**
  2. **Fuel pipe has been replaced.**
  3. **Fuel filter (high-pressure) has been replaced.**

7. If removal of the retainer is required, remove it by squeezing the tabs of the retainer.
8. Cover the disconnected quick release connector to prevent them from being scratched or contaminated with foreign materials.
9. Turn the lever as shown to plug the **SST** outlet. Push the **SST** into the fuel filter outlet pipe until a click is heard.
10. Connect a fuel hose and clamp to the **SST** outlet pipe. Set the fuel hose into a container to avoid fuel spills.

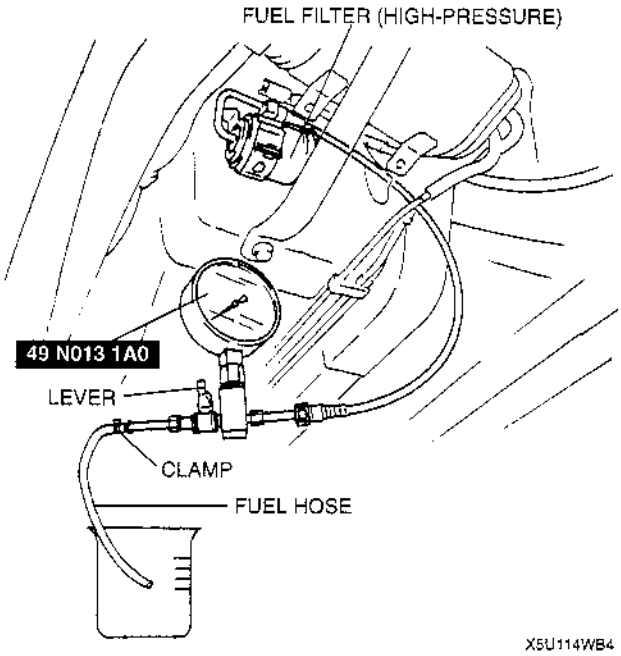

11. Pull the quick release connector by hand and verify that it is installed securely.
12. Connect the negative battery cable.

Caution
- **Connecting the wrong data link connector terminals may possibly cause a malfunction. Carefully connect the specified terminals only.**

13. Connect data link connector terminals F/P and GND by using a jumper wire.

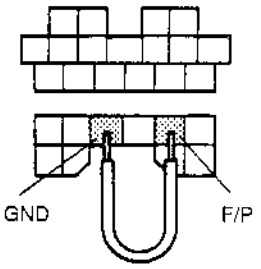

14. Turn the ignition switch to ON to operate the fuel pump. Measure the fuel pump maximum pressure.

Fuel pump maximum pressure
Less than 640 kPa {6.5 kgf/cm^2, 92 psi}

15. Turn the ignition switch off and disconnect the jumper wire.
16. If not as specified, inspect following:
    - Fuel pump
    - Fuel pump relay
    - Fuel filter for clogging
    - Fuel line for clogging or leakage
17. Disconnect the **SST**. Inspect the fuel pipe for kinks. Replace the fuel pipe if necessary.
18. Inspect that the inside of the fuel filter outlet pipe and the quick release connector is free of foreign materials and damage. Clean as necessary, taking care not to damage the sealing surfaces.
19. Push the fuel pipe into the fuel filter outlet pipe until a click is heard.
20. Pull the quick release connector by hand and verify that it is installed securely.
21. Complete the "AFTER REPAIR PROCEDURE". (Refer to 01–14 AFTER REPAIR PROCEDURE.)

Fuel Pump Hold Pressure Inspection

Warning
- **Fuel line spills and leaks are dangerous. Fuel can ignite and cause serious injuries or death and damage. Always carry out the following procedure with the engine stopped.**

1. Complete the "BEFORE REPAIR PROCEDURE". (Refer to 01–14 BEFORE REPAIR PROCEDURE.)
2. Disconnect the negative battery cable.
3. Lift up the vehicle with safety stands.
4. Remove the fuel filter cover.
5. Inspect that the quick release connector joint area is free of foreign materials. Clean as necessary.
6. Set the **SST** to the fuel filter outlet pipe and push into the quick release connector and disconnect the fuel pipe.

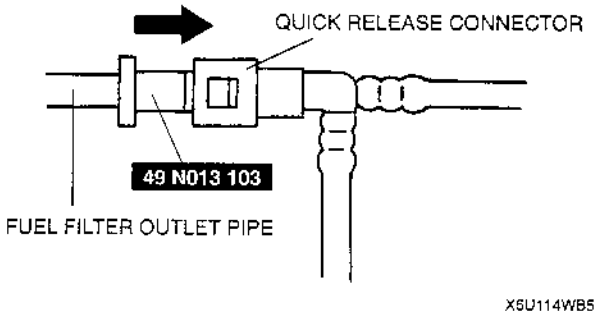

Caution
- **Removing the retainer from the disconnected fuel pipe will reduce the effectiveness of the retainer. The retainer must be replaced when any of the following applies.**
  1. **Scratches or damage is observed on the retainer.**
  2. **Fuel pipe has been replaced.**
  3. **Fuel filter (high-pressure) has been replaced.**

7. If removal of the retainer is required, remove it by squeezing the tabs of the retainer.
8. Cover the disconnected quick release connector to prevent them from being scratched or contaminated with foreign materials.

9. Turn the lever as shown to plug the **SST** outlet. Push the **SST** into the fuel filter outlet pipe until a click is heard.
10. Connect a fuel hose and clamp to the **SST** outlet pipe. Set the fuel hose into a container to avoid fuel spills.

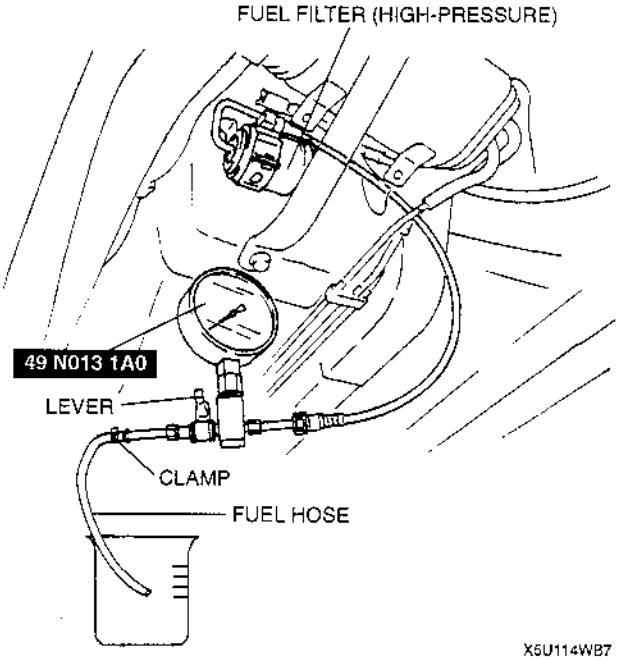

11. Pull the quick release connector by hand and verify that it is installed securely.
12. Connect the negative battery cable.

Caution

- **Connecting the wrong data link connector terminals may possibly cause a malfunction. Carefully connect the specified terminals only.**

13. Connect data link connector terminals F/P and GND by using a jumper wire.

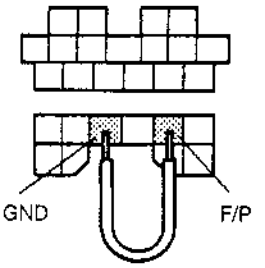

14. Turn the ignition switch to ON for **10 seconds** to operate the fuel pump.
15. Turn the ignition switch off. Measure the fuel pump hold pressure **after 5 minutes.**

    Fuel pump hold pressure
    More than 340 kPa {3.5 kgf/cm^2, 50 psi}

16. Disconnect the jumper wire.
17. If not as specified, replace the fuel pump.
18. Disconnect the **SST**. Inspect the fuel pipe for kinks. Replace the fuel pipe if necessary.
19. Inspect that the inside of the fuel filter outlet pipe and the quick release connector is free of foreign materials and damage. Clean as necessary, taking care not to damage the sealing surfaces.
20. Push the fuel pipe into the fuel filter outlet pipe until a click is heard.
21. Pull the quick release connector by hand and verify that it is installed securely.
22. Complete the "AFTER REPAIR PROCEDURE". (Refer to 01–14 AFTER REPAIR PROCEDURE.)

FUEL FILTER (HIGH-PRESSURE) REMOVAL/INSTALLATION

X5U114W08

1. Complete the "BEFORE REPAIR PROCEDURE". (Refer to 01–14 BEFORE REPAIR PROCEDURE.)
2. Disconnect the negative battery cable.
3. Raise the rear of the vehicle and support it with safety stands.
4. Remove the fuel filter protector.
5. Remove in the order indicated in the table.
6. Install in the reverse order of removal.
7. Complete the "AFTER REPAIR PROCEDURE". (Refer to 01–14 AFTER REPAIR PROCEDURE.)

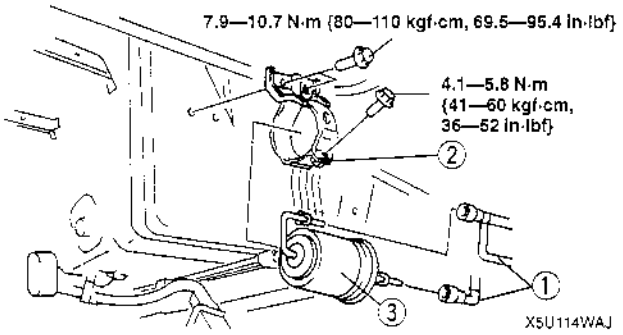

1	Plastic fuel hose ☞ Disassembly Note ☞ Assembly Note
2	Fuel filter bracket
3	Fuel filter (high-pressure) ☞ Removal Note ☞ Installation Note

Plastic Fuel Hose Disassembly Note

1. Inspect that the quick release connector joint area is free of foreign materials. Clean as necessary.
2. Squeeze the tabs of the retainer and disconnect the quick release connector.

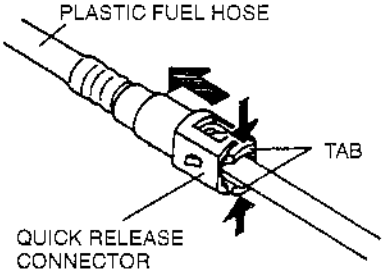

3. Cover the disconnected quick release connector and fuel pipe to prevent them from being scratched or contaminated with foreign materials.

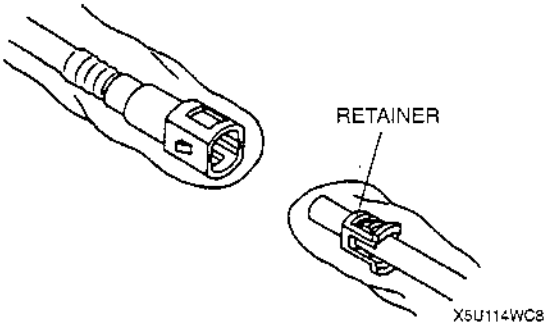

Caution

- **Removing the retainer from the disconnected fuel pipe will reduce the effectiveness of the retainer. The retainer must be replaced when any of the following applies.**
  1. **Retainer has been removed.**
  2. **Scratches or damage is observed on the retainer.**
  3. **Plastic fuel hose has been replaced.**
  4. **Fuel filter (high-pressure) has been replaced.**

4. If removal of the retainer is required, remove it in the following procedure.

Caution

- **Removing the retainer by using a tool can damage the fuel pipe and cause fuel leakage. Remove the retainer by opening the tabs outward by hand.**

(1) Open the tabs of the retainer outward.
(2) Remove and discard the retainer.

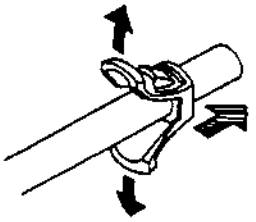

X5U114WC9

Fuel Filter (High-pressure) Removal Note

- Before removing the fuel filter, paint mark the fuel filter and fuel filter bracket for correct reassembly.

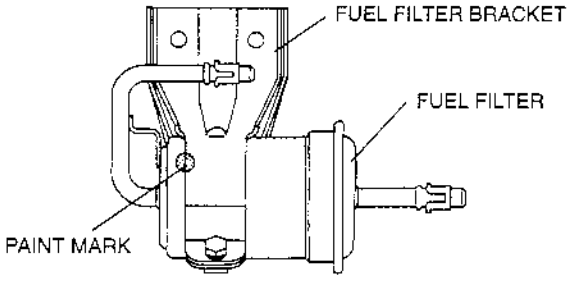

X5U114WC2

Fuel Filter (High-pressure) Installation Note
Replacing the fuel filter:

1. Paint mark the new fuel filter on the same spot as the removed fuel filter.
2. Align the paint marks and install the fuel filter.

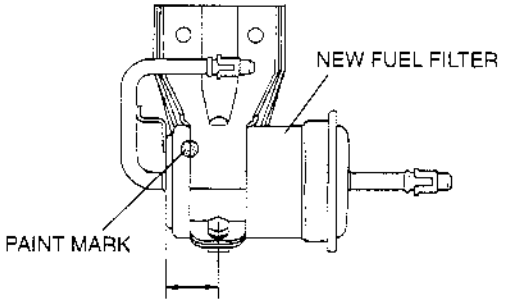

30.5 mm (1.20 in)

X5U114WC3

Replacing the fuel filter bracket:

1. Paint mark the new fuel filter bracket on the same spot as the removed fuel filter bracket.
2. Align the paint marks and install the fuel filter bracket.

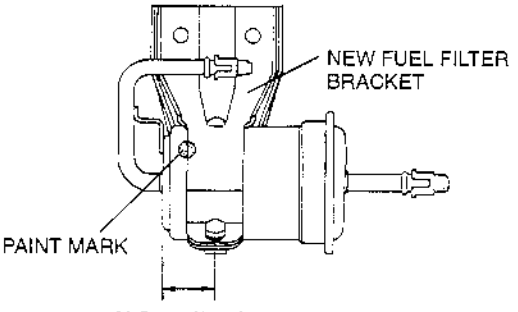

30.5 mm (1.20 in)

X5U114WC4

Plastic Fuel Hose Assembly Note

1. When the retainer is not removed, observe the following procedure.
   (1) Inspect the plastic fuel hose for kinks. Replace if necessary.
   (2) Inspect that the inside of the fuel pipe and the quick release connector is free of foreign materials and damage. Clean as necessary, taking care not to damage the sealing surfaces.
   (3) Align the fuel pipe and quick release connector so that the tabs of the retainer are correctly fitted into the quick release connector. Push the quick release connector into the retainer until a click is heard.

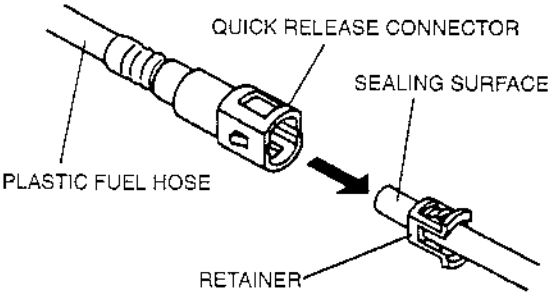

X5U114WCA

   (4) Pull the quick release connector by hand and verify that it is installed securely. Visually inspect that the tabs of the retainer are securely fitted into the quick release connector.
2. When the retainer is removed, observe the following procedure.

Note

- Use the designated genuine retainer only.

   (1) Install a new retainer onto the quick release connector. Visually inspect that the tabs of the retainer are securely fitted into the quick release connector.
   (2) Inspect that the inside of the fuel pipe and the quick release connector is free of foreign materials and damage. Clean as necessary, taking care not to damage the sealing surfaces.
   (3) Push the quick release connector into the fuel pipe until a click is heard.

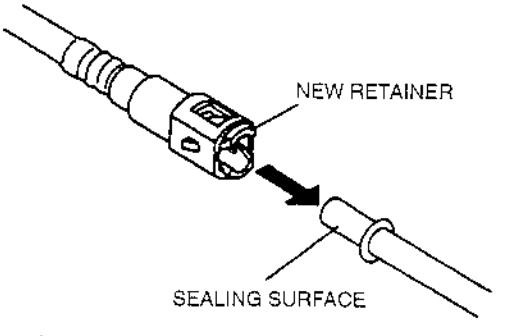

X5U114WCB

   (4) Pull the quick release connector by hand and verify that it is installed securely.

FUEL INJECTOR REMOVAL/INSTALLATION

X5U114W09

1. Complete the "BEFORE REPAIR PROCEDURE". (Refer to 01–14 BEFORE REPAIR PROCEDURE.)
2. Disconnect the negative battery cable.
3. Remove the dynamic chamber. (Refer to 01–13 INTAKE-AIR SYSTEM REMOVAL/INSTALLATION.)
4. Remove in the order indicated in the table.
5. Install in the reverse order of removal.
6. Complete the "AFTER REPAIR PROCEDURE". (Refer to 01–14 AFTER REPAIR PROCEDURE.)

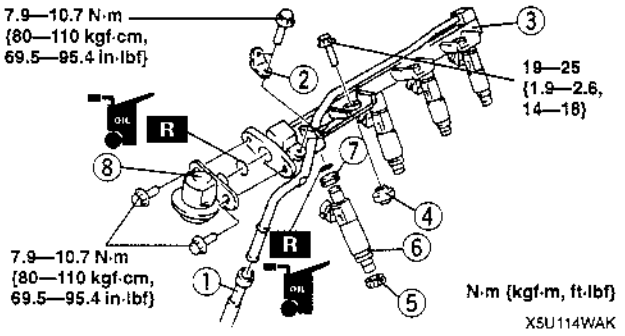

1	Plastic fuel hose ☞ 01–14 FUEL TANK REMOVAL/INSTALLATION, Plastic Fuel Hose Disassembly Note ☞ 01–14 FUEL TANK REMOVAL/INSTALLATION, Plastic Fuel Hose Assembly Note.
2	Fuel distributor bracket
3	Fuel distributor
4	Fuel distributor insulator
5	Fuel injector insulator
6	Fuel injector ☞ Installation Note
7	Grommet
8	Pulsation damper No.2

Fuel Injector Installation Note

1. Use new fuel injector O-rings.
2. Apply a small amount of engine oil to the O-rings and install them into the fuel distributor.
3. Verify that the O-rings and the fuel injector sealing surfaces are free of foreign materials. Clean with gasoline if necessary.
4. Install the fuel injectors in the fuel distributor with light twisting motion so that the O-rings will not be folded.

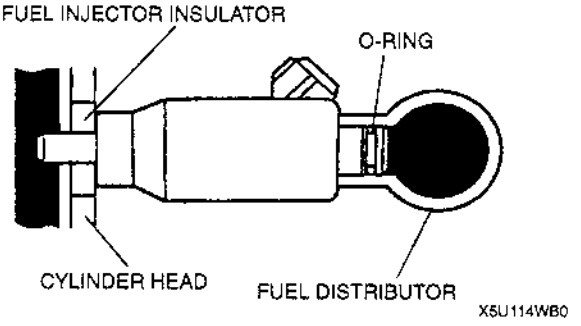

FUEL INJECTOR INSPECTION

X5U114W10

On-vehicle Inspection

1. Warm up the engine and let it idle.
2. Listen for operational sound of each fuel injector with a screwdriver or a soundscope.

Note
- The best way to judge the performance of a fuel injector is to compare its sound with the sound of other fuel injectors.

3. If no sound is heard, carry out the "Fuel Injector Resistance Inspection".

Resistance Inspection

Note
- Perform the following test only when directed.

1. Disconnect the fuel injector connectors.
2. Measure the resistance of the fuel injector by using an ohmmeter.

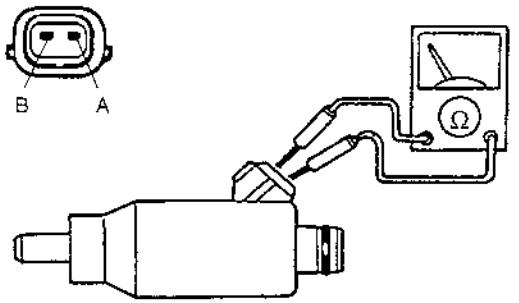

X5U114WC1

Resistance
12—16 Ω [20 °C {68 °F}]

3. If not as specified, replace the fuel injector. If as specified but On-vehicle Inspection is failed, inspect following:

Open circuit
- Ground circuit (No.1 cylinder fuel injector connector terminal B and PCM connector terminal 3W)
- Ground circuit (No.2 cylinder fuel injector connector terminal B and PCM connector terminal 3X)
- Ground circuit (No.3 cylinder fuel injector connector terminal B and PCM connector terminal 3Y)
- Ground circuit (No.4 cylinder fuel injector connector terminal B and PCM connector terminal 3Z)
- Power circuit (No.1 cylinder fuel injector connector terminal A and main relay connector terminal D through common connector)
- Power circuit (No.2 cylinder fuel injector connector terminal A and main relay connector terminal D through common connector)
- Power circuit (No.3 cylinder fuel injector connector terminal A and main relay connector terminal D through common connector)
- Power circuit (No.4 cylinder fuel injector connector terminal A and main relay connector terminal D through common connector)

MAIN RELAY

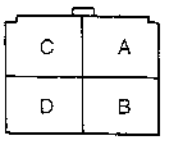

HARNESS SIDE CONNECTOR
(VIEW FROM TERMINAL SIDE)

X5U114WCD

Short circuit
- No.1 cylinder fuel injector connector terminal B and PCM connector terminal 3W to ground.
- No.2 cylinder fuel injector connector terminal B and PCM connector terminal 3X to ground.
- No.3 cylinder fuel injector connector terminal B and PCM connector terminal 3Y to ground.
- No.4 cylinder fuel injector connector terminal B and PCM connector terminal 3Z to ground.

Fuel Leakage Test

Warning
- **Fuel line spills and leaks are dangerous. Fuel can ignite and cause serious injuries or death and damage. Always carry out the following procedure with the engine stopped.**

1. Complete the "BEFORE REPAIR PROCEDURE". (Refer to 01–14 BEFORE REPAIR PROCEDURE.)
2. Disconnect the negative battery cable.
3. Remove the dynamic chamber. (Refer to 01–13 INTAKE-AIR SYSTEM REMOVAL/INSTALLATION.)
4. Remove the fuel injectors together with the fuel distributor. (Refer to 01–14 FUEL INJECTOR REMOVAL/INSTALLATION.)
5. Fasten the fuel injectors firmly to the fuel distributor with wire.

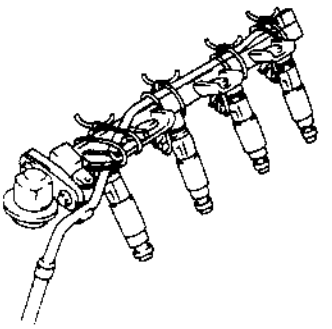

X5U114WAN

6. Connect the negative battery cable.

Caution
- **Connecting the wrong data link connector terminals may possibly cause a malfunction. Carefully connect the specified terminals only.**

7. Connect data link connector terminals F/P and GND by using a jumper wire.

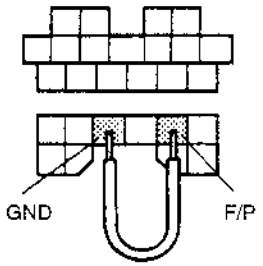

X5U114WAP

8. Turn the ignition switch to ON to operate the fuel pump.
9. Tilt the fuel injectors **approx. 60 degrees** and verify that fuel leaks from the fuel injector nozzles is within specification.

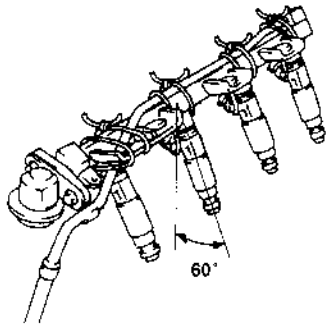

X5U114WAQ

Fuel leakage
Less than 1 drop/2 minutes

10. Turn the ignition switch off and remove the jumper wire.
11. If not as specified, replace the fuel injector.
12. Install the dynamic chamber. (Refer to 01–13 INTAKE-AIR SYSTEM REMOVAL/INSTALLATION.)
13. Complete the "AFTER REPAIR PROCEDURE". (Refer to 01–14 AFTER REPAIR PROCEDURE.)

Volume Test

Warning
- **Fuel line spills and leaks are dangerous. Fuel can ignite and cause serious injuries or death and damage. Always carry out the following procedure with the engine stopped.**

1. Complete the "BEFORE REPAIR PROCEDURE". (Refer to 01–14 BEFORE REPAIR PROCEDURE.)
2. Disconnect the negative battery cable.
3. Remove the dynamic chamber. (Refer to 01–13 INTAKE-AIR SYSTEM REMOVAL/INSTALLATION.)
4. Remove the fuel injectors together with the fuel distributor.
5. Fasten the fuel injectors firmly to the fuel distributor with wire and connect the fuel pipe connector.
6. Connect the **SST** as shown in the figure.

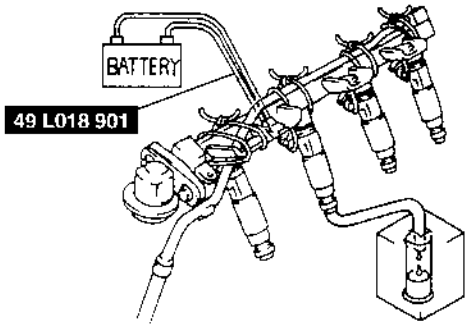

X5U114WAR

7. Connect the negative battery cable.

Caution
- **Connecting the wrong data link connector terminals may possibly cause a malfunction. Carefully connect the specified terminals only.**

8. Connect data link connector terminals F/P and GND by using a jumper wire.

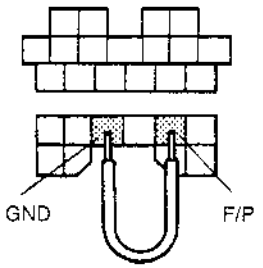

X5U114WAS

9. Turn the ignition switch to ON to operate the fuel pump.
10. Measure the injection volume of each fuel injector by using a graduated container.

Injection volume
66—82 ml {66—82 cc, 2.3—2.7 floz}/15 sec.

11. Turn the ignition switch off and disconnect the jumper wire.
12. If not as specified, replace the fuel injector.
13. Install the dynamic chamber. (Refer to 01–13 INTAKE-AIR SYSTEM REMOVAL/INSTALLATION.)
14. Complete the "AFTER REPAIR PROCEDURE". (Refer to 01–14 AFTER REPAIR PROCEDURE.)

PRESSURE REGULATOR REMOVAL/INSTALLATION

X5U114W11

(Refer to 01–14 FUEL PUMP DISASSEMBLY/ASSEMBLY.)

PRESSURE REGULATOR INSPECTION

X5U114W12

Fuel Line Pressure Inspection

Warning
- **Fuel line spills and leaks are dangerous. Fuel can ignite and cause serious injuries or death and damage. Always carry out the following procedure with the engine stopped.**

1. Complete the "BEFORE REPAIR PROCEDURE". (Refer to 01–14 BEFORE REPAIR PROCEDURE.)
2. Disconnect the negative battery cable.
3. Disconnect the fuel pipe on the pulsation damper No.1 outlet side. Set the **SST** between pulsation damper No.1 and the fuel distributor as shown in the figure. Turn the lever on the **SST** as shown to open the fuel line. (Refer to 01–14 FUEL INJECTOR REMOVAL/INSTALLATION, Fuel Pipe Removal Note.)

Note
- Verify that a click is heard when the **SST** is pushed into pulsation damper No.1 and fuel pipe.

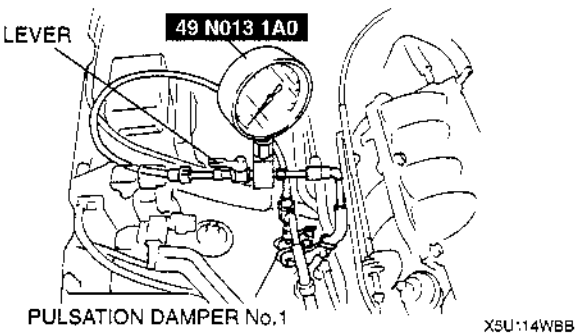

X5U114WBB

4. Pull the quick release connector by hand and verify that it is installed securely.
5. Connect the negative battery cable.

Caution
- **Connecting the wrong data link connector terminals may possibly cause a malfunction. Carefully connect the specified terminals only.**

6. Connect data link connector terminals F/P and GND by using a jumper wire.

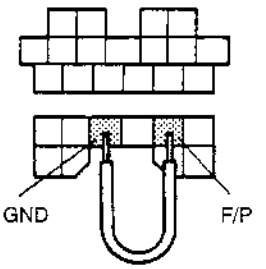

X5U114WBC

7. Turn the ignition switch to ON to operate the fuel pump. Measure the fuel line pressure.

Fuel line pressure
370—420 kPa {3.7—4.3 kgf/cm^2, 53—61 psi}

8. Turn the ignition switch off and disconnect the jumper wire.
9. If not as specified, inspect following:
   - Fuel pump maximum pressure
   - Fuel pump relay
   - Fuel filter for clogging
   - Fuel line for clogging or leakage

   If all items above are okay, perform the "Fuel Hold Pressure Inspection".
10. Disconnect the **SST** and connect the fuel pipe to the pulsation damper No.1. (Refer to 01–14 FUEL INJECTOR REMOVAL/INSTALLATION, Fuel Pipe Installation Note.)
11. Complete the "AFTER REPAIR PROCEDURE". (Refer to 01–14 AFTER REPAIR PROCEDURE.)

Fuel Hold Pressure Inspection

Warning

- **Fuel line spills and leaks are dangerous. Fuel can ignite and cause serious injuries or death and damage. Always carry out the following procedure with the engine stopped.**

1. Complete the "BEFORE REPAIR PROCEDURE". (Refer to 01–14 BEFORE REPAIR PROCEDURE.)
2. Disconnect the negative battery cable.
3. Disconnect the fuel pipe on the pulsation damper No.1 outlet side. Set the **SST** between pulsation damper No.1 and the fuel distributor as shown in the figure. Turn the lever on the **SST** as shown to open the fuel line. (Refer to 01–14 FUEL INJECTOR REMOVAL/INSTALLATION, Fuel Pipe Removal Note.)

Note

- Verify that a click is heard when the **SST** is pushed into pulsation damper No.1.

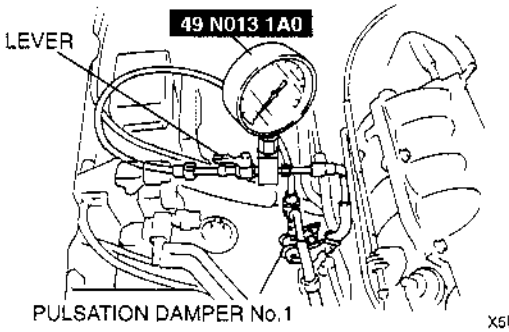

X5U114WBD

4. Pull the quick release connector by hand and verify that it is installed securely.
5. Connect the negative battery cable.

Caution

- **Connecting the wrong data link connector terminals may possibly cause a malfunction. Carefully connect the specified terminals only.**

6. Connect data link connector terminals F/P and GND by using a jumper wire.

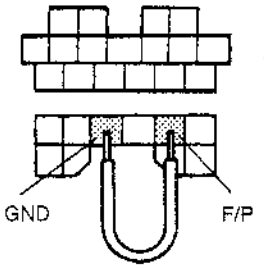

X5U114WBE

7. Turn the ignition switch to ON for **10 seconds** to operate the fuel pump.
8. Turn the ignition switch off. Measure the fuel hold pressure **after 5 minutes**.

Fuel hold pressure
More than 250 kPa {2.55 kgf/cm^2, 36.3 psi}

9. Disconnect the jumper wire.
10. Disconnect the **SST** and connect the fuel pipe to the pulsation damper No.1. (Refer to 01–14 FUEL INJECTOR REMOVAL/INSTALLATION, Fuel Pipe Installation Note.)
11. If not as specified, inspect following:
    - Fuel pump hold pressure
    - Fuel injector for leakage
    - Fuel line for improper routing, kinks or leakage

    If okay, replace the pressure regulator. (Refer to 01–14 FUEL PUMP DISASSEMBLY/ASSEMBLY.)

PULSATION DAMPER No.1 REMOVAL/INSTALLATION

X5U114W13

1. Complete the "BEFORE REPAIR PROCEDURE". (Refer to 01–14 BEFORE REPAIR PROCEDURE.)
2. Disconnect the negative battery cable.
3. Remove in the order indicated in the table.
4. Install in the reverse order of removal.
5. Complete the "AFTER REPAIR PROCEDURE". (Refer to 01–14 AFTER REPAIR PROCEDURE.)

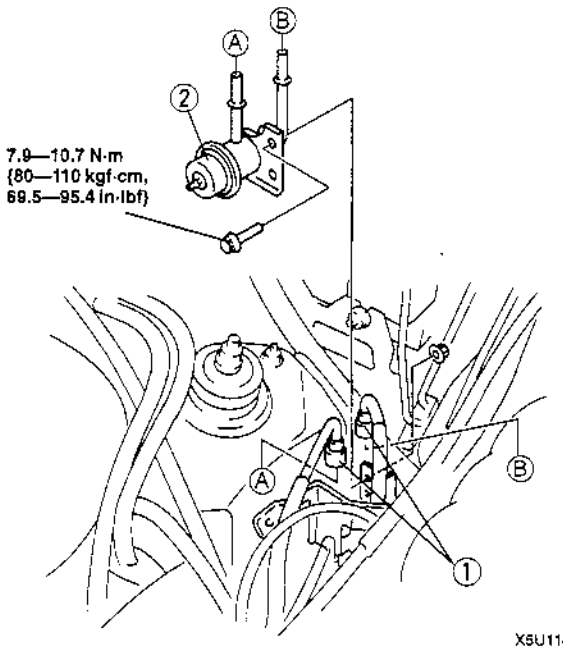

X5U114WAT

1	Plastic fuel hose ☞ 01–14 FUEL TANK REMOVAL/INSTALLATION, Plastic Fuel Hose Disassembly Note ☞ 01–14 FUEL TANK REMOVAL/INSTALLATION, Plastic Fuel Hose Assembly Note
2	Pulsation damper No.1

PULSATION DAMPER No.2 REMOVAL/INSTALLATION

X5U114W14

(Refer to 01–14 FUEL INJECTOR REMOVAL/INSTALLATION.)

PULSATION DAMPER No.1, No.2 INSPECTION

X5U114W15

1. Visually inspect pulsation damper No.1 and No.2 for damage and cracks. Also inspect that there is no extreme rust which will cause fuel leakage.
2. If either is observed, replace the faulty pulsation damper.

FUEL PUMP RELAY INSPECTION

X5U114W16

Note
- The lock of the fuel pump relay will be easily broken when removing the relay from the bracket. Do not remove the relay from the bracket except when replacement is required. Perform "FUEL PUMP RELAY INSPECTION" before removing the relay.

Simulation Test
1. Carry out the "Fuel Pump Operation Inspection", "Fuel Pump Control Inspection". (Refer to 01–01A ENGINE SYSTEM INSPECTION, Fuel Pump Operation Inspection.) (Refer to 01–01A ENGINE SYSTEM INSPECTION, Fuel Pump Control Inspection.)
2. If not as specified, perform the further inspection for the fuel pump relay.

Continuity Inspection

Note
- Perform the following test only when directed.

1. Disconnect the negative battery cable.
2. Disconnect the fuel pump relay connector (6-pin type connector: 4 terminal) located above the accelerator pedal.

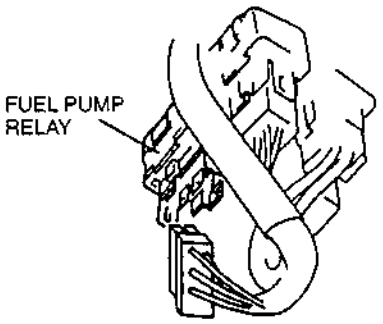

X5U114WAU

3. Inspect for continuity between the fuel pump relay terminals by using an ohmmeter.

○—○ : Continuity

Step	Terminal			
	A	B	C	E
1	○—○			
2	B+	GND	○—○	

X5U114WAV

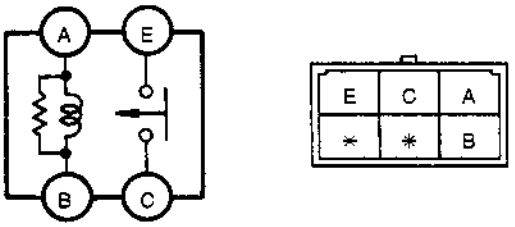

X5U114WAW

4. If not as specified, replace the fuel pump relay. If as specified but the Simulation Test is failed, inspect following:
Fuel pump malfunction
Open circuit
- Ground circuit (Fuel pump relay connector terminal B and PCM connector terminal 3N)
- Ground circuit (Fuel pump relay connector terminal C and fuel pump connector terminal B through common connector)
- Power circuit (Fuel pump relay connector terminal A or E and main relay connector terminal D)

FUEL PUMP

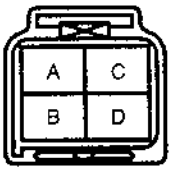

HARNESS SIDE CONNECTOR
(VIEW FROM TERMINAL SIDE)

X5U114WCE

MAIN RELAY

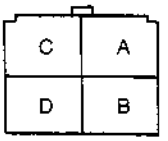

HARNESS SIDE CONNECTOR
(VIEW FROM TERMINAL SIDE)

X5U114WCF

Short circuit
- Fuel pump relay connector terminal B and PCM connector terminal 3N to ground
- Fuel pump relay connector terminal C and fuel pump connector terminal B to ground

5. Connect the fuel pump relay connector.
6. Connect the negative battery cable.

VENT CUT VALVE INSPECTION

X5U114W17

Caution

- **It is necessary to install the fuel-filler cap properly. When the fuel-filler cap, except for the OES, has been installed or the fuel-filler cap is loose, the vent cut valve may not operate properly.**

1. Verify that air goes through from (a) to (b) with the fuel-filler cap on.

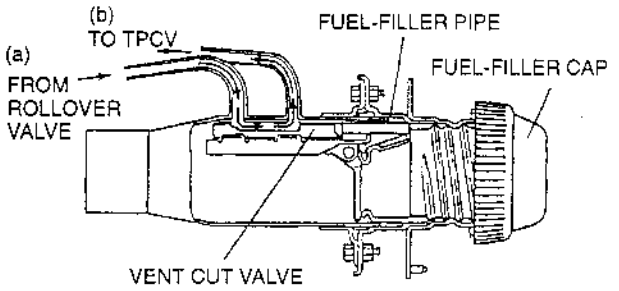

X5U114WAX

2. If air does not go through, replace the fuel-filler pipe component.
3. Remove the fuel-filler cap.
4. While depressing the lever in the fuel-filler port, verify that air does not go through from (a) to (b).

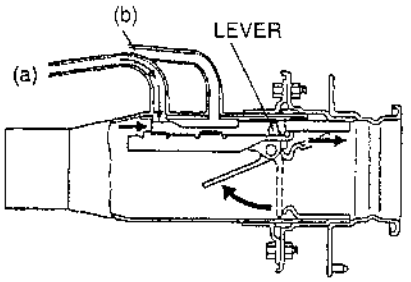

X5U114WAY

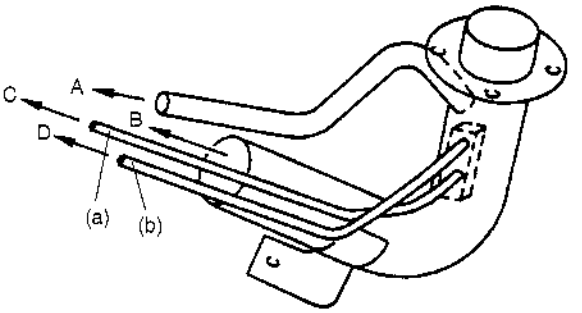

A: TO FUEL TANK (BREATHER HOSE)
B: TO FUEL TANK (JOINT HOSE)
C: TO ROLLOVER VALVE AND FUEL TANK PRESSURE SENSOR
D: TO TANK PRESSURE CONTRL VALVE (TPCV)

X5U114WAZ

5. If air goes through them, replace the fuel-filler pipe component.

01–15 EXHAUST SYSTEM

EXHAUST SYSTEM INSPECTION

X5U115W01

1. Start the engine and inspect each exhaust system component for exhaust gas leakage.
2. If leakage is found, repair or replace as necessary.

EXHAUST SYSTEM REMOVAL/INSTALLATION

X5U115W03

Warning

- **When the engine and exhaust system are hot, they can badly burn. Turn off the engine and wait until they are cool before removing or installing the exhaust system.**

1. Disconnect the negative battery cable.
2. Remove in the order indicated in the table.
3. Install in the reverse order of removal.

EXCEPT CALIFORNIA EMISSION REGULATIONS APPLICABLE MODEL

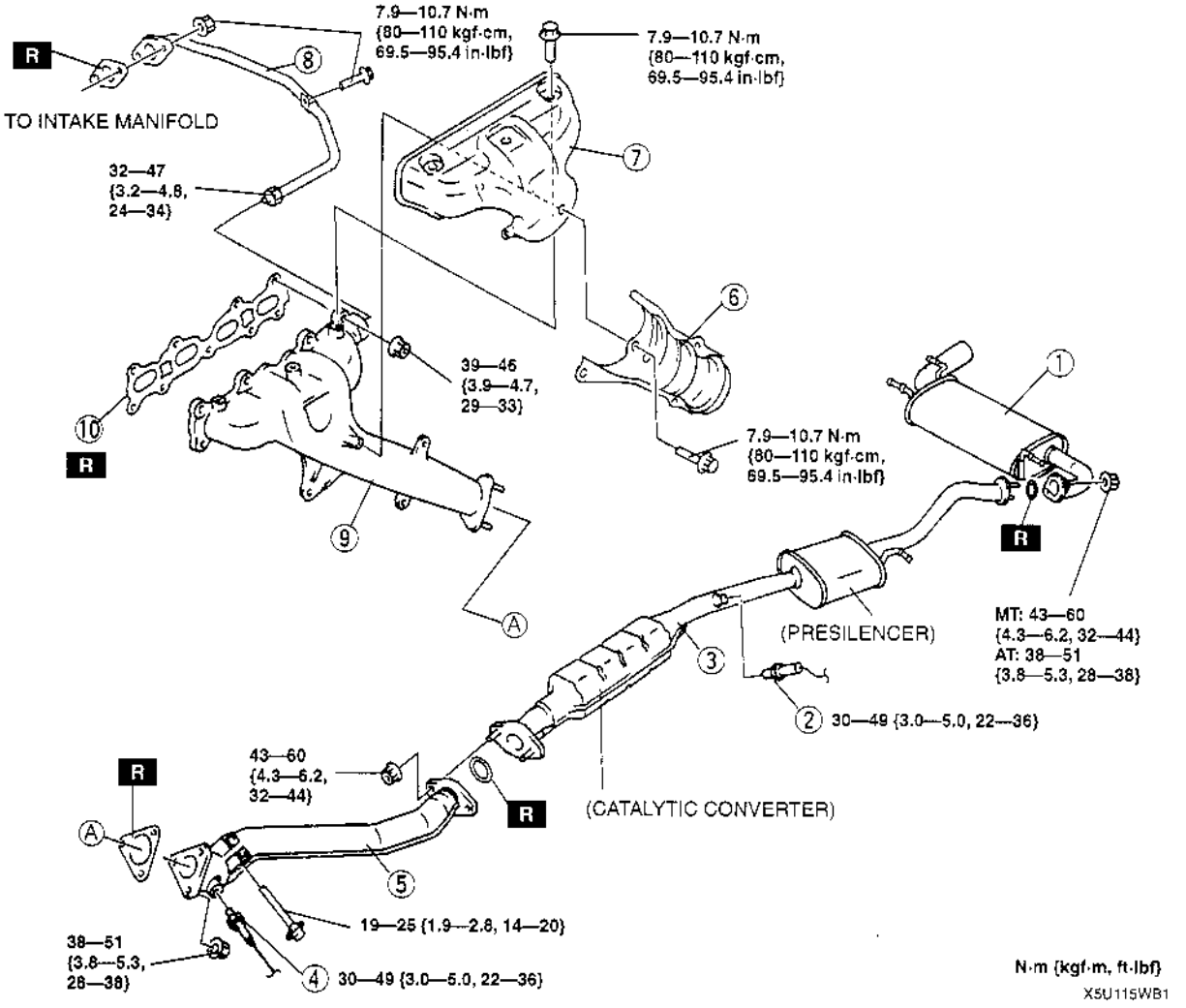

1	Main silencer
2	Heated oxygen sensor (Rear)
3	Middle pipe
4	Heated oxygen sensor (Front)
5	Front pipe
6	Exhaust manifold insulator No1 ☞ Removal Note

7	Exhaust manifold insulator No2
8	EGR pipe
9	Exhaust manifold
10	Exhaust manifold gasket ☞ Installation Note

CALIFORNIA EMISSION REGULATIONS APPLICABLE MODEL

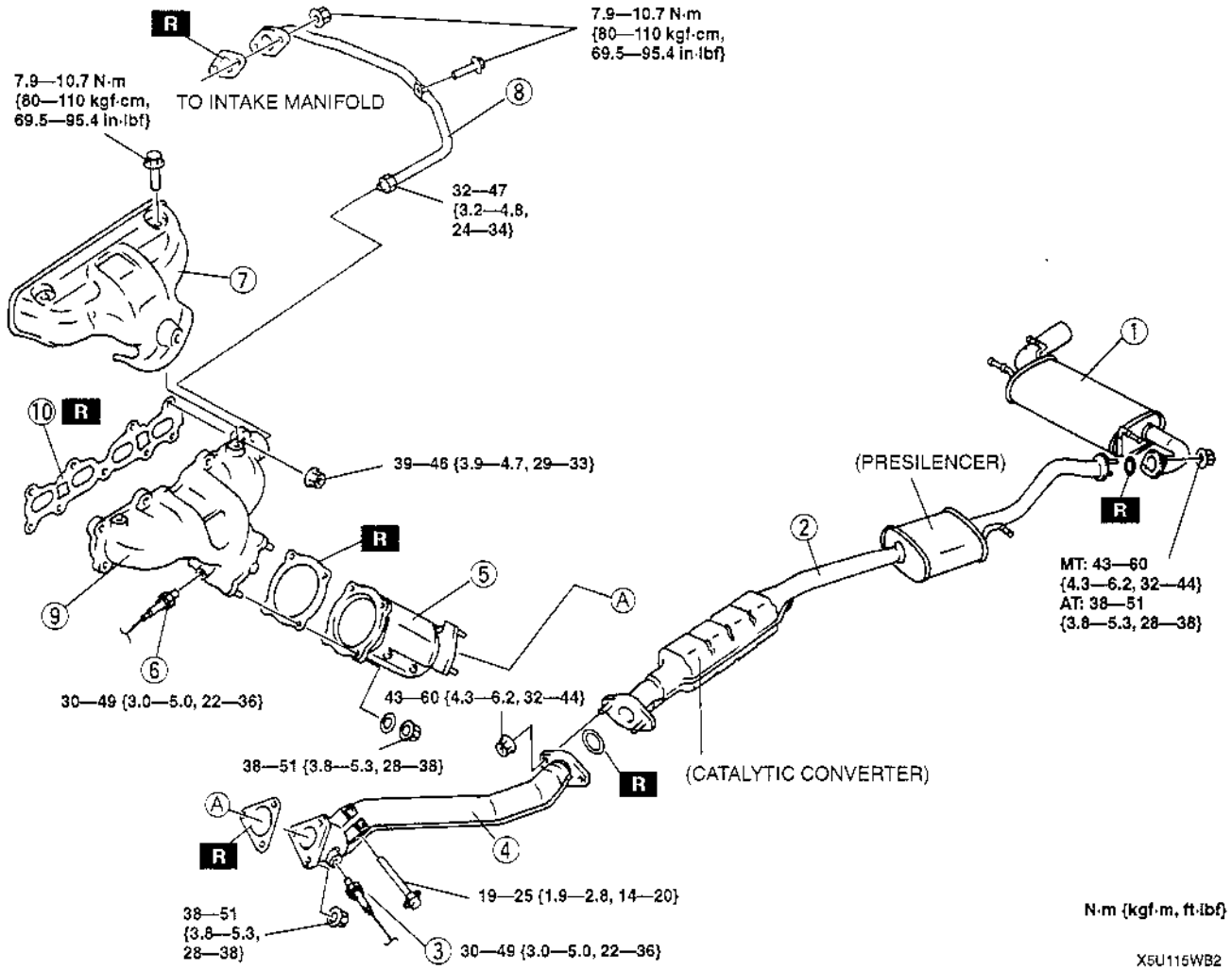

1	Main silencer
2	Middle pipe
3	Heated oxygen sensor (Rear)
4	Front pipe
5	Warm up three way catalytic converter
6	Heated oxygen sensor (Front)

7	Exhaust manifold insulator ☞ Removal Note
8	EGR pipe
9	Exhaust manifold
10	Exhaust manifold gasket ☞ Installation Note

Exhaust Manifold Insulator No1, Exhaust Manifold Insulator Removal Note

- Remove the windshield washer tank with the washer tank connector connected before removing the exhaust manifold insulator. (Refer to 09–19 WINDSHIELD WASHER TANK REMOVAL/INSTALLATION.)

Exhaust Manifold Gasket Installation Note

- To install the exhaust manifold gasket, make sure that the convex side of the gasket is faced to the exhaust manifold side.

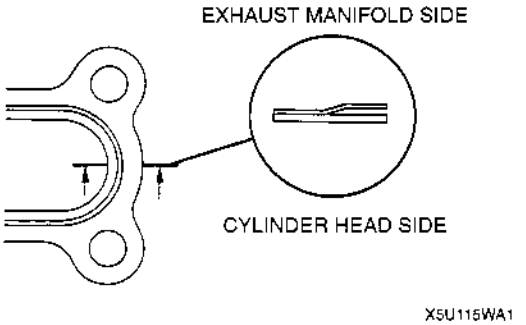

01–16 EMISSION SYSTEM

EVAPORATIVE EMISSION CONTROL SYSTEM COMPONENTS LOCATION

X5U116W01

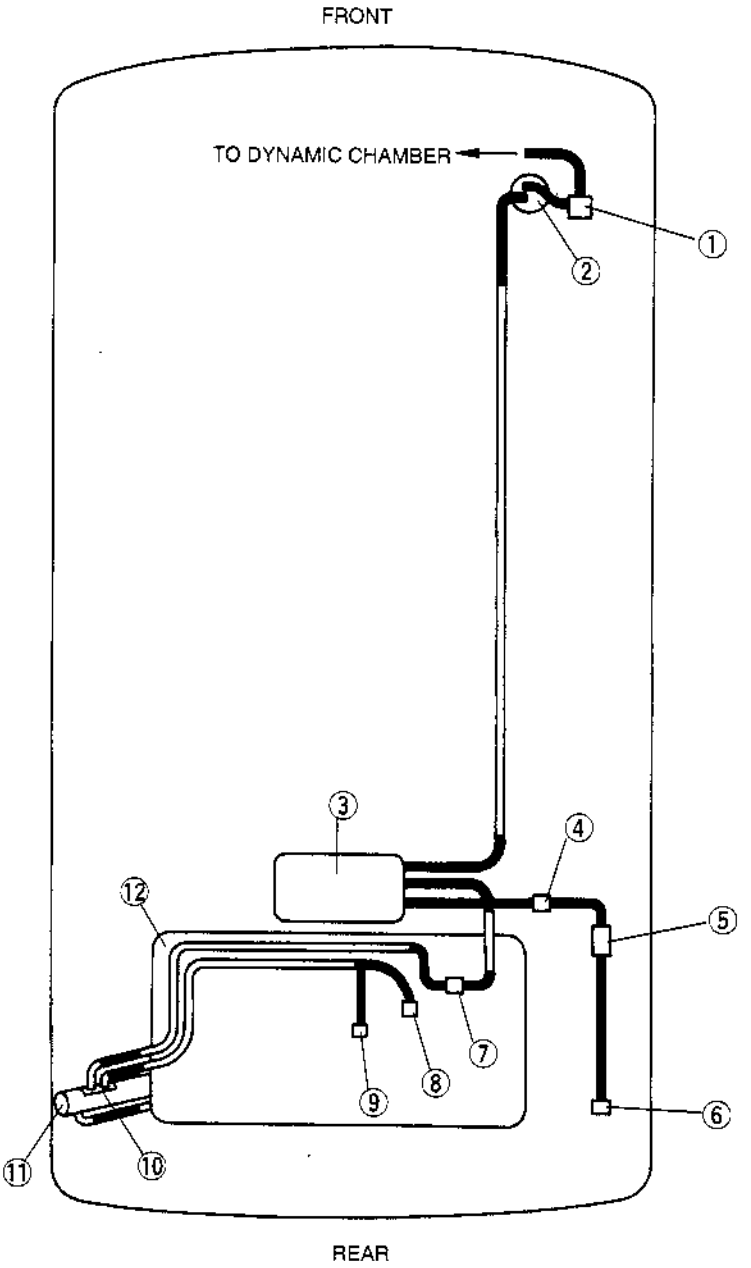

X5U116WA0

1	Purge solenoid valve
2	Catch tank
3	Charcoal canister
4	CDCV
5	Air filter
6	Evaporative chamber

7	TPCV
8	Fuel tank pressure sensor
9	Rollover valve
10	Vent cut valve
11	Fuel-filler cap
12	Fuel tank

Figure 1

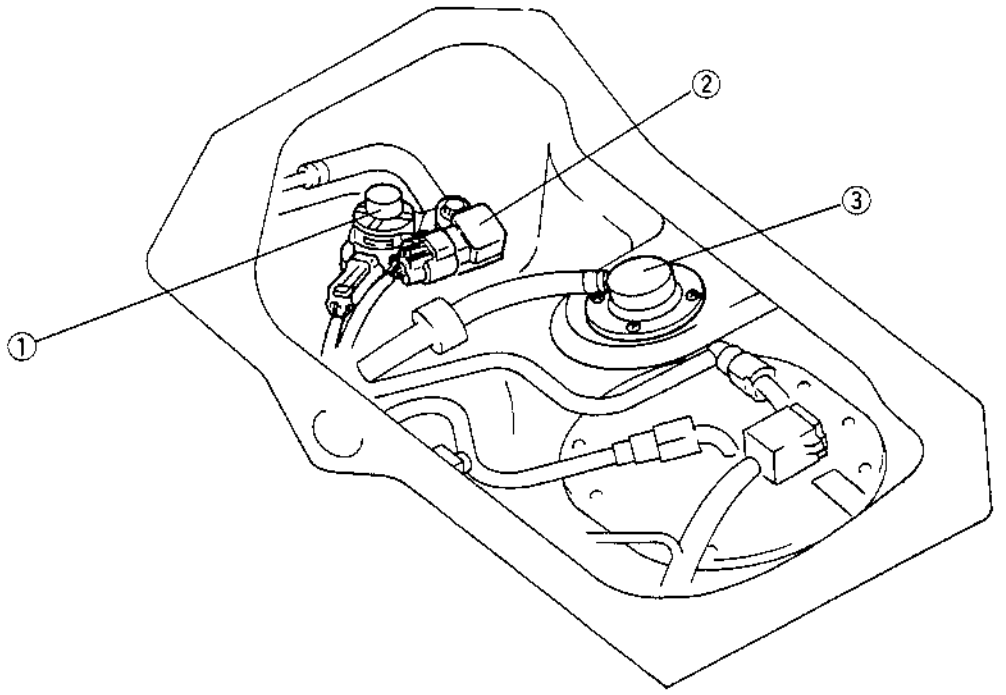

1	TPCV
2	Fuel tank pressure sensor
3	Rollover valve

Figure 2

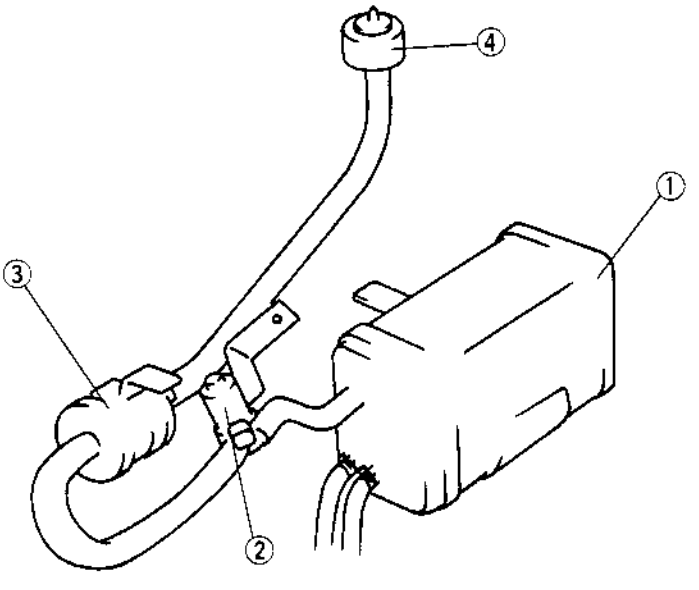

1	Charcoal canister
2	CDCV
3	Air filter
4	Evaporative chamber

Figure 3

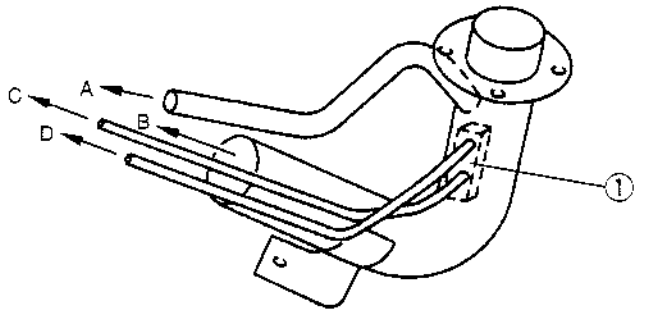

A: TO FUEL TANK (BREATHER HOSE)
B: TO FUEL TANK (JOINT HOSE)
C: TO ROLLOVER VALVE AND FUEL TANK PRESSURE SENSOR
D: TO TPCV

X5U116WA3

1	Vent cut valve

EMISSION SYSTEM (ENGINE COMPARTMENT SIDE) COMPONENT LOCATION

X5U116W02

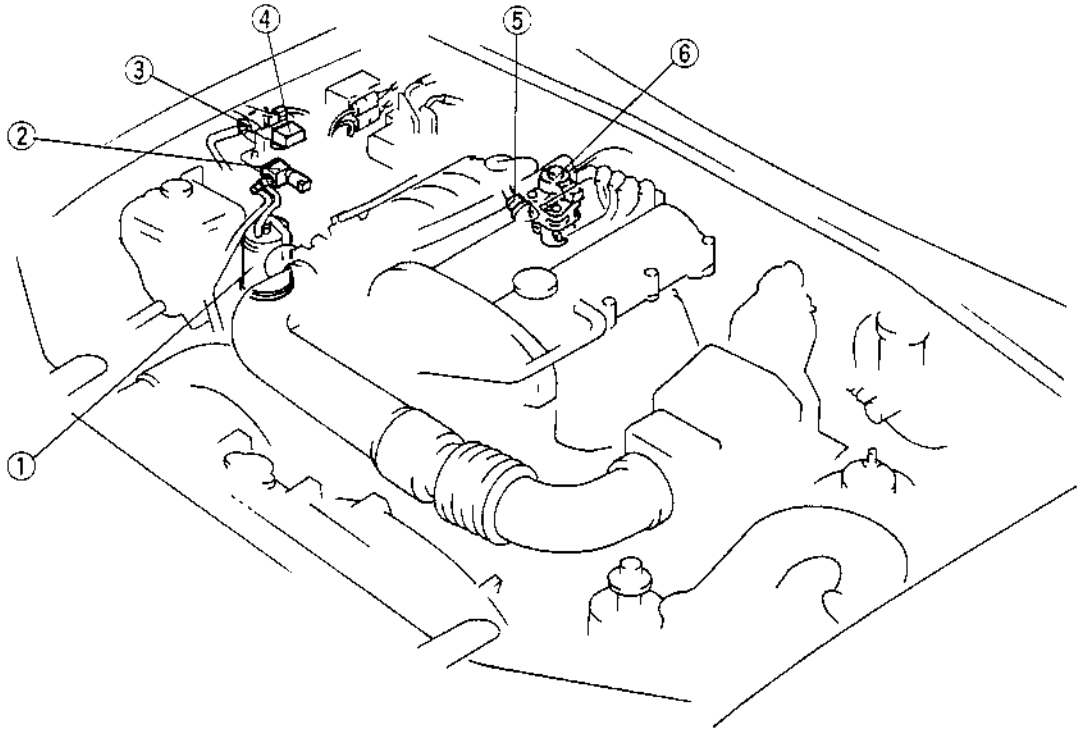

X5U116WA4

1	Catch tank
2	Purge solenoid valve
3	EGR boost sensor solenoid valve

4	EGR boost sensor
5	PCV valve
6	EGR valve

ROLLOVER VALVE REMOVAL/INSTALLATION

X5U116W15

1. Complete the "BEFORE REPAIR PROCEDURE". (Refer to 01–14 BEFORE REPAIR PROCEDURE.)
2. Disconnect the negative battery cable.
3. Uncover the rear package trim.
4. Remove the service hole cover.
5. Remove in the order indicated in the table.
6. Install in the reverse order of removal.

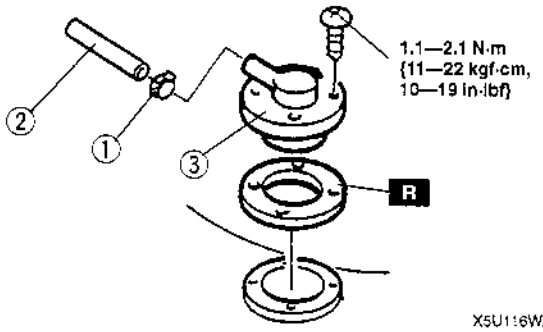

X5U116WAJ

1	Clamp
2	Evaporative hose ☞ Installation Note
3	Rollover valve

Evaporative Hose Installation Note

- Install the evaporative hose until it contacts the stopper.

ROLLOVER VALVE INSPECTION

X5U116W03

1. Remove the rollover valve. (Refer to 01–16 ROLLOVER VALVE REMOVAL/INSTALLATION.)
2. Blow from port A and verify that there is airflow.

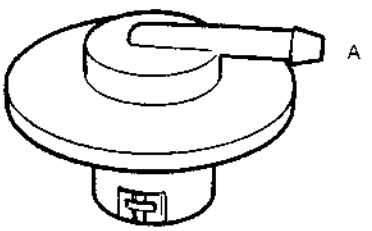

X5U116WA5

3. Turn the valve over and blow from port A. Verify that there is no airflow.

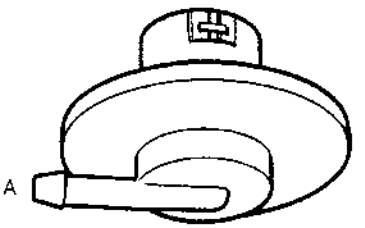

X5U116WA6

4. If not as specified, replace the rollover valve.

AIR FILTER INSPECTION

X5U116W05

1. Remove the air filter.
2. Blow from port A and verify that there is airflow from port B.
3. Blow from port B and verify that there is airflow from port A.

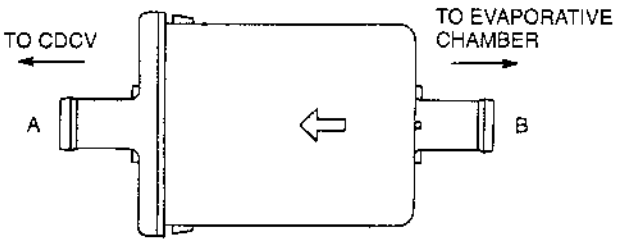

X5U116WA9

4. If not as specified, replace the air filter.

TANK PRESSURE CONTROL VALVE (TPCV) INSPECTION

X5U116W04

Simulation Test

1. Carry out the "Evaporative Emission Control System Inspection". (Refer to 01–01A ENGINE SYSTEM INSPECTION, Evaporative Emission Control System Inspection.)
2. If not as specified, perform the further inspection for the TPCV.

Airflow Inspection

Note

- Perform the following test only when directed.

1. Disconnect the negative battery cable.
2. Remove the TPCV.
3. Apply pressure to port A and inspect airflow under the following conditions.

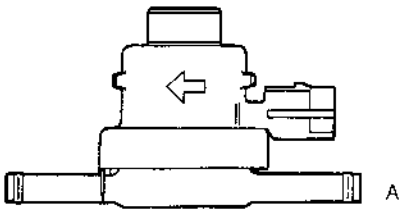

X5U116WAN

Pressure kPa {mmHg, inHg}	Airflow
Between 0— +0.20 {0— +1.47, 0— +0.06}	No
Above +0.98 {+7.36, +0.29}	Yes
Below –0.98 {–7.36, –0.29}	Yes

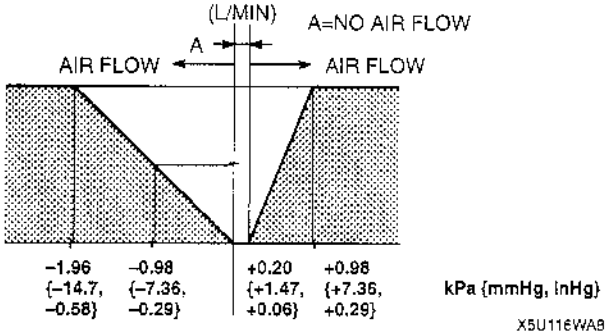

X5U116WA8

4. Apply battery positive voltage to the valve connector terminal A and apply pressure to port A, and verify that air flows smoothly.

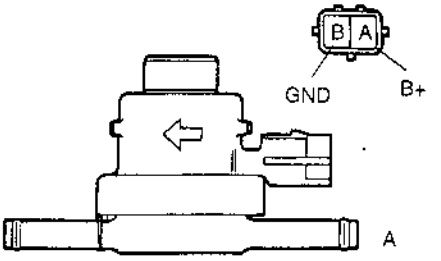

X5U116WA7

5. If not as specified, replace the TPCV. If as specified but the Simulation Test is failed, inspect following:
   Evaporative hose improper routing, kinks or leakage.
   Open circuit
   - Ground circuit (TPCV connector terminal B and PCM connector terminal 3U through common connector)
   - Power circuit (TPCV connector terminal A and main relay connector terminal D through common connector)

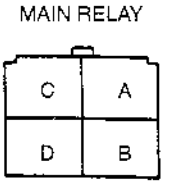

X5U116WB0

Short circuit

- TPCV connector terminal B and PCM connector terminal 3U to ground

6. Connect the negative battery cable.

CHARCOAL CANISTER INSPECTION

X5U116W07

1. Remove the charcoal canister. (Refer to 01–14 FUEL TANK REMOVAL/INSTALLATION.)
2. Plug ports A and B, then blow air into port C.
3. Verify that there is no air leakage.
4. If not as specified, replace the charcoal canister.

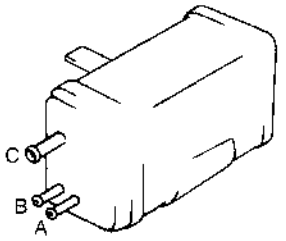

X5U116WAB

CANISTER DRAIN CUT VALVE (CDCV) REMOVAL/INSTALLATION

X5U116W16

1. Disconnect the negative battery cable.
2. Raise the rear of the vehicle and support it with safety stands.
3. Remove in the order indicated in the table.
4. Install in the reverse order of removal.

1	Evaporative hose ☞ Installation Note
2	CDCV

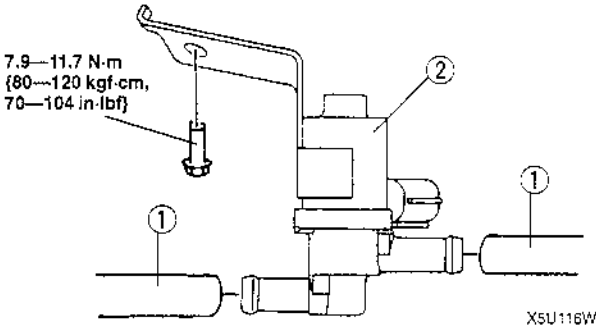

X5U116WAL

Evaporative Hose Installation Note

- Install the evaporative hose until it contacts the stopper.

CANISTER DRAIN CUT VALVE (CDCV) INSPECTION

X5U116W08

Simulation Test

1. Carry out the "Evaporative Emission Control System Inspection". (Refer to 01–01A ENGINE SYSTEM INSPECTION, Evaporative Emission Control System Inspection.)
2. If not as specified, perform the further inspection for the CDCV.

○—○ : Continuity ○═══○ : Airflow

Step	Terminal		Port	
	A	B	A	B
1	○	○	○	○
2	B+	GND		

W6U116WAA

Airflow Inspection

Note

- Perform the following test only when directed.

1. Remove the CDCV. (Refer to 01–16 CANISTER DRAIN CUT VALVE (CDCV) REMOVAL/INSTALLATION.)
2. Inspect airflow between the ports under the following conditions.

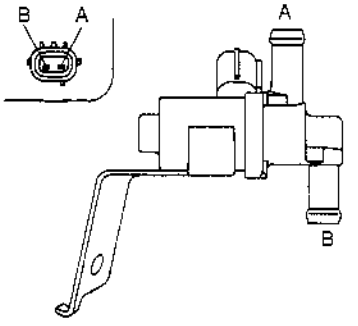

X5U116WAC

3. If not as specified, replace the CDCV. If as specified but the Simulation Test is failed, inspect following:
   Evaporative hose improper routing, kinks or leakage.
   Open circuit
   - Ground circuit (CDCV connector terminal B and PCM connector terminal 3U through common connector)
   - Power circuit (CDCV connector terminal A and main relay connector terminal D)

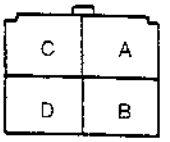

X5U116WB

Short circuit
- CDCV connector terminal B and PCM connector terminal 3U to ground

CATCH TANK INSPECTION

X5U116W09

1. Remove the catch tank.
2. Plug the purge solenoid valve side port of the catch tank.
3. Blow from the charcoal canister side port and verify that there is no air leakage.

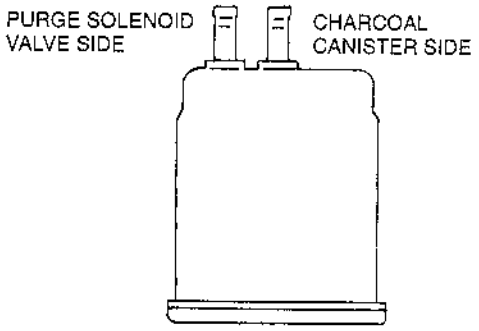

X5U116WAD

4. If not as specified, replace the catch tank.

PURGE SOLENOID VALVE REMOVAL/INSTALLATION

X5U116W17

1. Disconnect the negative battery cable.
2. Remove in the order indicated in the table.
3. Install in the reverse order of removal.

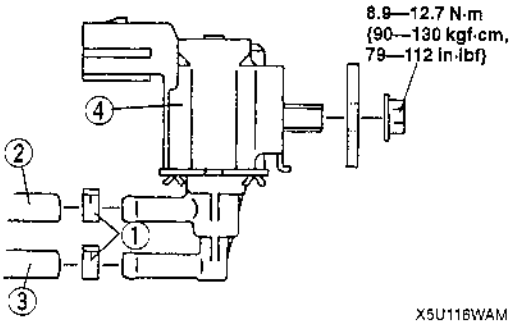

X5U116WAM

1	Clamp
2	Evaporative hose ☞ Installation Note
3	Vacuum hose ☞ Installation Note
4	Purge solenoid valve

Vacuum Hose, Evaporative Hose Installation Note
- Install the vacuum hose and evaporative hose until it contacts the stopper.

PURGE SOLENOID VALVE INSPECTION

X5U116W10

Simulation Test

1. Carry out the "Purge Control Inspection". (Refer to 01-01A ENGINE SYSTEM INSPECTION, Purge Control Inspection.)
2. If not as specified, perform the further inspection for the purge solenoid valve.

Airflow Inspection

Note
- Perform the following test only when directed.

1. Remove the purge solenoid valve. (Refer to 01–16 PURGE SOLENOID VALVE REMOVAL/INSTALLATION.)
2. Inspect airflow between the ports under the following conditions.

○—○ : Continuity ○═══○ : Airflow

Step	Terminal		Port	
	A	B	A	B
1	○	○		
2	B+	GND	○	○

X5U116WAK

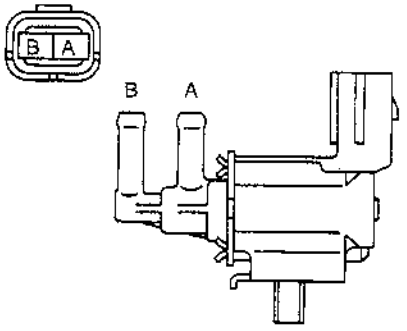

X5U116WAE

3. If not as specified, replace the purge solenoid valve. If as specified but the Simulation Test is failed, inspect following:
Vacuum hose improper routing, kinks or leakage.
Open circuit
- Ground circuit (purge solenoid valve connector terminal B and PCM connector terminal 3L through common connector)
- Power circuit (purge solenoid valve connector terminal A and main relay connector terminal D through common connector)

MAIN RELAY

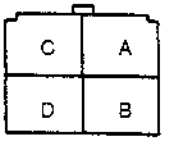

HARNESS SIDE CONNECTOR
(VIEW FROM TERMINAL SIDE)

X5U116WB2

Short circuit
- Purge solenoid valve connector terminal B and PCM connector terminal 3L to ground

EVAPORATIVE CHAMBER INSPECTION

X5U116W06

1. Remove the evaporative chamber.
2. Blow from port A and verify that there is airflow from port B.

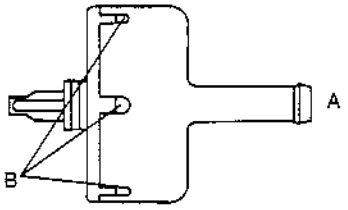

X5U116WAA

3. If not as specified, replace the evaporative chamber.

EGR VALVE REMOVAL/INSTALLATION

X5U116W11

1. Disconnect the negative battery cable.
2. Remove in the order indicated in the table.
3. Install in the reverse order of removal.
4. Connect the negative battery cable.

1	EGR valve connector
2	EGR valve

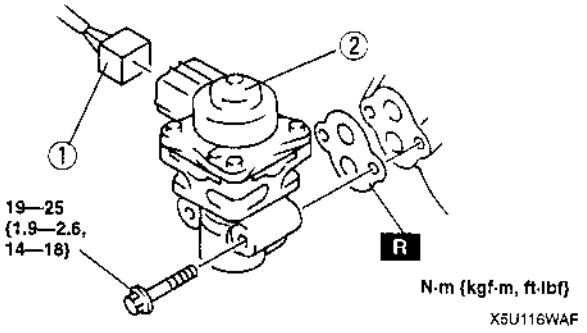

EGR VALVE INSPECTION

X5U116W12

On-vehicle Inspection

1. Carry out the "EGR Control Inspection". (Refer to 01–01A ENGINE SYSTEM INSPECTION, EGR Control Inspection.)
2. If not as specified, perform the further inspection for the EGR valve.

Resistance Inspection

Note

- Perform the following test only when directed.

1. Disconnect the negative battery cable.
2. Inspect resistance of the EGR valve coils.

Terminals	Resistance (Ω)
C—E C—A D—B D—F	Approx. 22

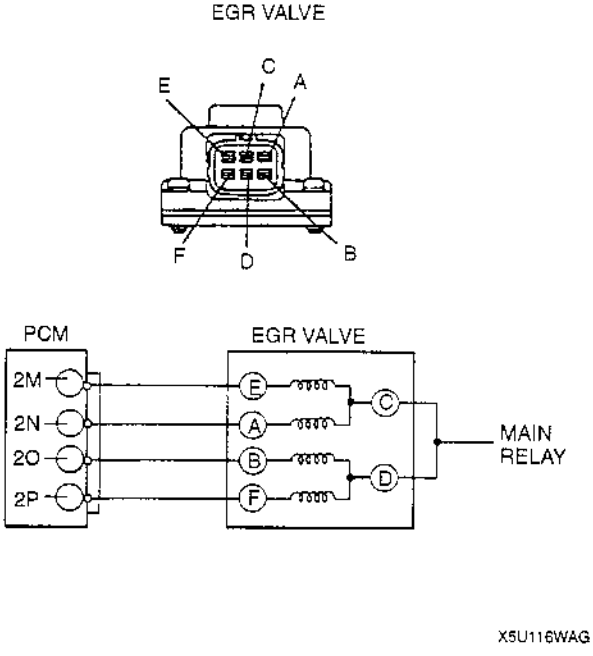

3. If not as specified, replace the EGR valve. If as specified but the Simulation Test is failed, inspect following:
   Vacuum hose improper routing, kinks or leakage.
   Open circuit
   - Ground circuit (EGR valve connector terminal E and PCM connector terminal 2M)
   - Ground circuit (EGR valve connector terminal A and PCM connector terminal 2N)
   - Ground circuit (EGR valve connector terminal B and PCM connector terminal 2O)
   - Ground circuit (EGR valve connector terminal F and PCM connector terminal 2P)
   - Power circuit (EGR valve connector terminal C or D and main relay connector terminal D through common connector)

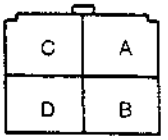

HARNESS SIDE CONNECTOR
(VIEW FROM TERMINAL SIDE)

X5U116WB3

Short circuit

- EGR valve connector terminal E and PCM connector terminal 2M to ground
- EGR valve connector terminal A and PCM connector terminal 2N to ground
- EGR valve connector terminal B and PCM connector terminal 2O to ground
- EGR valve connector terminal F and PCM connector terminal 2P to ground

4. Remove the EGR valve, and inspect for any damage or clogging. Replace the EGR valve if not as specified.
5. Connect the negative battery cable.

EGR BOOST SENSOR SOLENOID VALVE INSPECTION

X5U116W13

Simulation Test

1. Carry out the "EGR Control Inspection". (Refer to 01-01A ENGINE SYSTEM INSPECTION, EGR Control Inspection.)
2. If not as specified, perform the further inspection for the EGR boost sensor solenoid valve.

Airflow Inspection

Note

- Perform the following test only when directed.

1. Disconnect the negative battery cable.
2. Remove the EGR boost sensor solenoid valve.
3. Inspect airflow between each port under the following conditions.

○—○ : Continuity ○═══○ : Airflow

Step	Terminal		Port		
	A	B	A	B	C
1	○—○			○═══○	
2	B+	GND	○═══○		

W6U116WAK

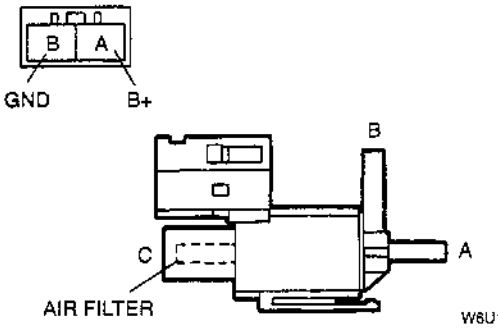

W6U116WAJ

4. If not as specified, replace the EGR boost sensor solenoid valve. If as specified but the Simulation Test is failed, inspect following:
   Vacuum hose improper routing, kinks or leakage.
   Open circuit
   - Ground circuit (EGR boost sensor solenoid valve connector terminal B and PCM connector terminal 3T)
   - Power circuit (EGR boost sensor solenoid valve connector terminal A and main relay connector terminal D through common connector)

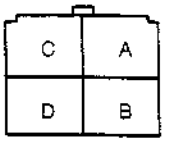

HARNESS SIDE CONNECTOR
(VIEW FROM TERMINAL SIDE)

X5U116WB4

Short circuit

- EGR boost sensor solenoid valve connector terminal B and PCM connector terminal 3T to ground

5. Connect the negative battery cable.

PCV VALVE INSPECTION

1. Remove the PCV valve.
2. Blow through the valve and verify that air flows as specified.

Specification

Condition	Airflow
Air applied from port A	Yes
Air applied from port B	No

X5U116W14

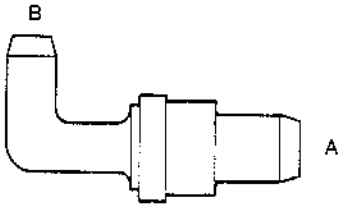

X5U116WAH

3. If not as specified, replace the PCV valve.

01–17 CHARGING SYSTEM

BATTERY REMOVAL/INSTALLATION

X5U117W01

1. Remove in the order indicated in the table.
2. Install in the reverse order of removal.

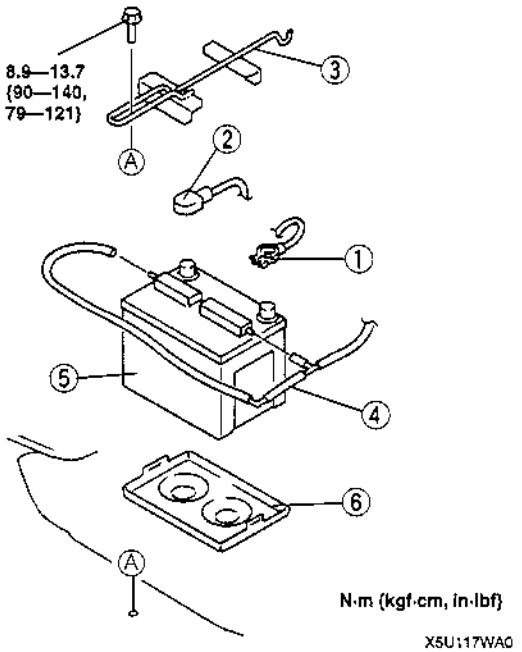

1	Negative battery cable
2	Positive battery cable
3	Battery clamp
4	Battery vent hose
5	Battery
6	Battery tray

BATTERY INSPECTION

X5U117W02

Battery

- Check the battery in the following procedure.

Step	Inspection		Action
1	Measure open circuit voltage of battery.	Above 12.4 V	Go to step 3.
		Below 12.4 V	Go to next step.
2	Quick charge for 30 minutes and reinspect voltage.	Above 12.4 V	Go to next step.
		Below 12.4 V	Replace battery.
3	Apply test load (see test load chart) to battery using a battery load tester and record battery voltage after 15 seconds. Is voltage more than specification?	Yes	Battery is okay.
		No	Replace battery.

Test load chart

Battery	Load (A)
S46A24L(S)	105

Battery positive voltage with load

Approximate battery temp.	Minimum voltage (V)
21 °C {70 °F}	9.6
15 °C {60 °F}	9.5
10 °C {50 °F}	9.4
4 °C {40 °F}	9.3
– 1 °C {30 °F}	9.1
– 7 °C {20 °F}	8.9
–12 °C {10 °F}	8.7
–18 °C { 0 °F}	8.5

Dark Current

1. Verify that the ignition switch is at the OFF position and that the ignition key has been removed.
2. Disconnect the negative battery cable.

Caution

- **Operating electrical loads while measuring the dark current can damage the circuit tester.**

3. Measure the dark current between the negative battery terminal and the negative battery cable.

Dark current
20 mA max.

4. If the current exceeds the maximum, remove the fuse in the main fuse block and the fuse block one by one while measuring the dark current.
5. Inspect and repair harnesses and connectors of the fuse at which the current reduces.

BATTERY RECHARGING

Warning

- **Hydrogen gas is produced during normal battery operation. A battery-related explosion can cause serious injury. Keep all flames (including cigarettes), heat, and sparks away from the top and surrounding area of open battery cells.**

Caution

- **When disconnecting the battery, remove the negative cable first and install it last to prevent damage to electrical components or the battery.**
- **To prevent damage to electrical components or the battery, turn all accessories off and stop the engine before performing maintenance or recharging the battery.**
- **Do not quick charge for over 30 minutes. It will damage the battery.**

1. Place a battery in a pan of water to prevent it from overheating. The water level should come up about halfway on the battery. Keep water off the top of the battery.

X5U117W03

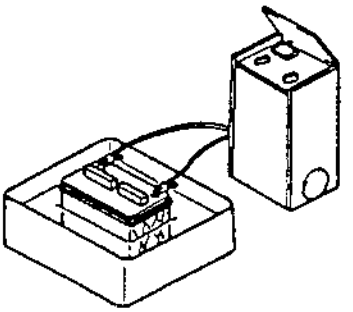

X5U117WA1

2. Connect a battery charger to the battery.
3. Adjust the charging current as follows.

Battery type (5-hour rate)	Slow charge (A)	Quick charge (A)/(30 min.)
S46A24L(S)(32)	3.0—4.0	20

4. After the battery has been recharged, measure the battery positive voltage and verify that the battery keeps specified voltage for more than 1 hour.

Specification
Above 12.4 V

5. If not as specified, replace the battery.

GENERATOR REMOVAL/INSTALLATION

X5U117W04

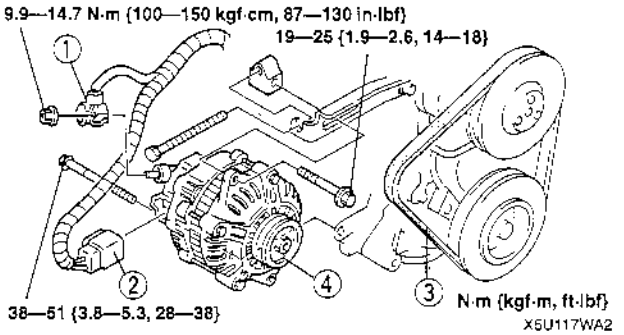

X5U117WA2

1	Terminal B wire
2	Connector
3	Drive belt
4	Generator

Warning

- **When the battery cables are connected, touching the vehicle body with generator terminal B will generate sparks. This can cause personal injury, fire, and damage to the electrical components. Always disconnect the battery before performing the following operation.**

1. Disconnect the negative battery cable.
2. Remove the intake manifold bracket.
3. Remove in the order indicated in the table.
4. Install in the reverse order of removal.
5. Inspect the drive belt deflection/tension. (Refer to 01–10 DRIVE BELT INSPECTION.)

GENERATOR INSPECTION

X5U117W05

Generator Warning Light

1. Verify that the battery is fully charged.
2. Verify that the drive belt deflection/tension is correct. (Refer to 01–10 DRIVE BELT INSPECTION.)
3. Turn the ignition switch to ON and verify that the generator warning light comes on.
4. If not, inspect the generator warning light, wiring harnesses between the battery, generator warning light, and PCM terminal 1Q. When the generator warning light and the wiring harnesses are okay, replace the PCM.
5. Verify that the generator warning light goes out after the engine is started.
6. If not, verify the diagnostic trouble code No.s displayed. (Refer to 01–01A ENGINE DIAGNOSTIC INSPECTION.)

Generator Voltage

1. Verify that the battery is fully charged.
2. Verify that the drive belt deflection/tension is within the specification. (Refer to 01–10 DRIVE BELT INSPECTION.)
3. Turn off all electrical loads.
4. Turn the ignition switch to START and verify that the generator turns smoothly without any noise while the engine is running.
5. Measure the voltage at the terminals shown in the table.

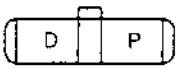

X5U117WA3

Standard voltage

Terminal	Ignition switch ON (V)	Idle (V) [20 °C {68 °F}]
	BP	BP
B	B+	13—15
P	Below 1	Approx. 3—8
D	Approx. 0	*

* : Turn the following electrical loads on and verify that the voltage reading increases.
- Headlights
- Blower motor
- Rear window defroster

6. If not as specified, disassemble and inspect the generator.

Current

1. Verify that the battery is fully charged.
2. Verify that the drive belt deflection/tension is correct. (Refer to 01–10 DRIVE BELT INSPECTION.)
3. Disconnect the negative battery cable.
4. Connect a circuit tester, capable of reading 120 A or over, between generator terminal B and the wiring harness.
5. Connect the negative battery cable.
6. Turn all electrical loads off.
7. Start the engine and increase the engine speed to 2,000—2,500 rpm.
8. Turn the following electrical loads on and verify that the current reading increases.
   - Headlights
   - Blower motor
   - Rear window defroster

Note

- Current required for generating power varies with electrical loads applied.

Standard current (Reference)

Measuring conditions
Room temperature: 20 °C {68 °F}
Voltage: 13.5 V
Engine hot

Engine speed (rpm)	Terminal B current (A)
	BP
1,000	Approx. 0—60 (must not be 0)
2,000	Approx. 0—68 (must not be 0)

9. If generator terminal B current will not increase, disassemble and inspect the generator.

01–18 IGNITION SYSTEM

IGNITION COIL REMOVAL/INSTALLATION

X5U118W02

1. Disconnect the negative battery cable.
2. Remove in the order indicated in the table.
3. Install in the reverse order of removal.

1	High-tension lead ☞ 01–18 HIGH-TENSION LEAD REMOVAL/INSTALLATION
2	Connector
3	Ignition coil

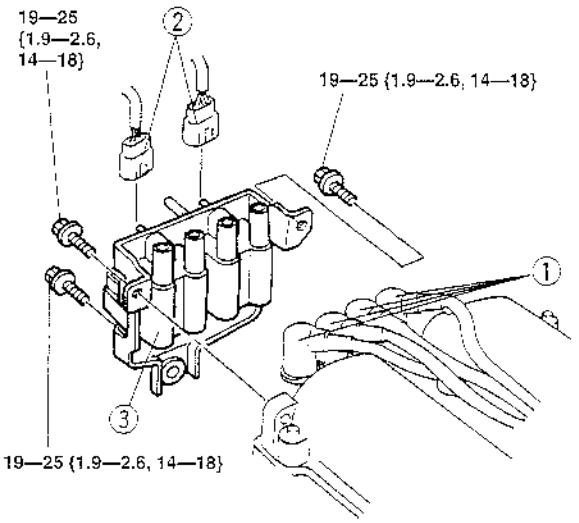

N·m {kgf·m, ft·lbf}

X5U118WA0

IGNITION COIL INSPECTION

X5U118W03

Igniter

- Carry out spark test. (Refer to 01–01A ENGINE SYSTEM INSPECTION, Spark Test.)

Ignition Coil Operation Inspection

1. Disconnect the negative battery cable.
2. Inspect the ignition coil power supply voltage (terminal 1A and 2A).

Specification
B+

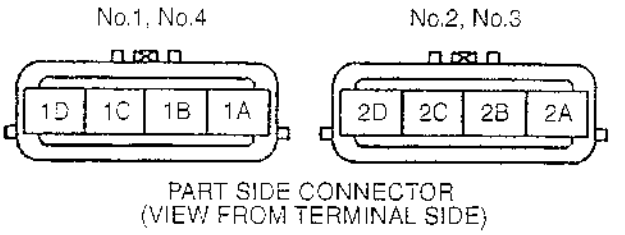

Y5L118WA1

3. If not as specified, inspect the power supply system harness (Ignition coil terminal 1A, 2A and ignition switch, including short cord.).
4. Inspect the ignition coil (terminal 1C and 2C) ground voltage.

Specification
0 V

5. If not as specified, inspect the ground system harness (Ignition coil terminal 1C, 2C and body ground.).
6. Pull the ignition coil connector 1D and 2D out using a pin tool (terminal disconnector).

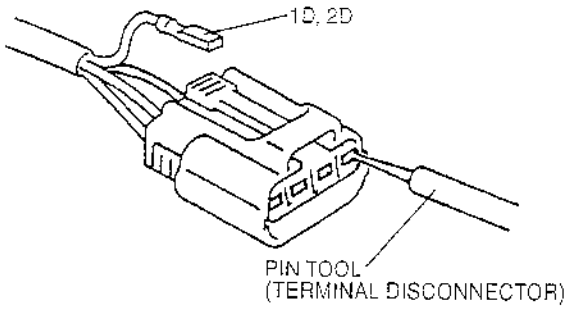

Y5U118WA2

7. Remove the spark plug, high–tension lead and ignition coil.
8. Connect the **SSTs** (NGS tester) as shown in the figure.

Note

- Using the signal simulation of **SST** apply a pseudo–pulse to the ignition coil and inspect its operation.
- Disconnect the ignition coil terminal 1D and 2D from the connectors in advance.

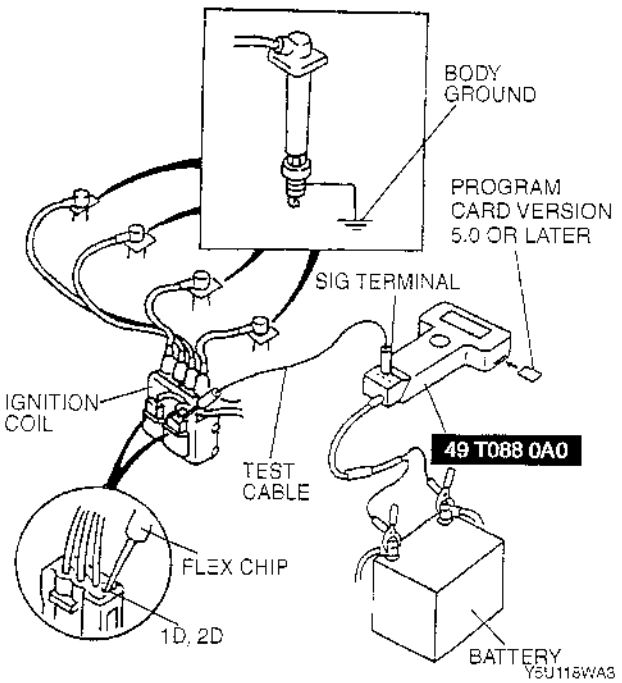

Y5U118WA3

9. Connect the negative battery cable.
10. Turn the ignition switch to ON.
11. Prepare the **SST** (NGS tester) in the following procedure.
    (1) Move the cursor to **DIGITAL MEASUREMENT SYSTEM.**
    (2) Press the **TRIGGER** key to enter this selection.

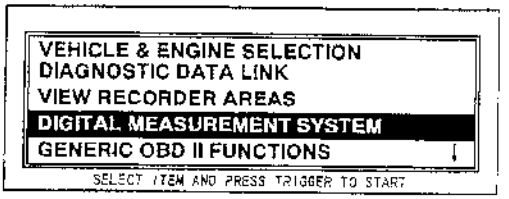

X3L140WAL

    (3) Move the cursor to **SIGNAL SIMULATION.**
    (4) Press the **TRIGGER** key to enter this selection.

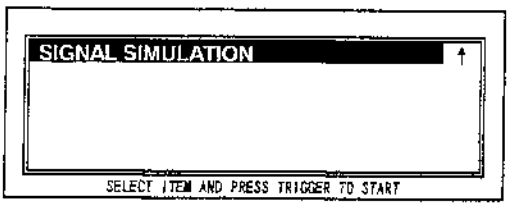

Y5U118WA4

    (5) Move the cursor and set the following:

Set value

FREQUENCY: 50Hz
LOW LEVEL: 0V
HIGH LEVEL: 5V
DUTY CYCLE: 50%
COUPLING: DC

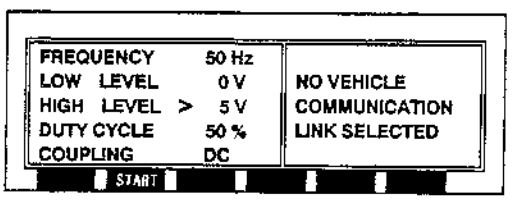

Y5U118WA5

Warning

- **Do not hold the spark plug, high–tension lead, or ignition coil while inspecting the ignition coil. You may be subjected to a strong shock.**

Note

- No.1 and No.4 cylinders and No.2 and No.3 cylinders are ignited simultaneously.

(6) Press **START**.

12. Verify that the spark plug produces a strong, pale spark when the cable from the SIG terminal of the **SST** (NGS tester) is connected to the ignition coil terminal 1D and 2D.

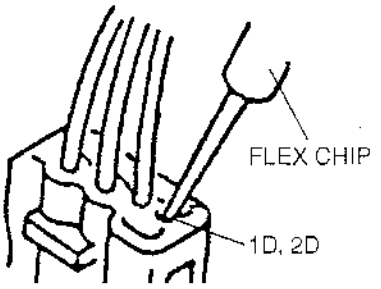

Y3U118WA6

13. If not as specified, replace the ignition coil.

Secondary Coil Winding

1. Disconnect the high-tension leads. (Refer to 01–18 HIGH-TENSION LEAD REMOVAL/INSTALLATION.)
2. Measure the resistance from lead hole 1 to 4, and lead hole 2 to 3 by using an ohmmeter.

Specification
8.24—12.36 kΩ [20 °C {68 °F}]

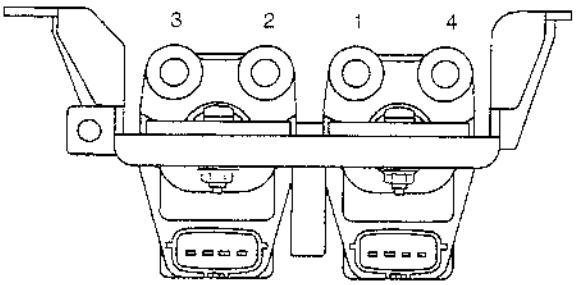

X5U118WA2

3. If not as specified, replace the ignition coil.

Insulation Resistance of Case

1. Disconnect the high-tension leads. (Refer to 01–18 HIGH-TENSION LEAD REMOVAL/INSTALLATION.)
2. Disconnect the ignition coil connector.
3. Measure the insulation resistance between terminal A, and ignition coil case by using a 500 V mega tester.

Specification
Above 10 MΩ

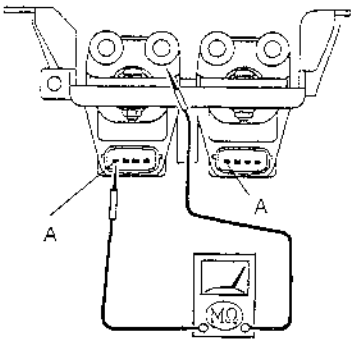

X5U118WA3

4. If not as specified, replace the ignition coil.

HIGH-TENSION LEAD REMOVAL/INSTALLATION

Caution

- **The high-tension leads must be reinstalled to their original positions. Incorrect installation can damage the leads and cause power loss, and negatively effect the electronic components.**
- **Pulling on the wire part of the high-tension lead may break it. To remove the lead, pull only on the boot.**

X5U118W04

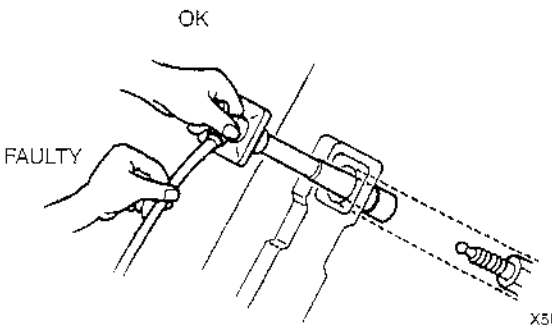

X5U118WA4

HIGH-TENSION LEAD INSPECTION

1. Measure the resistance of high-tension lead by using an ohmmeter.

Specification
No.1 lead: 4—11 kΩ
No.2 lead: 3—8 kΩ
No.3 lead: 2—6 kΩ
No.4 lead: 1—5 kΩ

X5U118W05

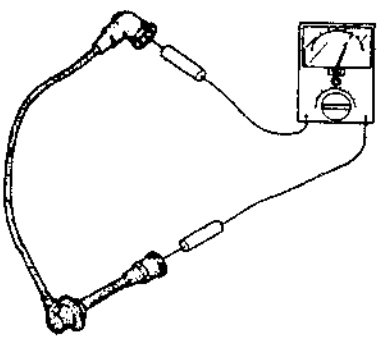

X5U118WA5

2. If not as specified, replace the high-tension lead.

SPARK PLUG REMOVAL/INSTALLATION

X5U118W06

Caution

- **To avoid breaking the spark plug, be sure to fit the socket squarely over it.**

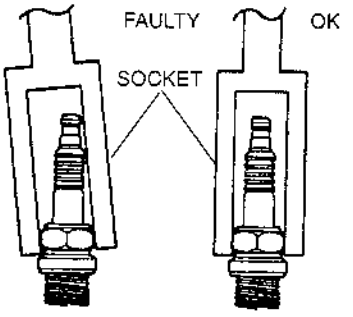

X5U118WA6

1. Disconnect the high-tension lead. (Refer to 01–18 HIGH-TENSION LEAD REMOVAL/INSTALLATION.)
2. Remove the spark plug.
3. Install in the reverse order of removal.

Tightening torque
15—22 N·m {1.5—2.3 kgf·m, 11—16 ft·lbf}

SPARK PLUG INSPECTION

X5U118W07

Check the following and replace the spark plugs as necessary.

1. Damaged insulation
2. Worn electrodes
3. Carbon deposits
   If cleaning is necessary, use a plug cleaner or a wire brush. Wipe upper insulator.
4. Damaged gasket

Plug gap
1.0—1.1 mm {0.040—0.043 in}

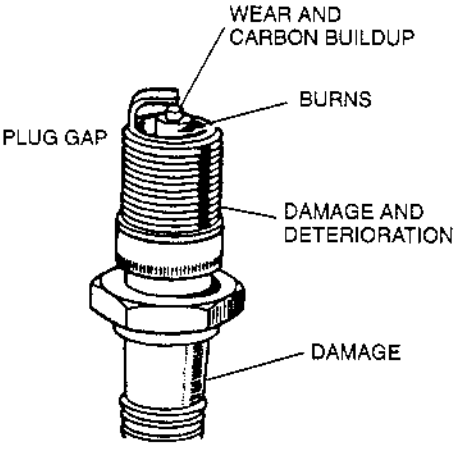

X5U118WA7

01–19 STARTING SYSTEM

STARTER REMOVAL/INSTALLATION

Warning

- **When the battery cable are connected, touching the vehicle body with starter terminal B will generate sparks. This can cause personal injury, fire, and damage to the electrical components. Always disconnect the battery before performing the following operation.**

1. Disconnect the negative battery cable.
2. Remove the intake manifold bracket.
3. Remove the oil filler tube. (AT)
4. Remove in the order indicated in the table.
5. Install in the reverse order of removal.

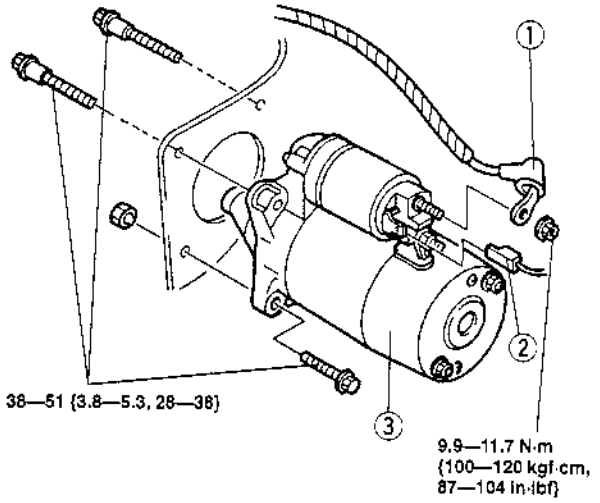

N·m {kgf·m, ft·lbf}

X5U119WA0

1	Terminal B wire
2	Terminal S wire
3	Starter ☞ Installation Note

X5U119W01

Starter Installation Note

1. Temporarily tighten the starter fitting bolt A.

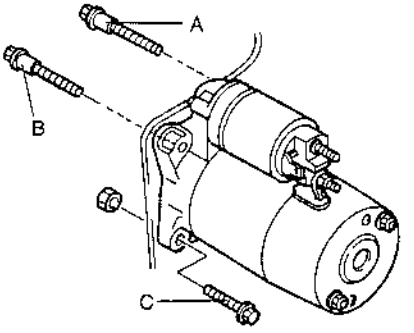

X5U119WA1

2. Tighten the starter fitting bolt B and C.

Tightening torque
38—51 N·m {3.8—5.3 kgf·m, 28—38 ft·lbf}

3. Tighten the starter fitting bolt A.

Tightening torque
38—51 N·m {3.8—5.3 kgf·m, 28—38 ft·lbf}

STARTER INSPECTION

X5U119W02

On-vehicle Inspection

1. Verify that the battery is fully charged.
2. Crank the engine and verify that the starter turns smoothly without any noise.
3. If not as specified, measure the voltage at terminals S and B when the ignition switch is in the START position.

Specification
Above 8 V

4. If the voltage is within the specification, remove the starter and inspect the magnetic switch and the starter.
5. If the voltage is not as specified, inspect the wiring harness, ignition switch, starter interlock switch (MT), and transmission range switch (AT).

No Load Test

1. Verify that the battery is fully charged.
2. Connect the starter, battery, voltmeter, and ammeter as shown.

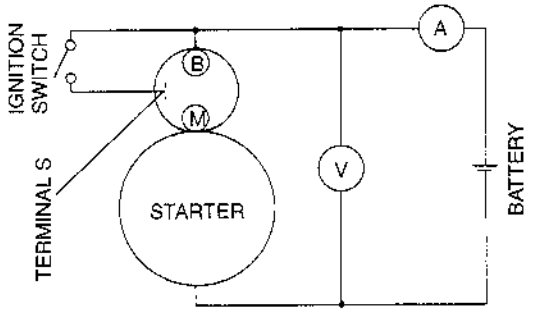

X5U119WA2

3. Operate the starter and verify that it turns smoothly.
4. Measure the voltage and current while the starter is operating.

Specification

Item	Engine
	BP
Voltage (V)	11
Current (A)	Below 90

5. If not as specified, repair or replace the inner parts as necessary.

Magnetic Switch Operation Inspection

Caution

- **Applying power for more than 10 seconds can damage the starter. Do not apply power for more than the aforementioned time.**

Pull-out test

Note

- In case the battery is being charged, the pinion may turn while in a protruded state. This is normal because the current flows to the motor through the pull-in coil and the motor turns.

1. Verify that the drive pinion is pulled out with battery positive voltage connected to terminal S and the starter body grounded.

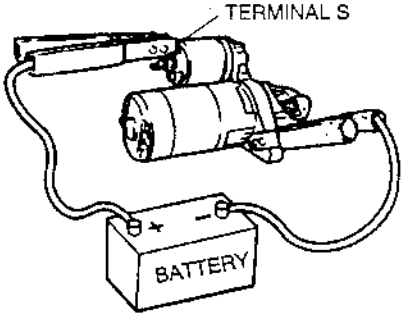

X5U119WA4

2. If not as specified, repair or replace the inner parts as necessary.

Return test

1. Disconnect the motor wire from terminal M.
2. Connect battery positive voltage to terminal M and ground the starter body.

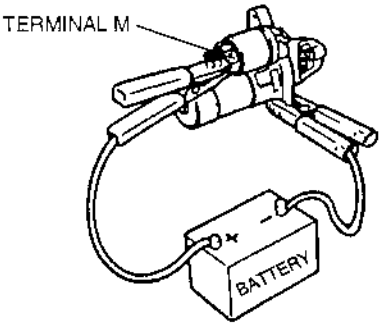

X5U119WA5

3. Pull out the drive pinion with a screwdriver. Verify that it returns to its original position when released.
4. If not as specified, repair or replace the inner parts as necessary.

Pinion Gap Inspection

1. Pull out the drive pinion with battery positive voltage connected to terminal S and the starter body grounded.

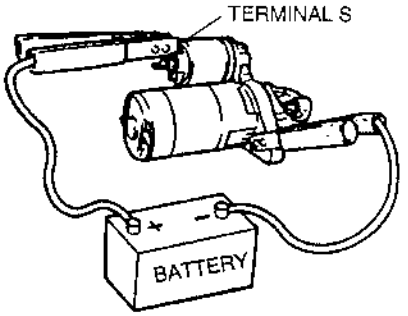

X5U119WA6

2. Measure the pinion gap while the drive pinion is pulled.

Specification
0.5—2.0 mm {0.020—0.078 in}

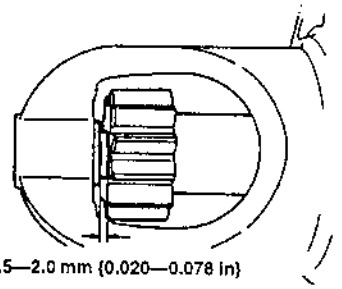

X5U119WA7

3. If not as specified, adjust with an adjustment washer (between drive housing front cover and magnetic switch).

Starter Inner Parts Inspection
Armature

1. Verify for no continuity between the commutator and the core at each segment by using an ohmmeter.

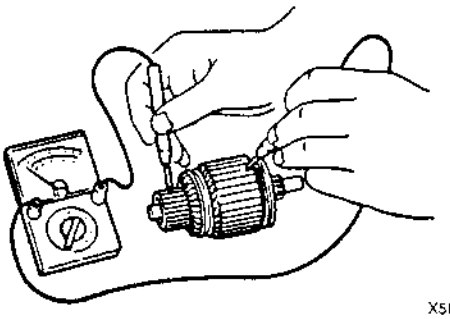

X5U119WA8

2. If there is continuity, replace the armature.
3. Verify for no continuity between the commutator and the shaft by using an ohmmeter.

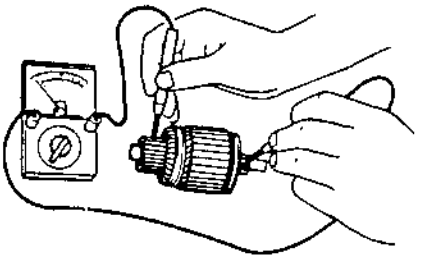

X5U119WA9

4. If there is continuity, replace the armature.
5. Place the armature on V-blocks, and measure the runout by using a dial indicator.

Runout
0.03 mm {0.001 in} max.

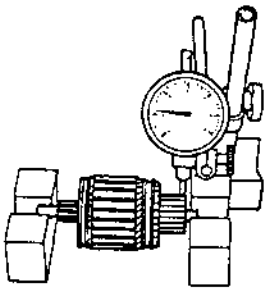

X5U119WAA

6. If not within the specification, repair by using a lathe or replace the armature.
7. Measure the commutator diameter.

Standard commutator diameter
29.4 mm {1.16 in}
Minimum commutator diameter
28.8 mm {1.14 in}

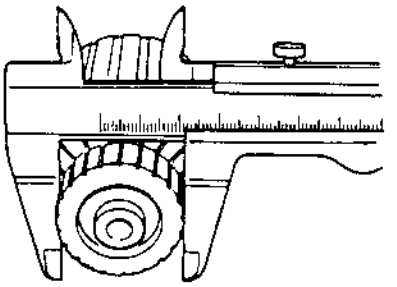

X5U119WAB

8. If not within the minimum specification, replace the armature.
9. Measure the segment groove depth of commutator.

Standard depth
0.5—0.8 mm {0.02—0.03 in}
Minimum depth
0.2 mm {0.008 in}

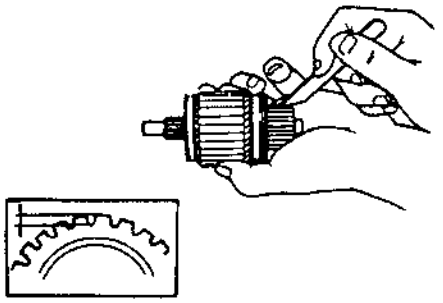

X5U119WAC

10. If not within the minimum specification, undercut the grooves to the standard depth.

Magnetic switch

1. Verify for continuity between terminals S and M by using an ohmmeter.

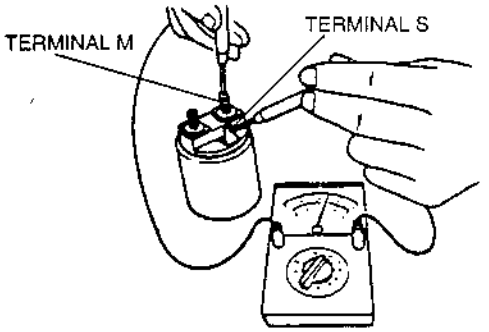

X5U119WAD

2. If there is no continuity, replace the magnetic switch.
3. Verify for continuity between terminal S and the body by using an ohmmeter.

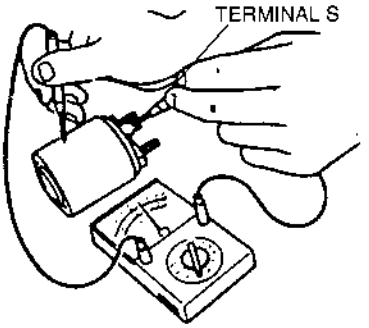

X5U119WAE

4. If there is no continuity, replace the magnetic switch.
5. Verify for no continuity between terminals M and B by using an ohmmeter.

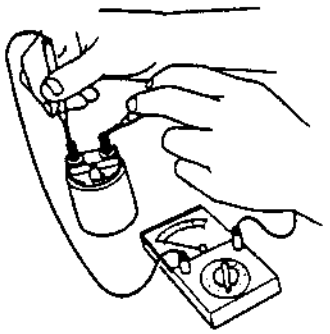

X5U119WAF

6. If there is continuity, replace the magnetic switch.

Brush and brush holder

1. Verify for no continuity between each insulated brush and the plate by using an ohmmeter.

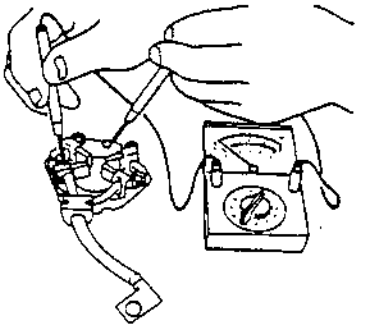

X5U119WAG

2. If there is continuity, replace the brush holder.
3. Measure the brush length.

Standard brush length
12.3 mm {0.48 in}
Minimum brush length
7.0 mm {0.28 in}

4. If any brush is worn almost to or beyond the minimum specification, replace all the brushes.

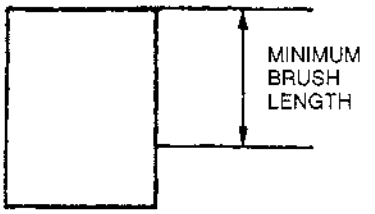

CONTACT FACE WITH COMMUTATOR

X5U119WAH

5. Measure the brush spring force by using a spring balance.

Standard spring force
15.05—20.35 N
{1.534—2.076 kgf, 3.375—4.567 lbf}
Minimum spring force
5.9 N {0.60 kgf, 1.32 lbf}

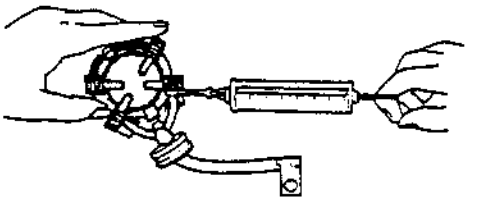

X5U119WAJ

6. If not within the minimum specification, replace the brush spring.

STARTER DISASSEMBLY/ASSEMBLY

X5U119W03

1. Disassemble in the order indicated in the table.
2. Assemble in the reverse order of disassembly.

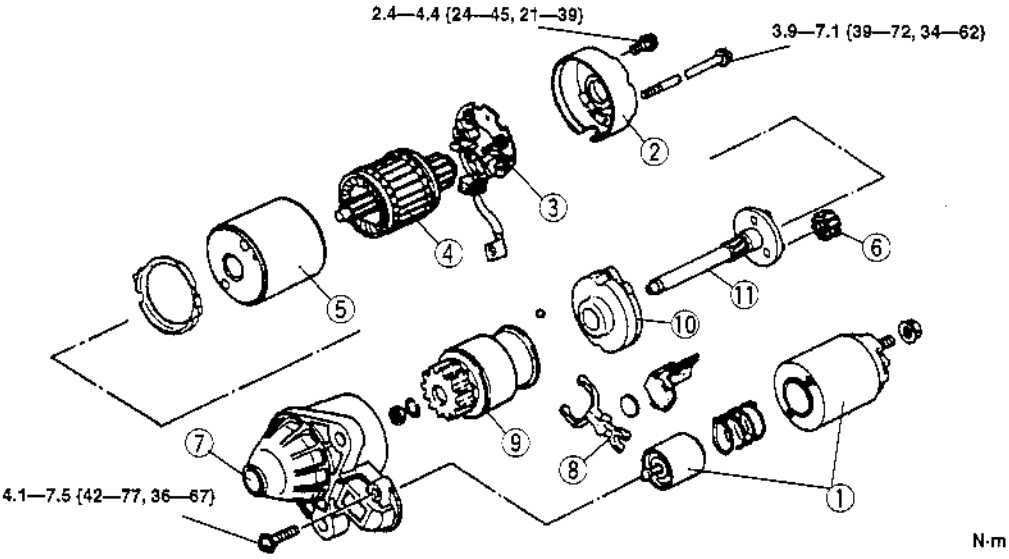

X5U119WAK

1	Magnetic switch
2	Rear housing
3	Brush and brush holder
4	Armature
5	Yoke
6	Planetary gear

7	Front cover
8	Lever
9	Drive pinion
10	Internal gear
11	Gear shaft

STARTER INTERLOCK SWITCH INSPECTION (MT)

X5U119W04

1. Disconnect the starter interlock switch connector.
2. Inspect for continuity between terminals of the starter interlock switch by using an ohmmeter.

Terminal	Condition	
	Clutch Pedal not depressed	Clutch Pedal depressed
B to C	No continuity	Continuity

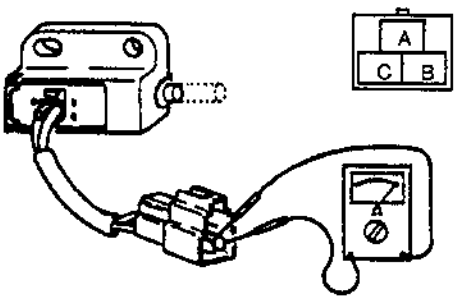

X5U119WA3

3. If not as specified, replace the starter interlock switch.

01–20 CRUISE CONTROL SYSTEM

CRUISE CONTROL MODULE REMOVAL/INSTALLATION

1. Disconnect the negative battery cable.
2. Remove the lower panel.
3. Remove the key interlock unit. (Refer to 05–14 KEY INTERLOCK UNIT REMOVAL/INSTALLATION.)
4. Remove in the order indicated in the table.
5. Install in the reverse order of removal.

X5U120W01

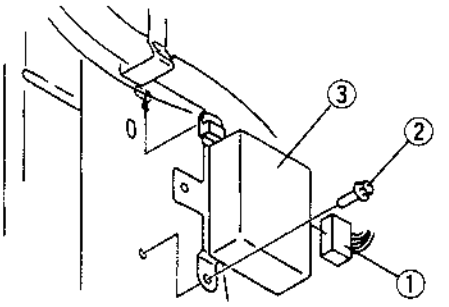

X5U120WA0

1	Cruise control module connector
2	Bolt
3	Cruise control module

CRUISE CONTROL MODULE INSPECTION

X5U120W02

1. Remove the lower panel.
2. Remove the key interlock unit. (Refer to 05–14 KEY INTERLOCK UNIT REMOVAL/INSTALLATION.)
3. Remove the cruise control module with the connector connected.
4. Measure the voltage at the cruise control module terminals as indicated below.
5. Disconnect the cruise control module connector before inspecting for continuity at terminal T.
6. If not as specified, inspect the parts listed under "Inspection area" and the related wiring harnesses.
7. If the parts and wiring harnesses are okay but the system still does not work properly, replace the cruise control module.

Terminal Voltage List (Reference)

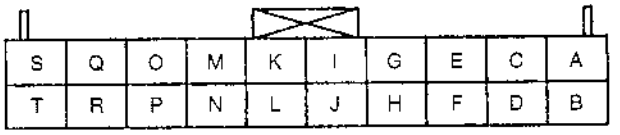

X5U120WA1

Terminal	Signal		Connection	Test condition		Voltage (V)/ Continuity	Inspection area
A	Cruise actuator control		Cruise actuator (Vent 1)	Ignition switch at ON	Cruise control main switch on	B+	• Brake switch • Cruise actuator
					Other	0	
B	Cruise actuator control		Cruise actuator (Vacuum)	Ignition switch at ON	Cruise control main switch on	B+	• Brake switch • Cruise actuator
					Other	0	
C	Cruise actuator control		Cruise actuator (Vent 2)	Ignition switch at ON	Cruise control main switch on	B+	• Brake switch • Cruise actuator
					Other	0	
D	Cruise set indicator light output		Cruise set indicator light	Ignition switch at ON		B+	• METER 15 A fuse • Instrument cluster
				Ignition switch at LOCK or ACC		0	
E	Cruise control main switch on/off		Cruise control main switch	Ignition switch at ON	Cruise control main switch on	B+	• METER 15 A fuse • Cruise control main switch
					Other	0	
F	—		Not used	—		—	—
G	O/D off		TCM	Ignition switch at ON		B+	TCM
				Ignition switch at LOCK or ACC		0	
H	Cruise actuator power supply		Brake switch	Ignition switch at ON	Cruise control main switch on	B+	—
					Other	0	
I	Test		Data link connector	—		—	—
J	AT	Selector lever position	Transmission range switch	Ignition switch at ON	Selector lever at N or P range	0	Transmission range switch
					Other	B+	
	MT	Clutch switch on/off	Clutch switch	Ignition switch at ON	Depress clutch pedal	0	Clutch switch
					Other	B+	
K	—		Not used	—		—	—
L	—		Not used	—		—	—
M	Brake switch on/off		Brake switch	Depress brake pedal		B+	Brake switch
				Release brake pedal		0	
N	Cruise control switch position		Cruise control switch	Ignition switch at ON and cruise control main switch on	SET/COAST switch hold on	Approx. 1.5	Cruise control switch
					RESUME/ACCEL switch hold on	Approx. 3.1	
					Other	Approx. 5	
O	Brake switch on/off		Brake switch	Ignition switch at ON and cruise control main switch on	Depress brake pedal	0	Brake switch
					Release brake pedal	B+	

Terminal	Signal	Connection	Test condition		Voltage (V)/ Continuity	Inspection area
P	Vehicle speed	Vehicle speedometer sensor	Ignition switch at ON and cruise control main switch on	Rear tires rotating	Alternates 0 and 5	• METER 15 A fuse • Instrument cluster
				Other	0 or 5	
Q	—	Not used	—		—	—
R	—	Not used	—		—	—
S	—	Not used	—		—	—
T	Cruise control module ground	GND	Constant: inspect for continuity to ground		Yes	GND

CRUISE ACTUATOR REMOVAL/INSTALLATION

X5U120W03

1. Disconnect the negative battery cable.
2. Remove in the order indicated in the table.
3. Install in the reverse order of removal.
4. Adjust the actuator cable. (Refer to 01–20 ACTUATOR CABLE ADJUSTMENT.)

1	Cruise actuator connector
2	Actuator cable
3	Vacuum hose
4	Nut
5	Bolt
6	Cruise actuator
7	Bracket

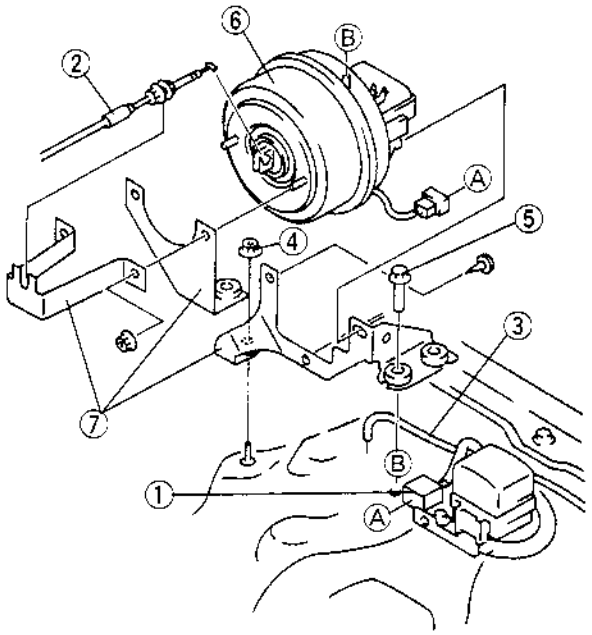

X5U120WA2

CRUISE ACTUATOR INSPECTION

X5U120W04

1. Disconnect the cruise actuator connector.
2. Disconnect the actuator cable from the cruise actuator.
3. Allow the engine to idle.
4. Confirm that the diaphragm is drawn into the cruise actuator when battery positive voltage is connected to terminal C and terminals A, B and D are connected to the ground.

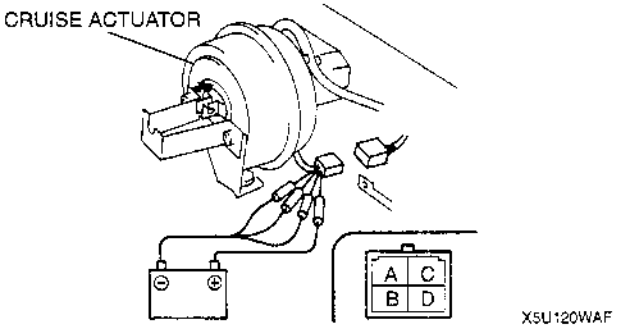

5. With the diaphragm being drawn into the cruise actuator, confirm that the diaphragm returns to its original position when terminals B and D are disconnected from the ground.

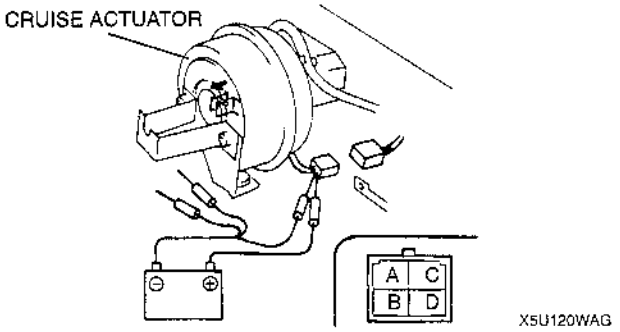

6. With the diaphragm returning to its original position, confirm that the diaphragm stops moving when terminal D is reconnected to the ground.

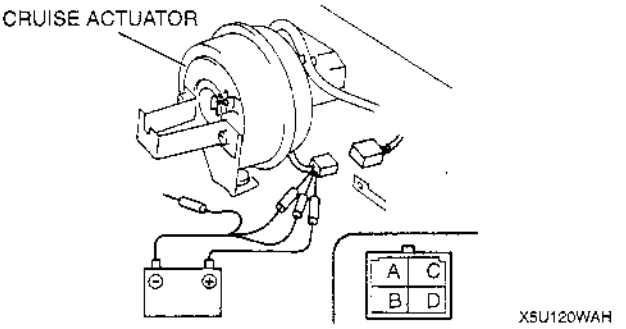

7. With the movement of the diaphragm stopped, confirm that the diaphragm returns completely to its original position when all terminals connected to the ground are disconnected.

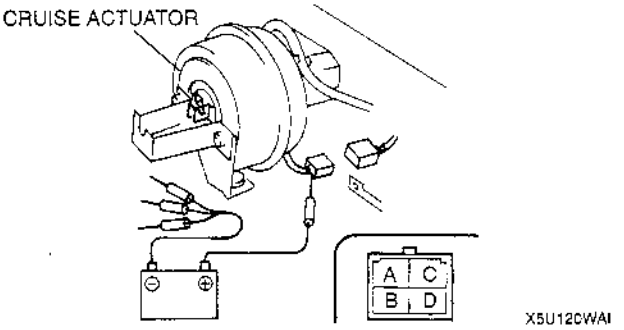

8. If not as specified, replace the cruise actuator.

ACTUATOR CABLE ADJUSTMENT

X5U120W09

1. Turn the adjusting nut as shown in the figure until the throttle lever starts moving to eliminate the actuator cable play.

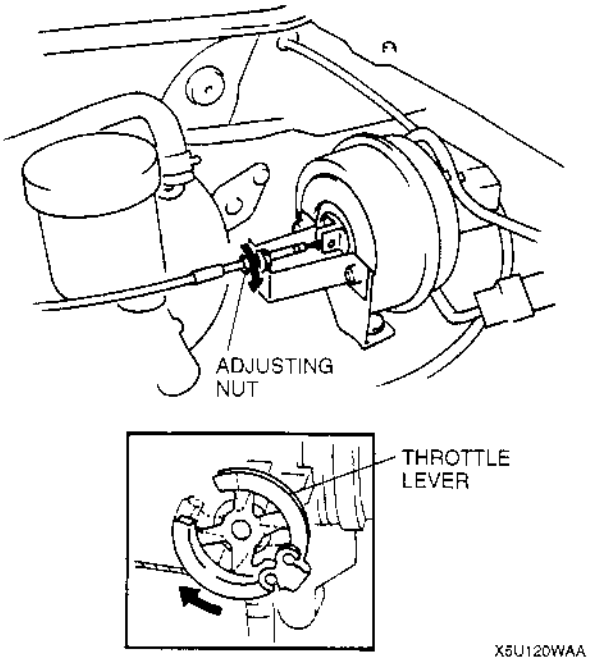

X5U120WAA

2. Turn the adjusting nut as shown in the figure to obtain **approximately 3 mm {0.12 in}** free play.

Note

- Turning the adjusting nut twice makes **3 mm {0.12 in}** free play.

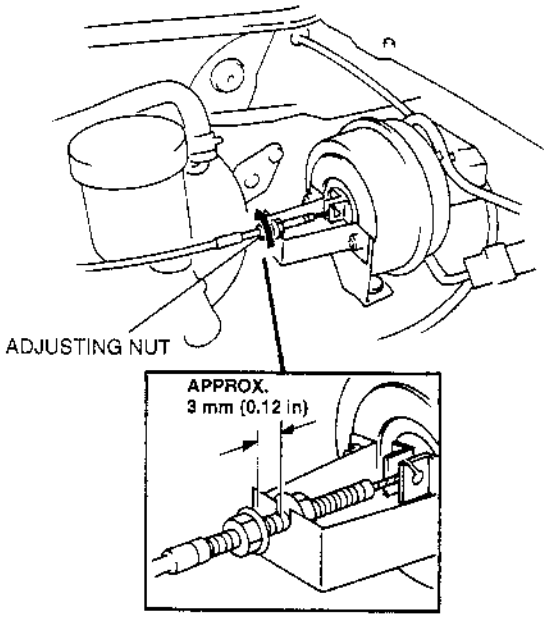

X5U120WAB

3. Tighten the inside nut.

ACTUATOR CABLE REMOVAL/INSTALLATION

X5U120W10

1. Loosen the nut, and remove the actuator cable.

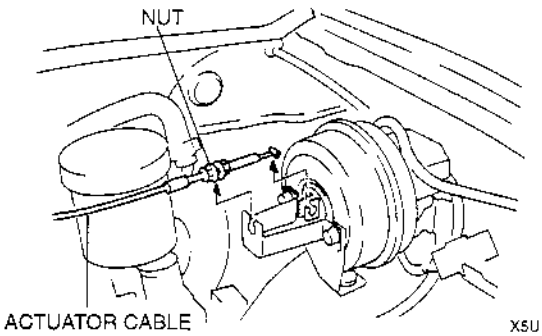

X5U120WAC

2. Press the hooks of the bush, and remove it from the accelerator pedal.

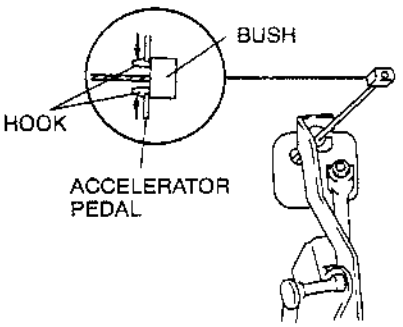

X5U120WAD

3. Press the hooks of the grommet, and remove it from the dash lower panel.

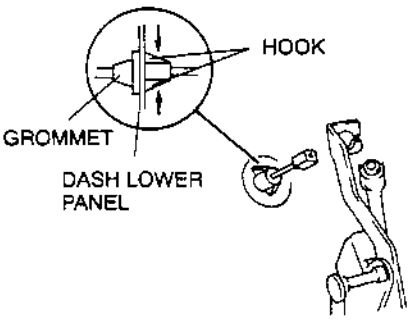

X5U120WAE

4. Push the actuator cable through the dash lower panel to remove it.
5. Install in the reverse order of removal.
6. Adjust the actuator cable. (Refer to 01–20 ACTUATOR CABLE ADJUSTMENT.)

CRUISE CONTROL MAIN SWITCH REMOVAL/INSTALLATION

X5U120W05

1. Disconnect the negative battery cable.
2. Remove the fuse block cover.
3. Push the hooks of the cruise control main switch and pull the switch out from inside of the dashboard.
4. Disconnect the cruise control main switch connector to remove the cruise control main switch.

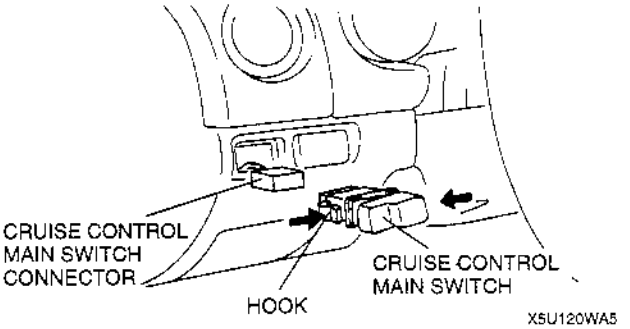

5. Install in the reverse order of removal.

CRUISE CONTROL MAIN SWITCH INSPECTION

X5U120W06

1. Remove the cruise control main switch. (Refer to 01–20 CRUISE CONTROL MAIN SWITCH REMOVAL/INSTALLATION.)
2. Inspect for continuity between the cruise control main switch terminals by using an ohmmeter.

○—○ : Continuity ○—ⓑ—○ : Bulb

Switch position	Terminal				
	A	B	C	D	F
Off	○—ⓑ—○		○	—ⓑ—	○
On	○—ⓑ—○		○	—○—ⓑ—	○

X5U120WA6

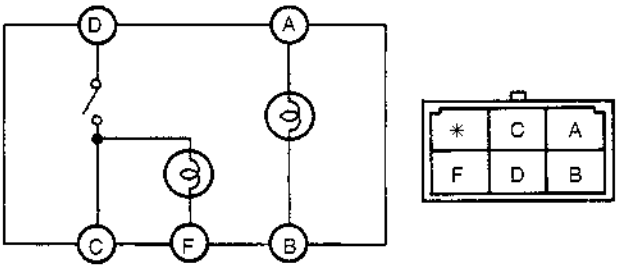

X5U120WA7

3. If not as specified, replace the cruise control main switch.

CRUISE CONTROL SWITCH REMOVAL/INSTALLATION

X5U120W07

- Refer to 09–18 COMBINATION SWITCH DISASSENBLY/ASSEMBLY.

CRUISE CONTROL SWITCH INSPECTION

X5U120W08

1. Remove the combination switch. (Refer to 09–18 COMBINATION SWITCH REMOVAL/INSTALLATION.)
2. Inspect for continuity between the cruise control switch terminals by using an ohmmeter.

O-W-O : Resistance

Switch position	Terminal	
	V	AE
SET/COAST	O——W——O :R_1	
Off		
RESUME/ACCEL	O——W——O : R_2	

R_1: 240 Ω R_2: 910 Ω

X5U120WA8

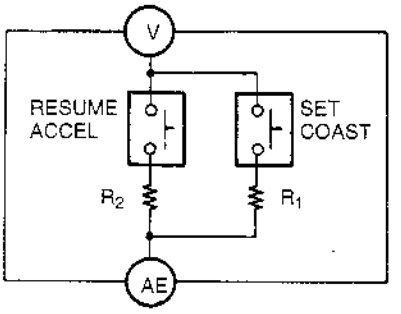

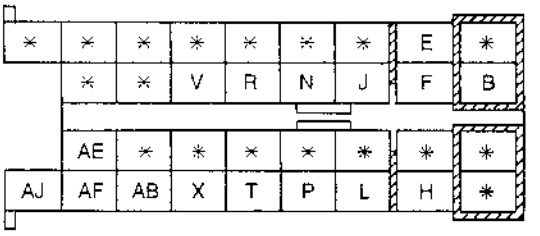

X5U120WA9

3. If not as specified, replace the wiper lever.

01–40 CONTROL SYSTEM

CONTROL SYSTEM COMPONENT LOCATION

X5U140W01

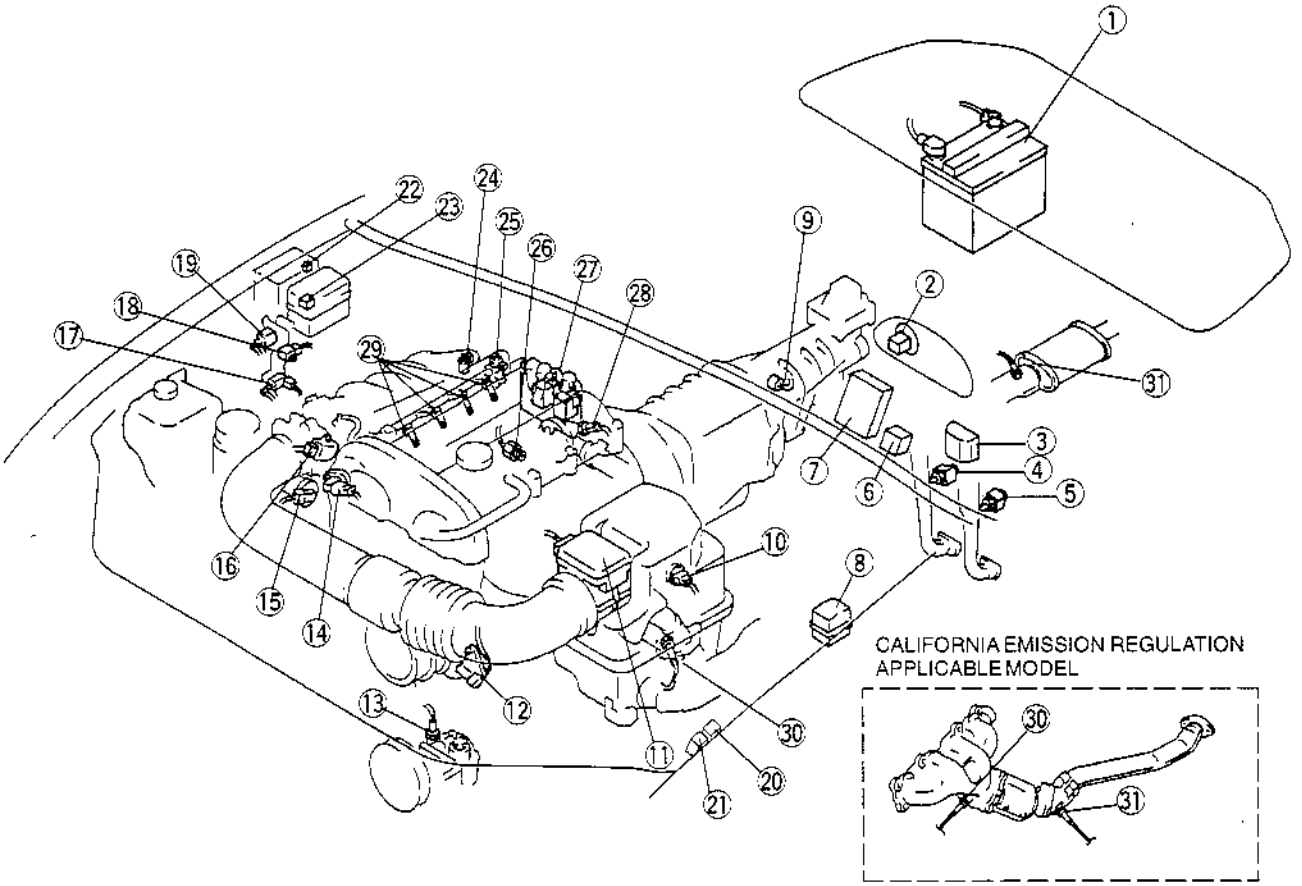

X5U140WA0

1	Battery
2	Vehicle speed sensor
3	DLC-2
4	Brake switch
5	Clutch switch (MT)
6	Fuel pump relay
7	PCM
8	DLC
9	Neutral switch (MT)
10	Intake air temperature sensor
11	Mass air flow sensor
12	Crankshaft position sensor
13	PSP switch
14	Camshaft position sensor
15	IAC valve
16	Throttle position sensor

17	Purge solenoid valve
18	EGR boost sensor
19	EGR boost sensor solenoid valve
20	Condenser fan relay
21	A/C relay
22	Cooling fan relay
23	Main relay
24	VICS solenoid valve
25	EGR valve
26	Knock sensor
27	Ignition coil
28	Engine coolant temperature sensor
29	Fuel injectors
30	Heated oxygen sensor (Front)
31	Heated oxygen sensor (Rear)

PCM REMOVAL/INSTALLATION

X5U140W02

1. Disconnect the negative battery cable.
2. Disconnect the connector from the PCM installed on the upper part of the brake pedal.
3. Remove the bolt and nut holding the PCM.

Note
- When removing the bolt.

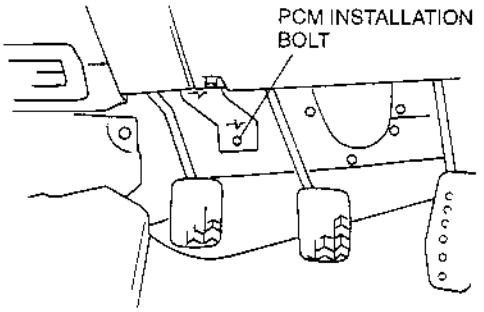

X5U140WA1

Note
- When removing the nut.

(1) Push the harness (PCM harness) installed to the brake pedal bracket in the opposite direction of the brake pedal bracket.

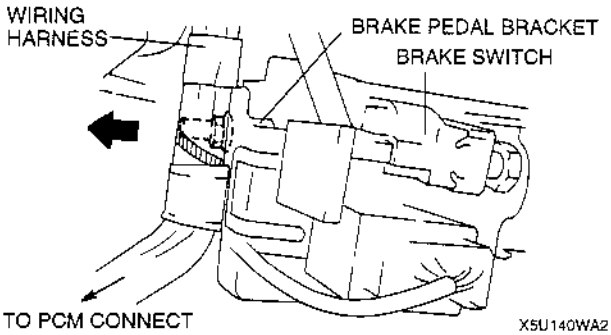

X5U140WA2

(2) While pushing the harness, push the stay until it comes apart from the stud with the PCM installation nut.
(3) Remove the PCM installation nut.

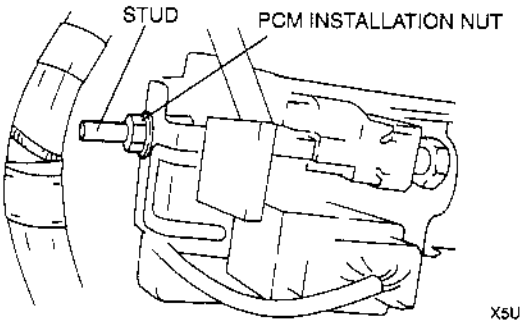

X5U140WA3

4. Install in the reverse order of removal.

Tightening torque
bolt, nut: 7.9—10.7 N·m
{80—110 kgf·cm, 70—95.4 in·lbf}

PID/DATA MONITOR INSPECTION

X5U140W03

Procedure

Note
- PIDs for the following parts are not available on this model. Go to the appropriate part inspection page.
- Engine coolant temperature sensor (Water temperature sender unit). (Refer to 01–40 ENGINE COOLANT TEMPERATURE SENSOR INSPECTION.)
- Camshaft position sensor. (Refer to 01–40 CAMSHAFT POSITION SENSOR INSPECTION.)
- Main relay. (Refer to 01–40 MAIN RELAY INSPECTION.)

1. Connect the NGS tester to the DLC-2. (Refer to 01–01A ENGINE ON-BOARD DIAGNOSTIC, On-Board Diagnostic Test.)
2. Turn the ignition switch on.
3. Select the "PID/DATA MONITOR AND RECORD" function on the NGS display and press TRIGGER. (Refer to 01–01A ENGINE ON-BOARD DIAGNOSTIC, PID/DATA Monitor and Record Procedure.)
4. Select the appropriate PID on the NGS display and press START.
5. Measure the PID value.

Note
- When measuring the following PID value, perform the following:
- FTP V PID. (Refer to 01–40 PID/DATA MONITOR INSPECTION, FTP V PID Inspection procedure.)
- BARO V PID. (Refer to 01–40 PID/DATA MONITOR INSPECTION, BARO V PID Inspection procedure.)
- TP V PID. (Refer to 01–40 PID/DATA MONITOR INSPECTION, TP V PID Inspection procedure.)

6. If PID value is not within the specification, follow the instruction in ACTION column.

Note
- Perform the SIMULATION TEST for the output device after PID/DATA measurement is completed.

• A/C RLY	• FTP V
• CDCV	• FAN3
• EGRBV	• IACV
• FP RLY	• VICSV
• FTP	• PRGV

Monitor item (Definition)	Unit/ Condition	Condition/Specification (Reference)	Action	PCM terminal
A/C RLY (A/C relay)	ON/OFF	A/C operating: ON Ignition switch ON: OFF	Inspect following PIDs: RPM, TP V, ECT V, A/C SW. Inspect A/C relay ☞ 07–40	1S
A/C SW (Refrigerant pressure switch)	ON/OFF	Refrigerant pressure switch and fan switch ON: ON Refrigerant pressure switch OFF: OFF	Inspect refrigerant pressure switch ☞ 07–40	1P
ALTF (Generator field coil control duty value)	%	Ignition switch ON: 0% Idle: 0—100% Generator operating → E/L ON: Duty value rise	Inspect following PIDs: IAT, IAT V, RPM, B+, B+2, ALTT V. Inspect generator ☞ 01–17	1O
ALTT V (Generator output voltage)	V	Ignition switch ON: 0 V Idle: B+ +1 V	Inspect following PIDs: IAT, IAT V, RPM, B+, B+2, ALTF. Inspect generator ☞ 01–17	1T
B+ (Battery positive voltage)	V	Ignition switch ON: B+	Inspect main relay ☞ 01–40 Inspect battery ☞ 01–17	1B
B+2 (PCM back-up positive voltage)	V	Constant: B+	Inspect battery ☞ 01–17	1H
BARO (Barometric pressure)	kPa Hg	Below 400 m {0.25 mile} above sea level: 99—103 kPa {29—30 inHg}	Inspect EGR boost sensor ☞ 01–40	3S
BARO V (Barometric pressure signal voltage)	V	Below 400 m {0.25 mile} above sea level: 4.1—4.3 V With pressure gauge: Vacuum reading –26.6 kPa {–200 mmHg, –7.85 inHg}: 3.0—3.4 V	Inspect EGR boost sensor ☞ 01–40	3S
BRK SW (Brake switch)	ON/OFF	Brake pedal depressed ON: ON Brake pedal released OFF: OFF	Inspect brake switch ☞ 04–11	1F

Monitor item (Definition)	Unit/ Condition		Condition/Specification (Reference)	Action	PCM terminal
CDCV (Canister drain cut valve)	ON/OFF		Ignition switch ON: OFF Idle: OFF	Inspect CDCV ☞ 01–16	3U
CHRGLMP (Generator warning light)	ON/OFF		Ignition switch ON: ON Idle: OFF	Inspect generator warning light ☞ 09–22	1Q
CLT SW (Clutch switch)	ON/OFF		Clutch pedal depressed: ON Others: OFF	Inspect clutch switch ☞ 01–40	3I
ECT (Engine coolant temperature)	°C	°F	Engine coolant temperature 20 °C {68 °F}: 20 °C {68 °F} Engine coolant temperature 60 °C {140 °F}: 60 °C {140 °F}	Inspect engine coolant temperature sensor ☞ 01–40	2E
ECT V (Engine coolant temperature signal voltage)	V		Engine coolant temperature 20 °C {68 °F}: 3.0—3.1 V After warms up: Below 1.0 V	Inspect engine coolant temperature sensor ☞ 01–40	2E
EGRBV (EGR boost sensor solenoid valve)	ON/OFF		Ignition switch ON: OFF Idle: OFF	Inspect EGR boost sensor solenoid valve ☞ 01–16	3T
FAN2 (Condenser fan control)	ON/OFF		Condenser fan operating (ECT above 108 °C {226 °F}) or terminal TEN ground and throttle valve open or A/C relay ON: ON Others: OFF	Inspect following PIDs: RPM, TP V, ECT V, A/C SW, TEN. Inspect condenser fan relay ☞ 07–40	1I
FAN3 (Cooling fan control)	ON/OFF		Cooling fan operating (ECT above 97 °C {207 °F}) or terminal TEN ground and throttle valve open or A/C relay ON: ON Others: OFF	Inspect following PIDs: RPM, TP V, ECT V, A/C SW, DLC. Inspect cooling fan relay ☞ 01–12	1R
FHO2S (Heated oxygen sensor (Front))	V		Ignition switch ON: 0—1.0 V After warms up: 0—1.0 V Acceleration: 0.5—1.0 V Deceleration: 0—0.5 V	Inspect heated oxygen sensor ☞ 01–40	2C
FHO2SH (Heated oxygen sensor heater (Front))	ON/OFF		Always: ON	Inspect following PIDs: ECT V, MAF V, Inspect heated oxygen sensor heater ☞ 01–40	1U
FP RLY (Fuel pump relay)	ON/OFF		Ignition switch ON: OFF Idle: ON Cranking: ON	Inspect following PID: RPM. Inspect fuel pump relay ☞ 01–14	3N
FTL V (Fuel tank level signal voltage)	V		Idle condition • Fuel tank full: 0.2—0.5 V • Fuel tank empty: 3.4—4.4 V • Fuel tank half: 1.8—2.8 V **Note** • The voltages above will be measured when the battery voltage is between 12 V to 14 V.	Inspect fuel level sender unit ☞ 09–22	3K
FTP (Fuel tank pressure)	kPa	Hg	Ignition switch ON: 0—1.0 kPa {0—0.3 inHg} Idle: 0—1.0 kPa {0—0.3 inHg} **Note** • The pressure and output voltage varies according to the fuel temperature.	Inspect fuel tank pressure sensor ☞ 01–40	2A

Monitor item (Definition)	Unit/ Condition	Condition/Specification (Reference)	Action	PCM terminal
FTP V (Fuel tank pressure signal voltage)	V	Ignition switch ON: 2.5—2.8 V Idle: 2.5—2.8 V Fuel tank pressure 0 kPa {0 mmHg}: 2.5 V Fuel tank pressure 1 kPa {7.5 mmHg}: 2.8 V With pressure gauge: • Vacuum reading –6.66 kPa {–50 mmHg, –1.97 inHg}: 0.45—0.55 V. • Vacuum reading 0 kPa {0 mmHg, 0 inHg}: 2.25—2.75 V. • Pressure reading 6.66 kPa {50 mmHg, 1.97 inHg}: 4.05—4.95 V. **Note** • The pressure and output voltage varies according to the fuel temperature.	Inspect fuel tank pressure sensor ☞ 01–40	2A
IACV (Idle air control valve)	ms	Ignition switch ON: 1.0 ms. Idle: 0.3—1.0 ms. Short terminal TEN: 0.3—0.7 ms.	Inspect following PIDs: IAT V, RPM, ECT V, MAF V, TP V, NL SW, CLT SW, PSP SW, A/C SW, TEN. Inspect idle air control valve ☞ 01–13	3M 3O
IAT (Intake air temperature)	°C / °F	Intake air temperature 20 °C {68 °F}: 20 °C {68 °F}	Inspect intake air temperature sensor ☞ 01–40	2B
IAT V (Intake air temperature signal voltage)	V	Intake air temperature 20 °C {68 °F}: 2.3—2.4 V Intake air temperature 30 °C {86 °F}: 1.9 V	Inspect intake air temperature sensor ☞ 01–40	2B
IGT (Ignition timing)	BTC	Idle: BTDC 6—18 ° Idle (Terminal TEN ground): BTDC 9—11 ° Cranking: 7 °	Inspect following PIDs: MAF V, IAT V, RPM, TP V, ECT V, PSP SW, NL SW, CLT SW, A/C SW, TEN, camshaft position sensor. Inspect Engine tune-up ☞ 01–10	3G 3H
INJ (Fuel injection duration)	ms	Ignition switch ON: 0 msec Idle: 1.5—4.0 msec	Inspect following PIDs: MAF V, IAT V, RPM, TP V, ECT V, NL SW, CLT SW, FHO2S, PSP SW, BRK SW, A/C SW, B+, camshaft position sensor	3W, 3X, 3Y, 3Z
KR (Knocking retard)	DEG	Ignition switch ON: 0° Idle: 0°	Inspect knock sensor ☞ 01–40	2F
MAFV (Mass air flow signal voltage)	V	Ignition switch ON: 0.9—2.0 V Idle: 1.7—2.4 V	Inspect mass air flow sensor ☞ 01–40	2L
MIL (Malfunction indicator light)	ON/OFF	Ignition switch ON: ON DTC output: ON No DTC output: OFF	Inspect malfunction indicator light ☞ 09–22	1E
NL SW (MT) (Neutral switch)	ON/OFF	Shift position at neutral: ON Others: OFF	Inspect neutral switch ☞ 01–40	1V
PRGV (Purge solenoid valve duty value)	%	Ignition switch ON: 0%	Inspect following PIDs: IAT V, RPM, ECT V, MAF V, TP V, BARO V, FHO2S, B+. Inspect purge solenoid valve ☞ 01–16	3L
PSP SW (PSP switch)	ON/OFF	Steering wheel is at straight ahead position: OFF Steering wheel is fully turned: ON	Inspect PSP switch ☞ 01–40	1G
RFC FLAG (Readiness Function Code)	ON/OFF	RFC exists: ON No RFC: OFF	—	—

Monitor item (Definition)	Unit/ Condition	Condition/Specification (Reference)	Action	PCM terminal
RHO2S (Heated oxygen sensor (Rear))	V	Ignition switch ON: 0—1.0 V Idle (After warms up): 0—1.0 V Idle (Engine cold): 0—0.5 V Accelerate: 0.5—1.0 V Decelerate: 0—0.5 V	Inspect heated oxygen sensor ☞ 01–40	3J
RHO2S (Heated oxygen sensor heater (Rear))	ON/OFF	Engine coolant temperature above 70 °C {158 °F}: ON Engine coolant temperature below 70 °C {158 °F}: OFF	Inspect following PIDs: ECT V, MAF V, Inspect heated oxygen sensor heater ☞ 01–40	3V
RPM (Engine speed)	rpm	Idle: 750—850 rpm	Inspect crankshaft position sensor ☞ 01–40	2J
SEGRP (EGR valve (stepping motor) position)	step	Ignition switch ON: 0 step Idle: 0 step Cranking: 0—60 steps	Inspect following PIDs: ECT V, TP V, Inspect EGR valve ☞ 01–16	2M, 2N, 2O, 2P
TEN (TEN terminal (DLC))	ON/OFF	Open terminal TEN: OFF Short terminal TEN: ON	Inspect the DLC TEN terminal and PCM connector terminal 1L	1L
TP V (Throttle position sensor signal voltage)	V	Closed throttle position: 0.1—1.1 V Wide open throttle: 3.0—4.6 V	Inspect throttle position sensor ☞ 01–40	3E
TR SW (AT) (Transmission range switch)	ON/OFF	P or N range: ON Others: OFF	Inspect transmission range switch ☞ 05–13	1V
VICSV (VICS solenoid valve)	ON/OFF	Ignition switch ON: ON Idle: ON Engine speed above 5250 rpm: OFF	Inspect following PID: RPM, Inspect VICS solenoid valve ☞ 01–13	3Q
VS (Vehicle speed)	KPH / MPH	Vehicle speed 20 km/h {12.5 mph}: 20 km/h {12.5 mph} Vehicle speed 40 km/h {25 mph}: 40 km/h {25 mph}	Inspect vehicle speed sensor ☞ 09–22	2D

FTP V PID Inspection Procedure

1. Confirm the ignition switch is turned on.
2. Confirm that the following PIDs are within the specifications:

   BARO
   101.3 kPa {760 mmHg, 29.9 inHg}
   (Absolute pressure)

   IAT
   30—100 °C {86—212 °F}

3. Disconnect the fuel tank pressure sensor connector and measure the voltage at fuel tank pressure sensor connector terminal C.

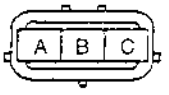

HARNESS SIDE CONNECTOR
(VIEW FROM TERMINAL SIDE)

X5U140WCK

   Voltage
   5.0 V

4. Reconnect the connector.
5. Disconnect the vacuum hose from the fuel tank pressure sensor. Connect the vacuum pump to the fuel tank pressure sensor.
6. Select FTP V PID on the NGS tester and press START.
7. Apply the vacuum and verify that the FTP V is as specified on the table.

BARO V PID Inspection Procedure

1. Confirm the ignition switch is turned on.
2. Confirm that the following PIDs are within the specifications:

   BARO
   101.3 kPa {760 mmHg, 29.9 inHg}
   (Absolute pressure)

   IAT
   10—50 °C {50—122 °F}

3. Disconnect the EGR boost sensor connector and measure the voltage at EGR boost sensor connector terminal C.

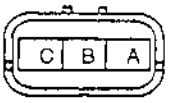

HARNESS SIDE CONNECTOR
(VIEW FROM TERMINAL SIDE)

X5U140WCD

Voltage
4.5—5.5 V

4. Reconnect the connector.
5. Disconnect the vacuum hose from the EGR boost sensor. Connect the vacuum pump to the EGR boost sensor.
6. Select BARO V PID on the NGS tester and press START.
7. Apply the vacuum and verify that the BARO V is as specified on the table.

Vref Terminal Circuit Inspection

1. Turn the ignition switch to ON.
2. Measure the voltage between the throttle position sensor connector (vehicle side) terminal A and body ground by using a voltmeter.
   (1) Measurement voltage is 0 V.
   ① Turn the ignition switch off.
   ② Disconnect the throttle position sensor connector, EGR boost sensor connector, and fuel tank pressure sensor connector (which is applied Vref).
   ③ Verify there is no continuity between the throttle position sensor connector (vehicle side) terminal A and body ground by using an ohmmeter.

THROTTLE POSITION
SENSOR CONNECTOR

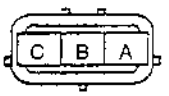

X5U140WA4

④ If there is continuity, repair the related harness for short to circuit.
⑤ Inspect continuity between the PCM connector (vehicle side) terminal 2I and each sensor connector (vehicle side) terminals which is applied Vref by using an ohmmeter.

PCM terminal	Connector (vehicle side)	Terminal
2I	Throttle position sensor	A
	EGR boost sensor	C
	FTP sensor	C

THROTTLE POSITION
SENSOR CONNECTOR

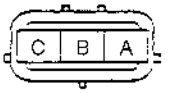

EGR BOOST
SENSOR CONNECTOR

FTP
SENSOR CONNECTOR

X5U140WA5

⑥ If there is continuity, repair the related harnesses.
(2) Measurement voltage is B+.
① Turn the ignition switch off.
② Disconnect the battery positive harness and battery negative harness.
③ Verify there is no continuity between the throttle position sensor connector (vehicle side) terminal A and battery positive harness by using an ohmmeter.

THROTTLE POSITION
SENSOR CONNECTOR

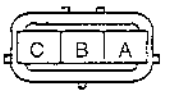

X5U140WA6

④ If there is continuity, repair the related harnesses for short to B+ circuit.
(3) Measurement voltage is approx. 5 V.
- Vref terminal of PCM is okay.

Ground Circuit Inspection

1. Turn the ignition switch off.
2. Disconnect the PCM connectors.
3. Inspect for continuity between the PCM ground terminals and body ground by using an ohmmeter.

PCM ground terminal
3A
3B
3C
3F

4. If not as specified, repair the related harnesses for open circuit.

Power Supply Circuit Inspection

1. Turn the ignition switch off.
2. Disconnect the PCM connectors.
3. Measure the voltage between the PCM battery power terminal connectors and body ground by using a voltmeter.

Power supply terminal
1A
1B (Ignition switch: ON)

Power supply terminal voltage
B+

4. If not as specified, repair the related harnesses and fuses.

Serial Communication Terminal Inspection

1. Turn the ignition switch off.
2. Disconnect PCM connectors.
3. Verify there is continuity between PCM connector terminal 1D and DLC-2 KLN terminal.

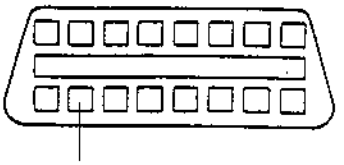

X5U140WCE

4. If not as specified, repair the related harnesses.

INTAKE AIR TEMPERATURE SENSOR INSPECTION

X5U140W04

Inspection of Resistance

Note
- Perform the following test only when detected.

1. Disconnect the intake air temperature sensor connector.
2. Remove the intake air temperature sensor.
3. Place the intake air temperature sensor in water with a thermometer, and heat the water gradually.
4. Measure the resistance of the intake air temperature sensor by using an ohmmeter.

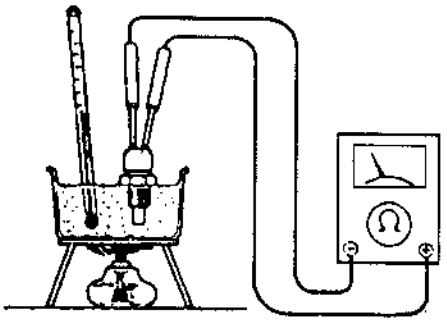

X5U140WA7

Specification

Water temperature (°C {°F})	Resistance (kΩ)
20 {68}	2.09—2.81
80 {176}	0.274—0.370

5. If not specified, replace the intake air temperature sensor. If intake air temperature sensor is okay, but PID value is out of specification, inspect as follows:

Open circuit
- Reference voltage circuit (Intake air temperature sensor connector terminal B and PCM connector terminal 2B.)
- Ground circuit (Intake air temperature sensor connector terminal A and PCM connector terminal 3F.)

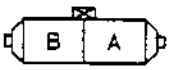

HARNESS SIDE CONNECTOR
(VIEW FROM TERMINAL SIDE)

X5U140WA8

Short circuit
- Intake air temperature sensor connector terminal B and PCM connector terminal 2B to ground.

6. Reconnect the intake air temperature sensor connector.

MASS AIR FLOW SENSOR INSPECTION

X5U140W05

Note
- Perform the following test only when detected.

1. Visually check for the following on the mass air flow sensor.
   - Damage
   - Cracks
   - Terminal bends
   - Terminal rust
2. If any of the above are found, replace the mass air flow sensor. If the above are found okay, but PID value is out of specification, inspect as follows:
   Open circuit
   - Mass air flow circuit (Mass air flow sensor connector terminal B and PCM connector terminal 2L.)
   - Power circuit (Mass air flow sensor connector terminal C and main relay terminal D through common connector.)
   - Ground circuit (Mass air flow sensor connector terminal A and PCM connector terminal 3C through common connector.)

MAIN RELAY

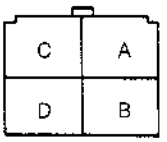

HARNESS SIDE CONNECTOR
(VIEW FROM TERMINAL SIDE)

X5U140WCF

MASS AIR FLOW SENSOR

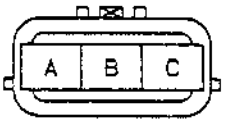

HARNESS SIDE CONNECTOR
(VIEW FROM TERMINAL SIDE)

X5U140WA9

Short circuit
- Mass air flow sensor connector terminal B and PCM connector terminal 2L to ground.
- Mass air flow sensor connector terminal C and main relay terminal D through common connector to ground.

3. Reconnect the mass air flow sensor connector.

Note
- The scan tool shows the MAF rate and load value.

Specification

	Intake MAF (g/s)		Engine load calculated value (%)	
	MT	AT	MT	AT
Idle*1	2.6—3.3	2.4—3.4	16.0—23.0	15.0—23.0
Engine speed 2,500 rpm*2	7.1—9.3	8.3—9.6	16.0—21.0	16.0—21.0

*1 : 750—850 rpm
*2 : No load, neutral or P position

THROTTLE POSITION SENSOR INSPECTION

X5U140W06

Note
- The throttle position sensor on this type of vehicle is a maintenance-free type.
- Perform the following test only when detected.

1. If not as PID value specified, inspect as follows:
   - Verify that the throttle valve is fully closed.
   - Accelerator cable the free play (Refer to 01–13.)
   - Throttle cable the free play (Refer to 01–13.)
   - Actuator cable the free play (Refer to 01–20.)
2. If above specified okay, but PID value is out of specification, inspect as follows:

   Open circuit
   - Reference voltage circuit (Throttle position sensor connector terminal A and PCM connector terminal 2I.)
   - Throttle position circuit (Throttle position sensor connector terminal C and PCM connector terminal 3E.)
   - Ground circuit (Throttle position sensor connector terminal B and PCM connector terminal 3F.)

HARNESS SIDE CONNECTOR
(VIEW FROM TERMINAL SIDE)

X5U140WAA

   Short circuit
   - Throttle position sensor connector terminal A and PCM connector terminal 2I to ground.
   - Throttle position sensor connector terminal C and PCM connector terminal 3E to ground.
3. Reconnect the throttle position sensor connector.
4. If correct the above open or short circuit, replace throttle position sensor.

THROTTLE POSITION SENSOR REPLACEMENT

X5U140W23

1. Disconnect the throttle position sensor connector.
2. Remove the attaching screws.
3. Remove the throttle position sensor.
4. Verify that the throttle valve is fully closed.
5. Catch the tang of the throttle body on the throttle position sensor plastic rotor.
6. Position the throttle position sensor on the throttle body so that the mounting holes align.
7. Install the attaching screws.

   Tightening torque
   1.6—2.3 N·m {16—24 kgf·cm, 14—20 in·lbf}
8. Release the throttle.
9. Verify the throttle position sensor PID value. (Refer to 01–40 PID/DATA MONITOR INSPECTION)
10. If not as PID value specified, carry out the THROTTLE POSITION SENSOR INSPECTION. If not as PID (TP V) condition, replace the throttle body.

ENGINE COOLANT TEMPERATURE SENSOR INSPECTION

X5U140W07

Inspection of Resistance

Note
- Perform the following test only when detected.

1. Drain the engine coolant. (Refer to 01–12 COOLING SYSTEM SERVICE WARNINGS.) (Refer to 01–12 ENGINE COOLANT REPLACEMENT.)
2. Disconnect the engine coolant temperature sensor connector.
3. Remove the engine coolant temperature sensor.
4. Place the sensor in water with a thermometer, and heat the water gradually.

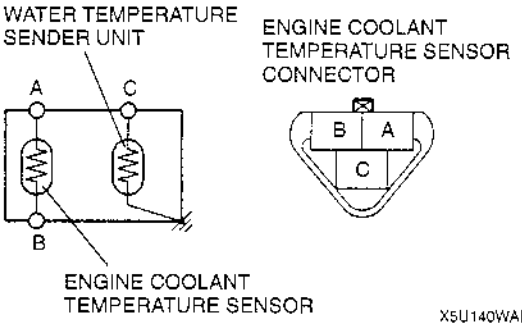

X5U140WAB

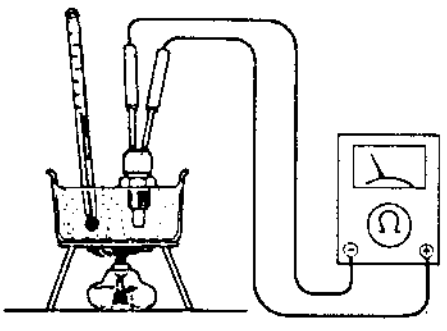

X5U140WAC

5. Measure the resistance between engine coolant temperature sensor terminals A and B by using an ohmmeter.

Specification

Water temperature (°C {°F})	Resistance (kΩ)
20 {68}	2.27—2.73
80 {176}	0.29—0.34

6. If not as specified, replace the engine coolant temperature sensor.
   If engine coolant temperature sensor is okay, but PID value is out of specification, inspect as follows:
   Open circuit
   - Reference voltage circuit (Engine coolant temperature sensor connector terminal A and PCM connector terminal 2E through common connector.)
   - Ground circuit (Engine coolant temperature sensor connector terminal B and PCM connector terminal 3F through common connector.)

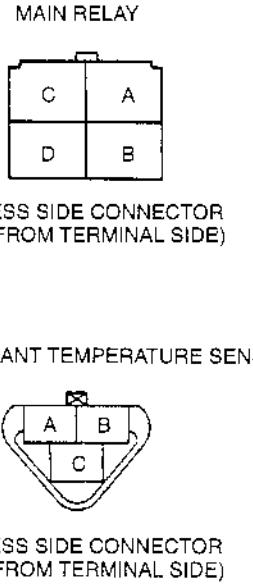

X5U140WCI

X5U140WCB

   Short circuit
   - Engine coolant temperature sensor connector terminal A and PCM connector terminal 2E through common connector to ground.
7. Reconnect the engine coolant temperature sensor connector.

Water Temperature Sender Unit Inspection

1. Drain the engine coolant. (Refer to 01–12 COOLING SYSTEM SERVICE WARNINGS.) (Refer to 01–12 ENGINE COOLANT REPLACEMENT.)
2. Remove the engine coolant temperature sensor.
3. Place the sensor in water with a thermometer, and heat the water gradually.

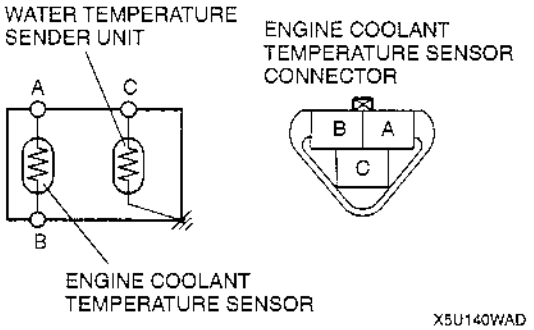

X5U140WAD

4. Measure the resistance between engine coolant temperature sensor terminals C and body ground by using an ohmmeter.

Specification

Water temperature (°C {°F})	Resistance (Ω)
50 {122}	160—230

5. If not as specified, replace the engine coolant temperature sensor.

CRANKSHAFT POSITION SENSOR INSPECTION

X5U140W08

Inspection of Air Gap

Note
- Perform the following test only when detected.

1. Measure the air gap between each four projections of the plate behind the crankshaft pulley and the crankshaft position sensor by using a feeler gauge. If not as specification, adjust the crankshaft position sensor air gap and inspect as follows:
   - Is any of the four projections of the plate behind the crankshaft pulley twisted or bent.

Specification
0.5—1.5 mm {0.020—0.059 in}

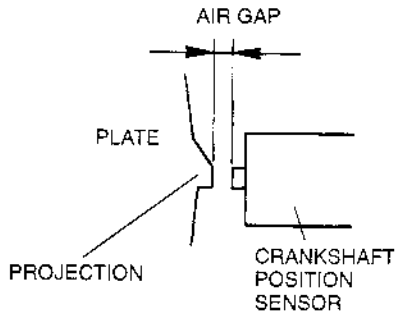

X5U140WAE

2. If not as specified, replace the plate behind the crankshaft pulley (Refer to 01–40 PLATE REMOVAL/INSTALLATION.) or crankshaft position sensor. (Refer to 01–40 CRANKSHAFT POSITION SENSOR REMOVAL/INSTALLATION.)
   If crankshaft position sensor PID value is out of specification, inspect as follows:
   Open circuit
   - Crankshaft position circuit (Crankshaft position sensor connector terminal B and PCM connector terminal 2J.)
   - Power circuit (Crankshaft position sensor connector terminal A and main relay terminal D through common connector.)
   - Ground circuit (Crankshaft position sensor connector terminal C and PCM connector terminal 3C through common connector.)

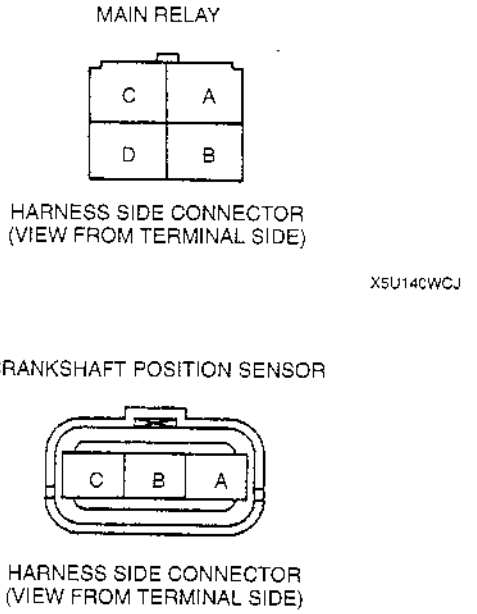

X5U140WCJ

X5U140WAI

Short circuit
- Crankshaft position sensor connector terminal B and PCM connector terminal 2J circuit through common connector to ground.
- Crankshaft position sensor connector terminal A and main relay terminal D through common connector to ground.

3. Reconnect the crankshaft position sensor connector.

CRANKSHAFT POSITION SENSOR ADJUSTMENT

X5U140W21

1. Loosen the crankshaft position sensor installation bolt.
2. While moving the crankshaft position sensor, adjust the air gap between the crankshaft position sensor and the four projections on the plate by using a feeler gauge.

Specification
0.5—1.5 mm {0.020—0.059 in}

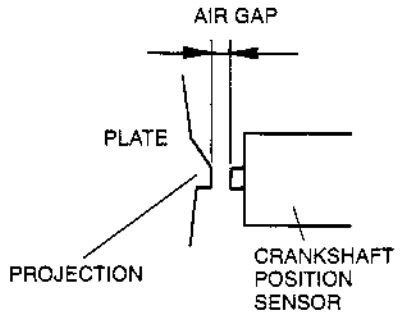

X5U140WAG

3. Tighten the crankshaft position sensor installation bolt.

Tightening torque
7.9—10.7 N·m
{80—110 kgf·cm, 69.5—95.4 in·lbf}

4. If not adjusted, replace the plate behind the crankshaft pulley (Refer to 01–40 PLATE REMOVAL/INSTALLATION.) or the crankshaft position sensor. (Refer to 01–40 CRANKSHAFT POSITION SENSOR REMOVAL/INSTALLATION.)

CRANKSHAFT POSITION SENSOR REMOVAL/INSTALLATION

X5U140W22

1. Disconnect the crankshaft position sensor connector.
2. Remove the undercover.
3. Remove the crankshaft position sensor installation bolt.
4. Install in the reverse order of removal.

Tightening torque
7.9—10.7 N·m
{80—110 kgf·cm, 69.5—95.4 in·lbf}

5. Reconnect the crankshaft position sensor connector.

Note
- Do not force fully pull the wiring harness of the crankshaft position sensor.

6. Adjust the air gap. (Refer to 01–40 CRANKSHAFT POSITION SENSOR ADJUSTMENT.)

PLATE REMOVAL/INSTALLATION

X5U140W24

1. Remove the drive belt.
2. Remove the crankshaft pulley.

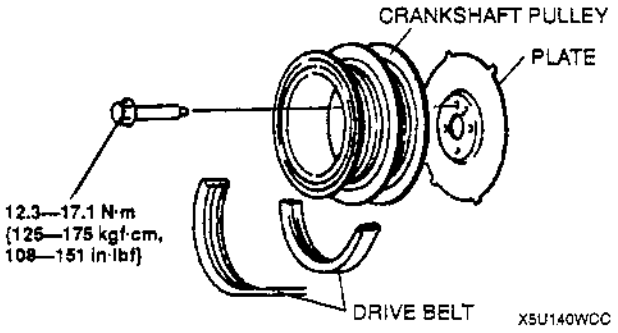

X5U140WCC

3. Remove the plate.
4. Install in the reverse order of removal.

Note
- Adjust the drive belt when installing the drive belt. (Refer to 01–10 DRIVE BELT ADJUSTMENT.)

CAMSHAFT POSITION SENSOR INSPECTION

Visual Inspection

1. Remove the camshaft position sensor. (Refer to CAMSHAFT POSITION SENSOR REMOVAL/INSTALLATION.)
2. Make sure that the camshaft position sensor is free of any metallic sharings or particles. If metallic sharings or particles are found on the sensor, clean them off.
3. Install the camshaft position sensor. (Refer to CAMSHAFT POSITION SENSOR REMOVAL/INSTALLATION.)

Frequency Inspection

1. Connect NGS tester to DLC-2.
2. Start the engine.
3. Move the cursor to **VEHICLE AND ENGINE SELECTION.**

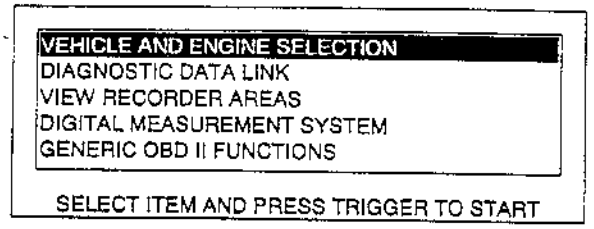

X5U140WAJ

4. Move the cursor to **SELECT NEW VEHICLE YEAR & MODEL.** Press the trigger key to enter this selection.

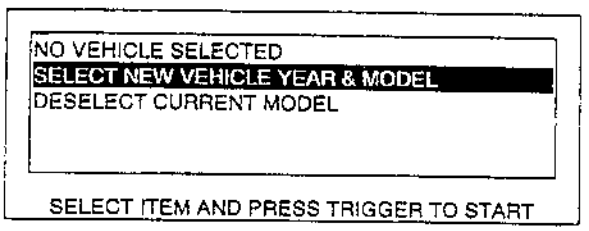

X5U140WAK

5. Move the cursor to **1999–VIN#10:X**. Press the trigger key to enter this selection.
6. Move the cursor to appropriate model. Press the trigger key to enter this selection.
7. The vehicle selection screen showing the selected vehicle will be displayed. Move the cursor to the vehicle selected. Press the trigger key.

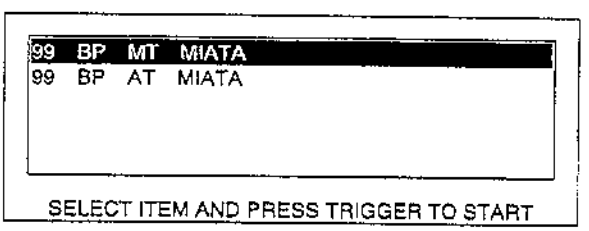

X5U140WAL

X5U140W09

8. Connect **NGS tester** test leads to the following PCM connector terminals:
   (+) lead — PCM 2H terminal
   (–) lead — PCM 3C terminal
9. Move the cursor to **DIGITAL MEASUREMENT SYSTEM.** Press the trigger key to enter this selection.

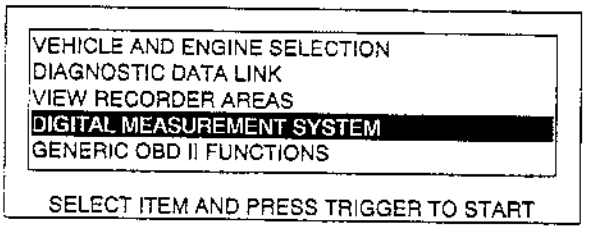

X5U140WAM

10. Move the cursor to **FREQUENCY METER**. Press the trigger key to enter this selection.

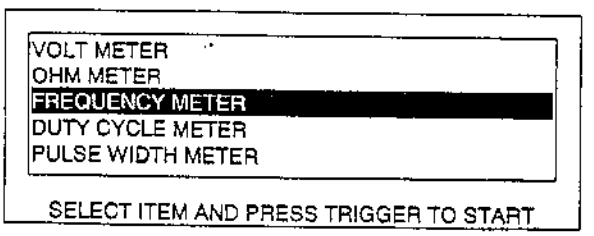

X5U140WAN

11. The **FREQUENCY METER** screen will be displayed. Press **LINK** key to select **RPM PID.**

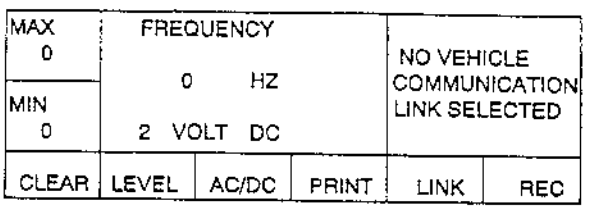

X5U140WAO

12. Move the cursor to **PID/DATA MONITOR**. Press trigger key to enter this selection.

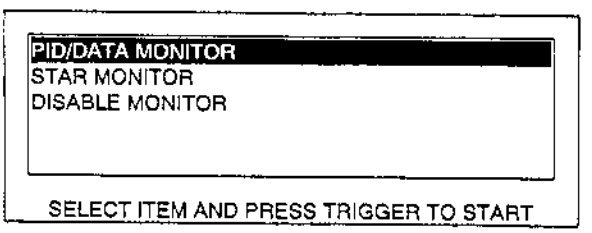

X5U140WAP

13. Move the cursor to **PCM**. Press trigger key to enter this selection.

PCM - POWERTRAIN CONTROL MODULE
ABS - ANTI LOCK BRAKE MODULE
CCM - CRUISE CONTROL MODULE
SELECT ITEM AND PRESS TRIGGER TO START

X5U140WAQ

14. Move the cursor to **RPM**. Press trigger key to select PID.

PCM 01	MIL		RHO2S	TP V	
	NL SW		RHO2SH	VICSV	
TOTAL01	PRGV	*	RPM	VS	
	PSP SW		SEGRP		
		CLEAR		START	

X5U140WAR

15. Press **START** to begin.
16. The **FREQUENCY METER** screen will be displayed.

Note

- The selected threshold voltage indicated on the **FREQUENCY METER SCREEN** should be **2 VOLT DC**. If incorrect threshold voltage is selected, incorrect frequency values is indicated. Press **LEVEL** to select correct threshold voltage if incorrect threshold voltage is selected.
- Threshold voltage should be DC range. Press **AC/DC** key to select DC range.

17. Inspect the frequency value and RPM PID.

Specifications
RPM PID: 750—850 RPM
FREQUENCY: 18—22 Hz

MAX 22	FREQUENCY			RPM 750RPM	
	19 HZ			IDLE 750~850	
MIN 18	2 VOLT DC				
CLEAR	LEVEL	AC/DC	PRINT	LINK	REC

X5U140WAS

Note

RPM PID	FREQUENCY
1000 RPM	25 Hz
2000 RPM	50 Hz
3000 RPM	75 Hz

18. Press **LEVEL** key to change the threshold voltage to **6 VOLT**.
19. Make sure that the **FREQUENCY** indicates **0 Hz**.
20. If **FREQUENCY** value is out of specifications, inspect follows:
    Open circuit
    - Camshaft position circuit (Camshaft position sensor connector terminal B and PCM connector terminal 2H.)
    - Power circuit (Camshaft position sensor connector connector terminal A and main relay terminal D through common connector.)
    - Ground circuit (Camshaft position sensor terminal C and body ground.)

MAIN RELAY

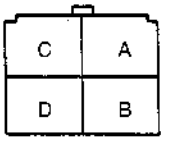

HARNESS SIDE CONNECTOR
(VIEW FROM TERMINAL SIDE)

X5U140WCG

CAMSHAFT POSITION SENSOR

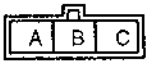

HARNESS SIDE CONNECTOR
(VIEW FROM TERMINAL SIDE)

X5U140WC6

Short circuit
- Camshaft position sensor connector terminal B and PCM connector terminal 2H to ground.
- Camshaft position sensor connector terminal A and main relay terminal D through common connector to ground.

21. Reconnect the camshaft position sensor connector.
22. Check the camshaft pulley for damage and cracks.

CAMSHAFT POSITION SENSOR REMOVAL/INSTALLATION

X5U140W25

1. Disconnect the negative battery cable.
2. Disconnect the camshaft position sensor connector.
3. Remove the camshaft position sensor installation bolt.
4. Remove the camshaft position sensor.
5. Make sure that the camshaft position sensor is free of any metallic sharings or particles. If metallic sharings or particles are found on the sensor, clean them off.
6. Install the camshaft position sensor in the reverse order of removal.

Tightening torque
7.9—10.7 N·m
{80—110 kgf·cm, 69.5—95.4 in·lbf}

KNOCK SENSOR INSPECTION

X5U140W10

Inspection of Resistance

Note
- Perform the following test only when detected.

1. Verify that the ignition switch off.
2. Disconnect knock sensor connector.
3. Measure the resistance between knock sensor terminal A and the knock sensor body by using an ohmmeter.

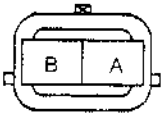

HARNESS SIDE CONNECTOR
(VIEW FROM TERMINAL SIDE)

X5U140WAT

Specification
Approx. 560 kΩ [20 °C {68 °F}]

4. If not as specified, replace the knock sensor. (Refer to 01–40 KNOCK SENSOR REMOVAL/INSTALLATION.) If knock sensor is okay, but PID value is out of specification, inspect as follows:
   Open circuit
   - Knock sensor circuit (Knock sensor connector terminal A and PCM connector terminal 2F through common connector.)

   Short circuit
   - Knock sensor connector terminal A and PCM connector terminal 2F through common connector to ground.
5. Reconnect the knock sensor connector.

KNOCK SENSOR REMOVAL/INSTALLATION

X5U140W20

1. Disconnect the negative battery cable.
2. Remove the intake manifold bracket.
3. Remove the knock sensor by using the **SST** (49 H018 001).

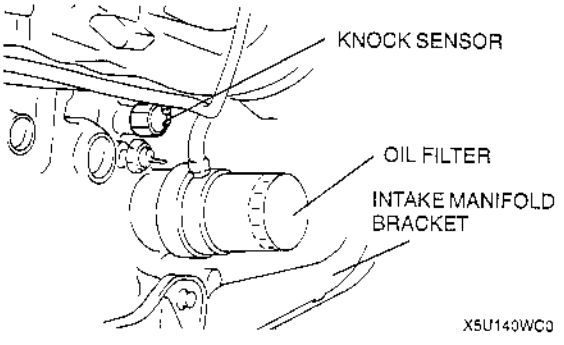

X5U140WC0

4. Install in the reverse order of removal.

Tightening torque
19.6—34.3 N·m
{2.0—3.5 kgf·m, 14.5—25.3 ft·lbf}

HEATED OXYGEN SENSOR INSPECTION

X5U140W19

Inspection of Voltage

Note
- Perform the following test only when detected.

1. Warm up the engine and run it at idle.
2. Disconnect the heated oxygen sensor connector.
3. Connect a voltmeter between the heated oxygen sensor connector terminal A and a ground.

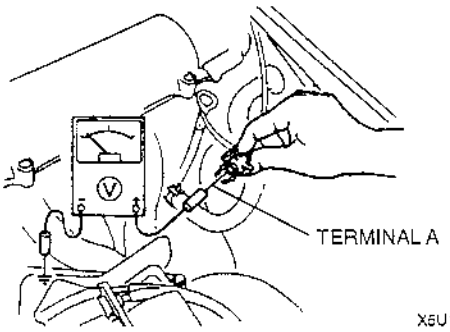

HEATED OXYGEN SENSOR CONNECTOR

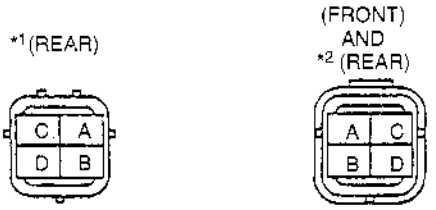

*1 : Except CALIFORNIA emission regulations applicable model.
*2 : CALIFORNIA emission regulations applicable model.

4. Run the engine at 3,000 rpm until the voltmeter indicates approx. 0—1.0 V.
5. Verify that when increase and decrease the engine speed suddenly several times.

Specification

Engine condition	Voltage (V)
Increased	0.5—1.0
Decreased	0—0.5

6. If not as specified, replace the heated oxygen sensor. If heated oxygen sensor is okay, but PID value is out of specification, inspect as follows:

Open circuit
- Heated oxygen circuit (Heated oxygen sensor connector terminal A and PCM connector terminal 2C (Front).)
- Ground circuit (Heated oxygen sensor connector terminal B and PCM connector terminal 3F through common connector (Front).)
- Heated oxygen circuit (Heated oxygen sensor connector terminal A and PCM connector terminal 3J (Rear).)
- Ground circuit (Heated oxygen sensor connector terminal B and PCM connector terminal 3F through common connector (Rear).)

(Except CALIFORNIA emission regulations applicable model)
- Heated oxygen circuit (Heated oxygen sensor connector terminal A and PCM connector terminal 3J through common connector (Rear).)

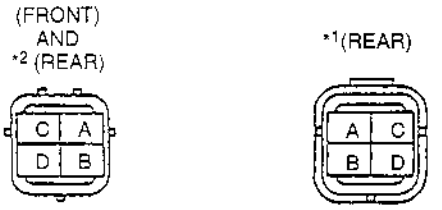

HARNESS SIDE CONNECTOR
(VIEW FROM TERMINAL SIDE)

X5U140WC9

*1 : Except CALIFORNIA emission regulations applicable model.
*2 : CALIFORNIA emission regulations applicable model.

Short circuit
- Heated oxygen sensor connector terminal A and PCM connector terminal 2C to ground (Front).
- Heated oxygen sensor connector terminal A and PCM connector terminal 3J to ground (Rear).

7. Reconnect the heated oxygen sensor connector.

HEATED OXYGEN SENSOR HEATER INSPECTION

X5U140W12

Inspection of Resistance

Note
- Perform the following test only when detected.

1. Disconnect the heated oxygen sensor connector.
2. Measure the resistance between heated oxygen sensor terminals C and D by using an ohmmeter.

HEATED OXYGEN SENSOR CONNECTOR

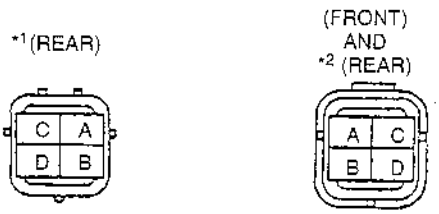

X5U140WC7

*1 : Except CALIFORNIA emission regulations applicable model.

*2 : CALIFORNIA emission regulations applicable model.

Specification
Approx. 15.7 Ω

3. If not as specified, replace the heated oxygen sensor.
   If heated oxygen sensor heater is okay, but PID value is out of specification, inspect as follows:
   Open circuit
   - Ground circuit (Heated oxygen sensor connector D and PCM connector terminal 1U through common connector (Front).)
   - Power circuit (Heated oxygen sensor connector terminal C and ignition switch (IG1) circuit through common connector (Front).)
   - Ground circuit (Heated oxygen sensor connector terminal D and PCM connector terminal 3V (Rear).)
   - Power circuit (Heated oxygen sensor connector terminal C and ignition switch (IG1) circuit through common connector (Rear).)

   (Except CALIFORNIA emission regulations applicable model)
   - Ground circuit (Heated oxygen sensor connector terminal D and PCM connector terminal 3V through common connector (Rear).)

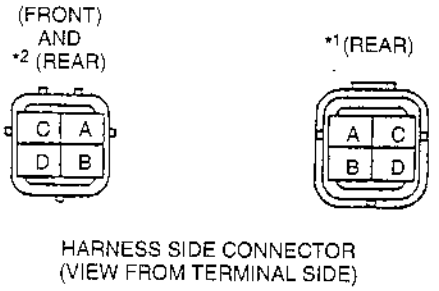

X5U140WCA

*1 : Except CALIFORNIA emission regulations applicable model.

*2 : CALIFORNIA emission regulations applicable model.

Short circuit
- Heated oxygen sensor connector terminal C and ignition switch (IG1) through common connector to ground heater circuit through common connector to ground (Front).
- Heated oxygen sensor connector terminal D and PCM connector terminal 1U through common connector to ground (Front).
- Heated oxygen sensor connector terminal D and PCM connector terminal 3V to ground (Rear).

(Except CALIFORNIA emission regulations applicable model)
- Heated oxygen sensor connector terminal D and PCM connector terminal 3V through common connector to ground (Rear).

4. Reconnect the heated oxygen sensor connector.

EGR BOOST SENSOR INSPECTION

X5U140W13

Note
- Perform the following test only when detected.

1. Inspect the EGR boost sensor for damage and cracks.
2. Vacuum hose improper routing, kinks or leaks.
3. If correct the above inspect, inspect as follows:
   Open circuit
   - EGR boost circuit (EGR boost sensor connector terminal B and PCM connector terminal 3S.)
   - Reference voltage circuit (EGR boost sensor connector terminal C and PCM connector terminal 2I.)
   - Ground circuit (EGR boost sensor connector terminal A and PCM connector terminal 3F through common connector.)

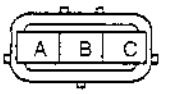

HARNESS SIDE CONNECTOR
(VIEW FROM TERMINAL SIDE)

X5U140WB0

   Short circuit
   - EGR boost sensor connector terminal C and PCM connector terminal 2I through common connector to ground.
   - EGR boost sensor connector terminal B and PCM connector 3S through common connector to ground.
4. Reconnect the EGR boost sensor connector.
5. If correct the above open or short circuit, replace EGR boost sensor.

CLUTCH SWITCH INSPECTION

X5U140W14

Inspection of Continuity

Note
- Perform the following test only when detected.

1. Verify that the clutch switch is installed properly. (Refer to 05–10 CLUTCH PEDAL REMOVAL/INSTALLATION.)
2. Disconnect the negative battery cable.
3. Remove the clutch switch. (Refer to 05–10 CLUTCH PEDAL REMOVAL/INSTALLATION.)
4. Inspect continuity between the clutch switch terminals by using an ohmmeter.

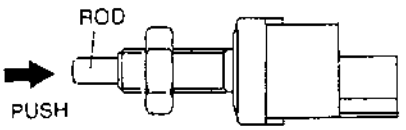

CLUTCH
SWITCH
CONNECTOR

X5U140WB1

Specification

○—○ : Continuity

Condition	Terminal	
	A	B
Push the rod	○	○
Except above		

X5U140WB6

5. If not as specified, replace the clutch switch. If clutch switch is okay, but PID value is out of specification, inspect as follows:
   Open circuit
   - Power circuit (Clutch switch connector terminal A and PCM connector terminal 3I through common connector.)
   - Ground circuit (Clutch switch connector terminal B and ground.)
   Short circuit
   - Clutch switch connector terminal A and PCM connector terminal 3I through common connector to ground.
6. Reconnect the clutch switch connector.

NEUTRAL SWITCH INSPECTION

X5U140W15

Inspection of Continuity

Note
- Perform the following test only when detected.

1. Disconnect the negative battery cable.
2. Remove the neutral switch.
3. Inspect for continuity between the neutral switch terminals by using an ohmmeter.

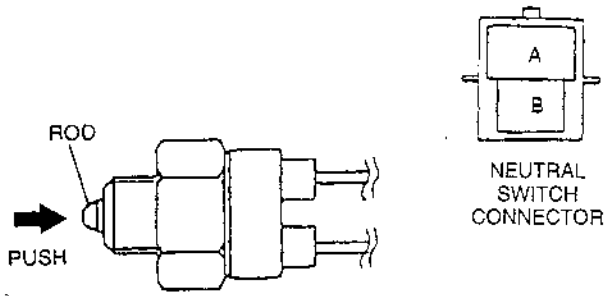

X5U140WB2

Specification

○—○ : Continuity

Measuring Condition	Terminal	
	A	B
Push the rod	○	○
Except above		

X5U140WB7

4. If not as specified, replace the neutral switch. If neutral switch is okay but PID value is out of specification, inspect as follows:
   Open circuit
   - Power circuit (Neutral switch connector terminal A and PCM connector terminal 1V through common connector.)
   - Ground circuit (Neutral switch connector terminal B and ground through common connector.)

   Short circuit
   - Neutral switch connector terminal A and PCM connector terminal 1V through common connector to ground.
5. Reconnect the neutral switch connector.

POWER STEERING PRESSURE SWITCH INSPECTION

X5U140W16

Inspection of Continuity

Note
- Perform the following test only when detected.

1. Inspect as follows if power steering is inoperative: (Refer to 06–12.)
   - POWER STEERING FLUID INSPECTION (Refer to 06–12.)
2. Disconnect the PSP switch connector.
3. Start the engine.
4. Inspect for continuity between PSP switch terminal and a ground by using an ohmmeter.

Specification

○—○ : Continuity

Condition	Terminal	
	A	Ground
Steering wheel not turned		
Steering wheel being turned	○	○

X5U140WB8

5. If not as specified, replace the PSP switch. If PSP switch is okay but PID value is out of specification, inspect as follows:
   Open circuit
   - Power circuit (PSP switch connector terminal and PCM connector terminal 1G through common connector.)
   - Ground circuit (PSP switch ground circuit.)

   Short circuit
   - PSP switch connector terminal and PCM connector terminal 1G through common connector to ground.
6. Reconnect the PSP switch connector.

MAIN RELAY INSPECTION

X5U140W17

Inspection of Continuity

Note
- Perform the following test only when detected.

1. Disconnect the negative battery cable.
2. Remove the main relay.

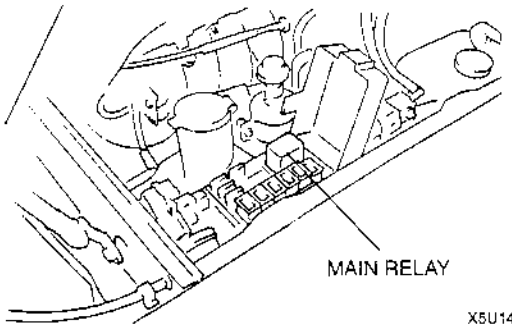

X5U140WB4

3. Inspect for continuity between terminals of the relay by using an ohmmeter.

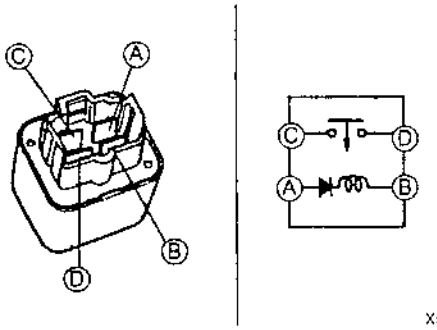

X5U140WB3

Specification

○—○ : Continuity

Step	Terminal			
	A	B	C	D
1	○—○			
2	B+	Ground	○—○	

X5U140WB9

4. If not as specified, replace the main relay, and inspect as follows:
   Open circuit
   - Reference voltage circuit (Main relay connector terminal A and ignition switch IG1 connector through common connector.)
   - Reference voltage circuit (Main relay connector terminal C and battery (B+ terminal) connector through common connector.)
   - Ground circuit (Main relay connector terminal B and ground circuit through common connector.)

   Short circuit
   - Main relay connector terminal A and ignition switch IG1 connector through common connector to ground.
   - Main relay connector terminal C and battery (B+ terminal) through common connector to ground.
5. Reconnect the main relay connector.

FUEL TANK PRESSURE SENSOR INSPECTION

X5U140W18

Note
- Perform the following test only when detected.

1. Inspect the fuel tank pressure sensor for damage and cracks.
2. Vacuum hose improper routing kinks or leaks.
3. If correct the above inspect, inspect as follows:
   Open circuit
   - Fuel tank pressure sensor connector terminal A and PCM connector 2A through common connector.
   - Reference voltage circuit (Fuel tank pressure sensor connector terminal C and PCM connector terminal 2I through common connector.)
   - Ground circuit (Fuel tank pressure sensor connector terminal B and PCM connector terminal 3F through common connector.)

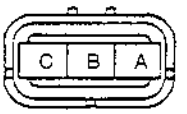

HARNESS SIDE CONNECTOR
(VIEW FROM TERMINAL CONNECTOR)

X5U140WB5

   Short circuit
   - Fuel tank pressure sensor connector terminal A and PCM connector terminal 2A through common connector to ground.
   - Fuel tank pressure sensor connector terminal C and PCM connector terminal 2I through common connector to ground.
4. Reconnect the fuel tank pressure sensor connector.
5. If correct the above open or short circuit, replace fuel tank pressure sensor.

01–50 TECHNICAL DATA

01 ENGINE

X5U150W01

Item			Engine BP MTX	Engine BP ATX
MECHANICAL				
Drive belt deflection (mm {in}/98 N {10 kgf, 22 lbf})	Generator	New	5.5—7.0 {0.22—0.27}	
		Used	6.0—7.5 {0.24—0.29}	
		Limit	8.0 {0.31}	
	P/S, A/C, P/S+A/C	New	8.0—9.0 {0.32—0.35}	
		Used	9.0—10.0 {0.36—0.39}	
		Limit	11.5 {0.45}	
Drive belt tension (N {kgf, lbf})	Generator	New	491—745 {50—76, 110—167}	
		Used	491—706 {50—72, 110—158}	
		Limit	343 {35, 77}	
	P/S, A/C, P/S+A/C	New	491—588 {50—60, 110—132}	
		Used	422—490 {43—50, 95—110}	
		Limit	245 {25, 55}	
Valve clearance [Engine cold] (mm {in})	IN		0.18—0.24 {0.008—0.009} (0.21 ± 0.03 {0.008 ± 0.0012})	
	EX		0.28—0.34 {0.012—0.013} (0.31 ± 0.03 {0.012 ± 0.0012})	
Compression pressure (kPa {kgf/cm², psi}) [rpm]	Standard		1442 {14.7, 209} [300]	
	Minimum		1009 {10.29, 146} [300]	
	Maximum difference between cylinders		196 kPa {2.0 kgf/cm², 28 psi}	
Tensioner spring free length (mm {in})			59.2 {2.33}	
Timing belt deflection (mm {in}/98 N {10 kgf, 22 lbf})			8.5—11.5	
Pushing distance of the camshaft oil seal (mm {in})			0—0.4 {0—0.015} (from the edge of the cylinder head)	
Pushing distance of the front oil seal (mm {in})			0.5—1.0 {0.02—0.03} (from the edge of the oil pump body)	
Pushing distance of the rear oil seal (mm {in})			0—0.5 {0—0.019} (from the edge of the rear cover)	
Idle speed (rpm)			750—850 (800 ± 50)	
Ignition timing (BTDC/rpm)			6—18°/750—850 (6—18°/800 ± 50)	
Idle-up speed*1 (rpm)	E/L ON*2		750—850 (800 ± 50)	
	A/C ON*3		900—1000 (950 ± 50)	750—850 (800 ± 50)
	P/S ON*4		750—850 (800 ± 50)	
Idle mixture	HC concentration		within the regulation	
	CO concentration		within the regulation	
LUBRICATION SYSTEM				
Oil pressure (kPa {kgf/cm², psi}) [3000 rpm]			295—392 {3.0—4.0, 43—56}	
Oil capacity	Total (dry engine) (L {US qt, Imp qt})		4.0 {4.2, 3.5}	
	Oil replacement (L {US qt, Imp qt})		3.6 {3.8, 3.2}	
	Oil and oil filter replacement (L {US qt, Imp qt})		3.8 {4.0, 3.3}	

Item					Engine BP MTX / ATX
Engine oil					API Service SG (Energy Conserving II), SH (Energy Conserving II) or ILSAC (GF-I) SJ or ILSAC (GF-II)
Viscosity	Above –25 °C {–13 °F}				SAE 10W–30
	Below 0 °C {32 °F}				SAE 5W–30
COOLING SYSTEM					
Coolant capacity				(L {US qt, Imp qt})	6.0 {6.3, 5.3}
Radiator cap valve opening pressure				(kPa {kgf/cm², psi})	94—122 {0.95—1.25, 13.5—17.7}
Thermostat	Initial-opening temperature			(°C {°F})	83.5—88.0 {183—190}
	Full-opening temperature			(°C {°F})	100 {212}
	Full-open lift			(mm {in})	8.5 {0.33} min.
Cooling fan motor current				(A) [12 V]	below 6.49
FUEL SYSTEM					
Fuel pump hold pressure				(kPa {kgf/cm², psi})	More than 340 {3.5, 50}
Fuel pump maximum pressure				(kPa {kgf/cm², psi})	Less than 640 {6.5, 92}
Fuel injector		Leakage			Less than 1 drop/2 minutes
		Volume		(ml {cc, floz}/15 sec.)	66—82 {66—82, 2.3—2.7}
		Resistance		(Ω)	12—16 [at 20 °C {68 °F}]
Pressure regulator		Fuel line pressure		(kPa {kgf/cm², psi})	370—420 {3.7—4.3, 53—61}
		Fuel hold pressure		(kPa {kgf/cm², psi})	More than 250 {2.55, 36.3}
CHARGING SYSTEM					
Battery	Electrolyte gravity				—
	Dark current*5			(mA)	Max. 20
	Test load chart (A)	Battery type	S46A24L (S)		105
	Slow charge (A)	Battery type (5-hour rate)	S46A24L (S) (32)		3.0—4.0
	Quick charge (A/30 min)	Battery type (5-hour rate)	S46A24L (S) (32)		20
Generator	Rotor resistance (Between slip rings)			(Ω)	2.67 [20 °C {68 °F}]
	Brush length	Standard		(mm {in})	22 {0.87}
		Minimum		(mm {in})	6 {0.24}
	Brush spring force	Standard		(N {kgf, lbf})	3.43 {0.35, 0.77}
		Minimum		(N {kgf, lbf})	1.03 {0.105, 0.231}
	Standard voltage (V)	Ignition switch ON	Terminal	B	B–
				P	Below 1
				D	Approx. 0
		Idle [20 °C {68 °F}]	Terminal	B	13—15
				P	Approx. 3—8
				D	*
	Generated current (Reference) (A)	Engine speed (rpm)	1000	Terminal B current	Approx. 0—60 (must not be 0)
			2000	Terminal B current	Approx. 0—68 (must not be 0)
IGNITION SYSTEM					
Ignition coil	Resistance [20 °C {68 °F}]	Secondary coil		(kΩ)	8.24—12.36

Item				Engine	
				BP	
				MTX	ATX
High-tension lead	Resistance (kΩ)		No.1 lead	4—11	
			No.2 lead	3—8	
			No.3 lead	2—6	
			No.4 lead	1—5	
Spark plug	Type	NGK		BKR5E-11*6, BKR6E-11	
		DENSO		K16PR-U11*6, K20PR-U11	
		CHAMPION		RC10YC4*6, RC8YC4	
	Plug gap (mm {in})			1.0—1.1 {0.040—0.043}	
	Resistance (kΩ) [20 °C {68 °F}]	NGK		3.0—7.5	
		DENSO			
		CHAMPION		5—15	
	Tightening torque (N·m {kgf·m, ft·lbf})			15—22 {1.5—2.3, 11—16}	
STARTING SYSTEM					
Starter	Commutator diameter	Standard	(mm {in})	29.4 {1.16}	
		Minimum	(mm {in})	28.8 {1.14}	
	Brush length	Standard	(mm {in})	12.3 {0.48}	
		Minimum	(mm {in})	7.0 {0.28}	
	Brush spring force	Standard	(N {kgf, lbf})	15.05—20.35 {1.534—2.076, 3.375—4.567}	
		Minimum	(N {kgf, lbf})	5.9 {0.60, 1.32}	
	Pinion gap (mm {in})			0.5—2.0 {0.020—0.078}	
	No load test	Voltage	(V)	11	
		Current	(A)	Below 90	

*1 : Excludes temporary idle speed drop just after the loads (E/L, A/C, P/S) are turned on.
*2 : Headlight, fan switch (above 1st) and cooling fan are turned on.
*3 : A/C switch and fan switch are tuned on.
*4 : Steering wheel fully turned.
*5 : Dark current is the constant flow of current present (for the audio unit, clock, PCM, etc.) when the ignition switch is off and with the ignition key removed.
*6 : Standard plug.
* : Turn the following electrical loads on and verify that the voltage reading increases.
- Headlights
- Blower motor
- Rear window defroster

01–60 SERVICE TOOLS

01 ENGINE SST

X5U160W01

49 9200 020A Belt tension gauge T9200020A	49 D011 102 Crankshaft lock tool TD011102X	49 T012 0A0A Tappet holder set TT0120A0A
49 W033 105 Oil seal installer TW033105X	49 G030 795 Oil seal installer TG030795X	49 G030 797 Handle (Part of 49 G030 795) TG030797X
49 T028 302 Dust boot installer TT028302X	49 G014 001 Oil filter wrench TG014001X	49 B014 001 Oil seal installer TB014001X
49 0187 280 Oil pressure gauge T0187280X	49 9200 145 Radiator cap tester adapter set T9200145X	49 T088 0A0 NGS set TT0880A0X
49 T088 008A Instruction manual TT088008A	49 T088 010F Program card (V5.0) TT088010F	49 L018 901 Injection checker TL018901X
49 N013 1A0 Fuel pressure gauge set TN0131A0X	49 H018 001 Knock sensor wrench TH018001X	—

SUSPENSION

02
SECTION

02

02–10 GENERAL PROCEDURES

PRECAUTION (SUSPENSION)

XSU210W01

Wheels and tires removal/installation

- The removal and installation procedures for the wheels and tires are not mentioned in this section. When a wheel is removed, tighten it to **89—117 N·m {9.0—12.0 kgf·m, 66—86 ft·lbf}**.

Suspension links removal/installation

- Tighten any part of the suspension that uses rubber bushings only after the vehicle has been lowered and unloaded.

  Note
  - Unloaded ... Fuel tank full; engine coolant and engine oil at specified levels; spare tire, jack, and tools in designated position.

Brake pipe flare nuts tightening

- Tighten the brake pipe flare nut by using the **SST** (49 0259 770B). Be sure to modify the brake pipe flare nut tightening torque to allow for use of a torque wrench-**SST** combination. (Refer to 00–00 FUNDAMENTAL PROCEDURES, Torque Formulas.)

Brake lines disconnection/connection

- If any brake line has been disconnected anytime during the procedure, add brake fluid, bleed the brakes and inspect for leakage after the procedure has been completed.

Power steering components removal/installation

- If any power steering fluid line has been disconnected anytime during the procedure add ATF MIII or equivalent (e.g. Dexron®II), bleed the fluid lines, and inspect for leakage after the procedure has been completed.

02–11 WHEEL ALIGNMENT

WHEEL ALIGNMENT PREINSPECTION

1. Inspect the tire inflations, and adjust to the recommended pressure as necessary.
2. Inspect the front wheel bearing play and correct as necessary.
3. Inspect the wheel and tire runouts.
4. Inspect the ball joints and steering linkage for excessive looseness.
5. The vehicle must be on level ground and carry no luggage or passengers.
6. Measure the height from the center of the wheel to the fender brim. The difference between left and right measurement must not exceed **10 mm {0.39 in}**.

X5U211W01

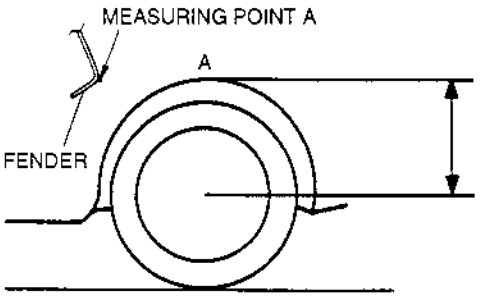

X5U211WA0

FRONT WHEEL ALIGNMENT

X5U211W02

Specifications

Item			Specifications (Unloaded*1*2)
Total toe-in		(mm {in})	3 ± 4 {0.12 ± 0.15}
		(Degree)	0°18' ± 24'
Maximum steering angle		Inner	38° ± 3°
		Outer	33° ± 3°
Steering axis inclination (reference value)			11°38'
Camber angle*3	Height from center of wheel to front fender brim (mm {in})	327—336 {12.9—13.2}	–0°32' ± 1°
		337—346 {13.3—13.6}	–0°12' ± 1°
		347—356 {13.7—14.0}	0°06' ± 1°
		357—366 {14.1—14.4}	0°23' ± 1°
		367—376 {14.1—14.8}	0°38' ± 1°
Caster angle*3	Height from center of wheel to rear fender brim (mm {in})	346—355 {13.7—13.9}	6°17' ± 1°
		356—365 {14.0—14.3}	6°03' ± 1°
		366—375 {14.4—14.7}	5°48' ± 1°
		376—385 {14.8—15.1}	5°34' ± 1°
		386—395 {15.2—15.5}	5°20' ± 1°

*1 : Fuel tank full; engine coolant and engine oil at specified levels; spare tire, jack, and tool in designated positions
*2 : Adjust to the median when carrying out wheel alignment
*3 : Difference between left and right must not exceed 1.5°

Maximum Steering Angle Adjustment

1. Remove the steering gear boot clamp.
2. Loosen the tie rod locknut.
3. Turn the tie rod to provide the correct maximum steering angle.
4. After adjustment, tighten the locknut to the specified torque.

   Tightening torque
   35—50 N·m {3.5—5.1 kgf·m, 26—36 ft·lbf}

5. Adjust the toe-in.
6. Verify that the boot is not twisted, and install the boot clamp.

Caster Adjustment

Caution
- **Adjust the caster before adjusting the camber.**

1. Loosen the front and/or rear cam nuts.

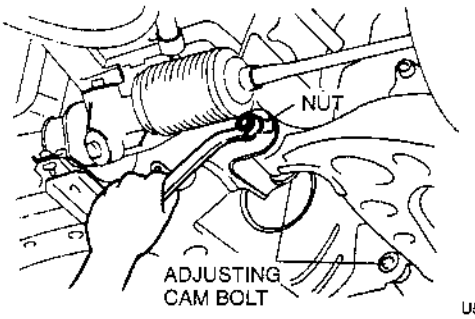

2. Turn the front and/or rear adjusting cam bolts to provide the correct caster angle.

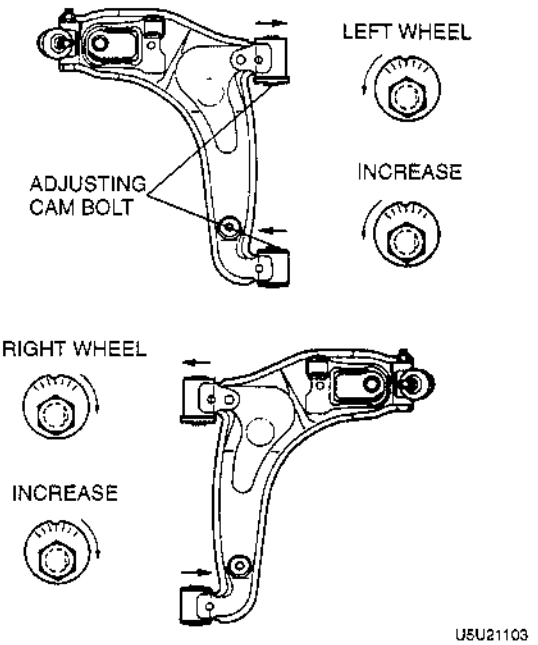

Caster	Left wheel		Right wheel	
	Front cam	Rear cam	Front cam	Rear cam
Increase	Counter-clockwise	Counter-clockwise	Clock-wise	Clock-wise
Decrease	Clock-wise	Clock-wise	Counter-clockwise	Counter-clockwise

Note
- Turning the front cam one graduation on the scale changes the caster angle about **25'** and the camber about **29'**. Turning the rear cam one graduation changes the caster angle about **25'** and the camber about **2'**.

3. Adjust the camber and the toe-in.

Camber Adjustment

Caution
- **Adjust the camber after adjusting the caster.**

1. Loosen the front and rear cam nuts.
2. Turn the front and rear adjusting cam bolts the same amount in the opposite direction to provide the correct camber angle.

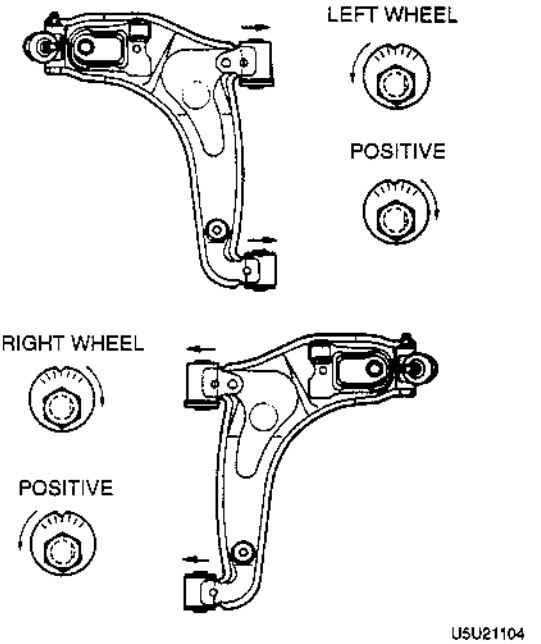

Camber	Left wheel		Right wheel	
	Front cam	Rear cam	Front cam	Rear cam
Positive	Counter-clockwise	Clock-wise	Clock-wise	Counter-clockwise
Negative	Clock-wise	Counter-clockwise	Counter-clockwise	Clock-wise

Note

- Turning the front cam one graduation changes the camber about **29'** and the caster about **25'**. Turning the rear cam one graduation changes the camber about **2'**and the caster about **25'**.

Note

- If the cam cannot be turned far enough to make the adjustment, begin adjustment of the caster again using the other cam.

3. Tighten the nuts.

Tightening torque
94—112 N·m {9.5—11.5 kgf·m, 69—83 ft·lbf}

4. Adjust the toe-in.

Total Toe-in Adjustment

1. Remove the steering gear boot clamp.
2. Loosen the left and right tie rod locknuts, and turn the tie rods by the same amount.
3. Loosen the left and right tie rod locknuts and turn the tie rods equally. Both tie rods are right threaded, so turning the right tie rod toward the front of the vehicle and the left toward the rear increases toe-in.

Note

- Turning both tie rods one complete turn changes toe-in by about **7 mm {0.28 in}**.

4. Tighten the tie rod locknuts to the specified torque.

Tightening torque
35—50 N·m {3.5—5.1 kgf·m, 26—36 ft·lbf}

5. Verify that the boot is not twisted, and install the boot clamp.

REAR WHEEL ALIGNMENT

X5U211W03

Specifications

Item			Specifications (Unloaded*1*2)
Total toe-in		(mm {in})	3 ± 4 {0.12 ± 0.15}
		(Degree)	0°18' ± 24'
Camber angle*3	Height from center of wheel to rear fender brim (mm {in})	346—355 {13.7—13.9}	−1°14' ± 1°
		356—365 {14.0—14.3}	−0°59' ± 1°
		366—375 {14.4—14.7}	−0°47' ± 1°
		376—385 {14.8—15.1}	−0°38' ± 1°
		386—395 {15.2—15.5}	−0°32' ± 1°
Thrust angle			0° ± 48'

*1 : Fuel tank full; engine coolant and engine oil at specified levels; spare tire, jack, and tool in designated positions

*2 : Adjust to the median when carrying out wheel alignment

*3 : Difference between left and right must not exceed 1.5°

Total Toe-in Adjustment

Caution
- **Adjust the toe-in before adjusting the camber.**

1. Loosen the front and/or rear cam nuts.
2. Turn the front and/or rear adjusting cam bolts to provide the correct toe-in.

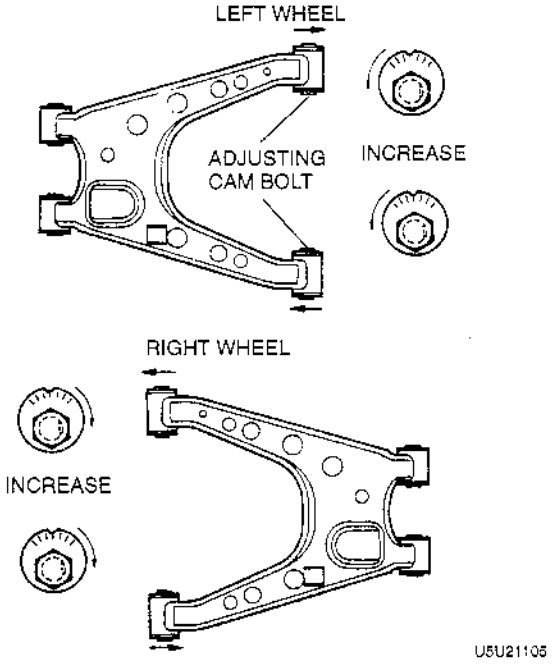

Toe-in	Left wheel		Right wheel	
	Front cam	Rear cam	Front cam	Rear cam
Increase	Counter-clockwise	Counter-clockwise	Clock-wise	Clock-wise
Decrease	Clock-wise	Clock-wise	Counter-clockwise	Counter-clockwise

Note
- Turning the front cam one graduation changes the toe-in about **2.3 mm {0.11 in}** and the camber about **13'**. Turning the rear cam one graduation changes the toe-in about **2.3 mm {0.11 in}** and the camber about **8'**.

3. Adjust the camber.

Camber Adjustment

Caution
- **Adjust the camber after adjusting the toe-in.**

1. Loosen the front and rear cam nuts.
2. Turn the front and rear adjusting cam bolts the same amount in the opposite direction to provide the correct camber angle.

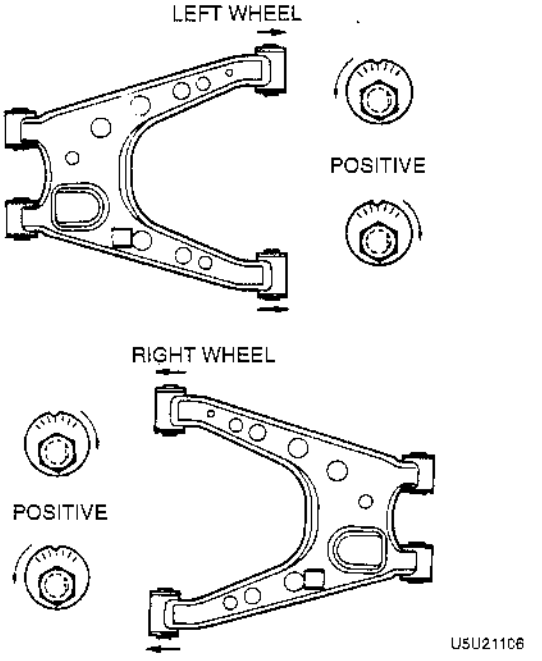

Camber	Left wheel		Right wheel	
	Front cam	Rear cam	Front cam	Rear cam
Positive	Counter-clockwise	Clock-wise	Clock-wise	Counter-clockwise
Negative	Clock-wise	Counter-clockwise	Counter-clockwise	Clock-wise

Note
- Turning the front cam one graduation changes the camber about **13'** and the toe-in about **2.3 mm {0.11 in}**. Turning the rear cam one graduation changes the camber about **8'** and the toe-in about **2.3 mm {0.11 in}**.
- If the cam cannot be turned far enough to make the adjustment, begin adjustment of the toe-in again using the other cam.

3. Tighten the nuts.

Tightening torque
73—95 N·m {7.4—9.7 kgf·m, 54—70 ft·lbf}

02–13 FRONT SUSPENSION

02

FRONT SHOCK ABSORBER AND COIL SPRING REMOVAL/INSTALLATION

X5U213W01

Caution

- **Performing the following procedures without first removing the ABS wheel-speed sensor may possibly cause an open circuit in the harness if it is pulled by mistake. Before performing the following procedures, remove the ABS wheel-speed sensor (axle side) and fix it to an appropriate place where the sensor will not be pulled by mistake while servicing the vehicle.**

1. Remove in the order indicated in the table.
2. Install in the reverse order of removal.
3. Adjust the front wheel aligment.

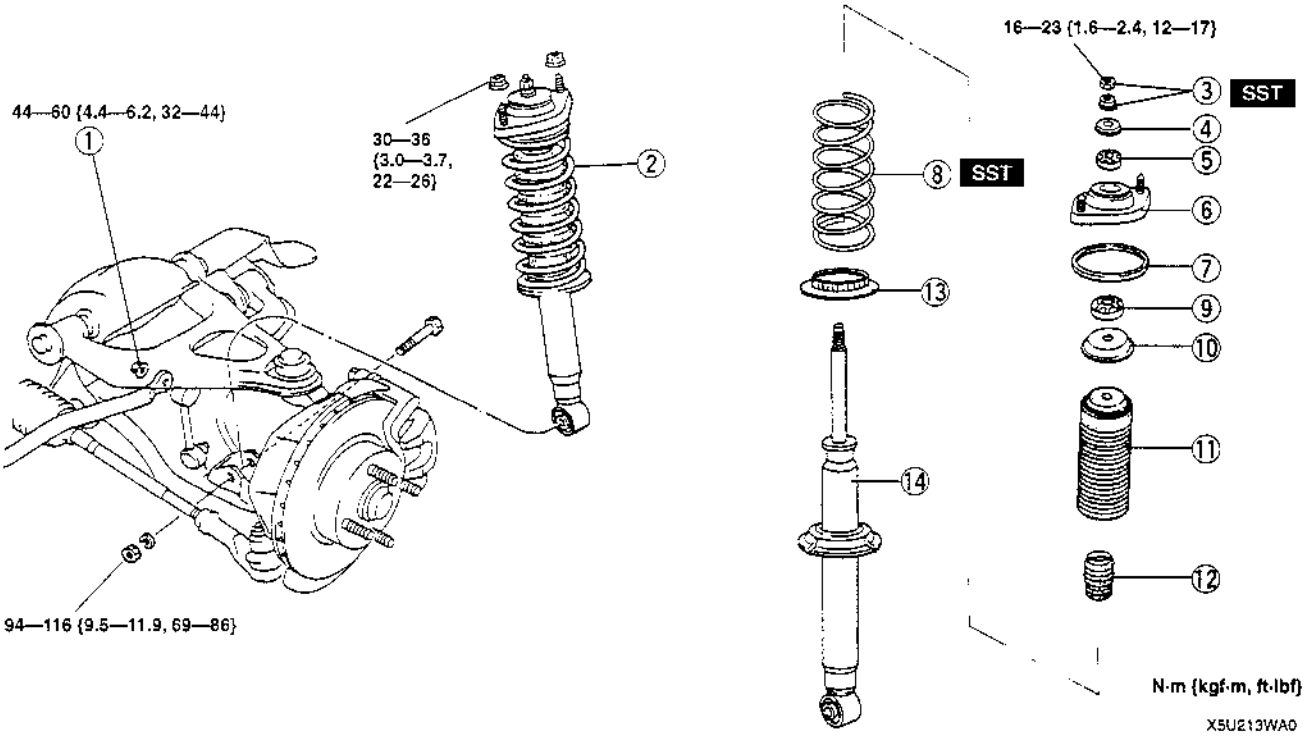

1	Stabilizer control link nut
2	Front shock absorber and coil spring ☞ Removal Note ☞ Installation Note
3	Piston rod nut ☞ Removal Note
4	Retainer
5	Rubber bushing
6	Upper spring seat
7	Upper spring seat rubber
8	Coil spring ☞ Installation Note
9	Rubber bushing
10	Stopper casing
11	Dust boot
12	Bound stopper ☞ Installation Note
13	Lower spring seat rubber
14	Front shock absorber

Front Shock Absorber and Coil Spring Removal Note

1. Disconnect the lower arm ball joint. (Refer to FRONT LOWER ARM REMOVAL/INSTALLATION, Lower Arm Ball Joint Removal Note.)
2. Loosen the lower arm bolts.

Caution

- **Do not lower the arms excessively, which may damage the brake hose.**

3. Lower the lower arm to remove the shock absorber.

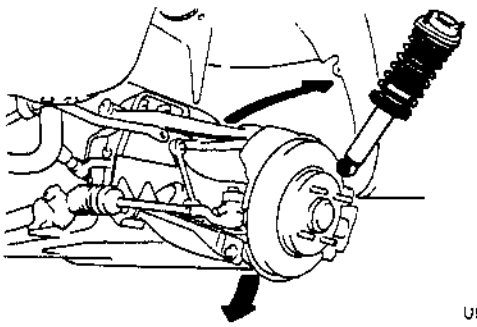

U5U21302

Piston Rod Nut Removal Note

Warning

- **Removing the piston rod nut is dangerous. The shock absorber and spring could fly off under tremendous pressure and cause serious injury or death. Secure the shock absorber in the SSTs before removing the coil spring nut.**

1. Loosen the piston rod nut several turns, but do not remove the nut.
2. Assemble the **SSTs**.
3. Secure the shock absorber in the **SSTs**.
4. Compress the coil spring by using the **SSTs** and remove the nut.

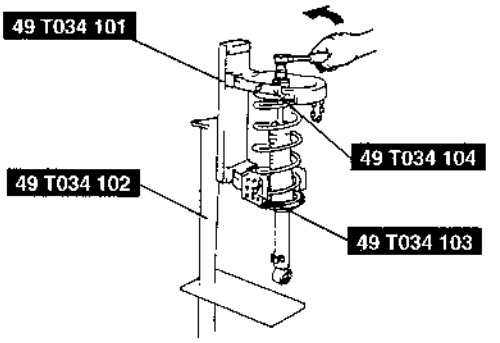

WHEN USING ENGINE STAND

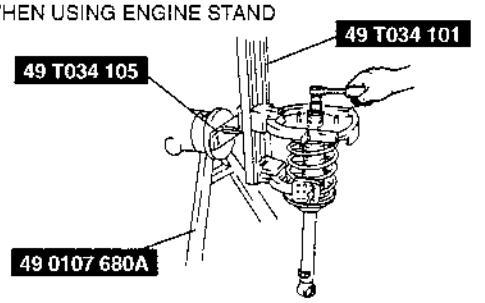

U5U21304

Bound Stopper Installation Note

1. Install the bound stopper to the piston rod as shown.
2. Verify that the lower end of the bound stopper does not contact the cylinder.

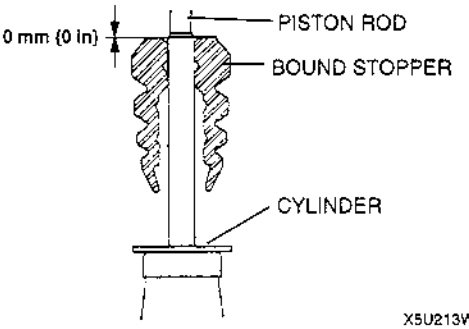

X5U213WA8

Coil Spring Installation Note

1. Temporarily assemble the upper spring seat, upper spring seat rubber, and coil spring to the shock absorber as shown.
2. Mark the upper spring seat, shock absorber, and coil spring for proper reassembly.

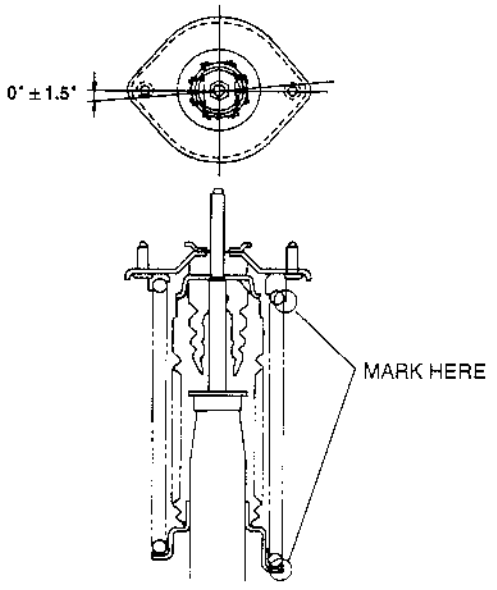

X5U213WA1

3. Align the marks of the upper spring seat and coil spring. Protect the upper spring seat and the coil spring with a piece of cloth, then assemble the **SSTs**.
4. Use the **SSTs** to compress the spring.

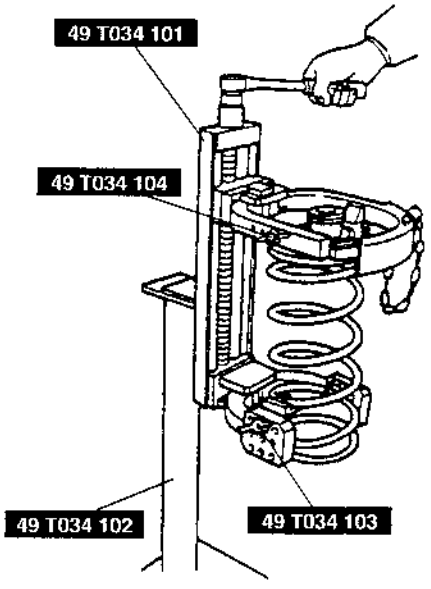

U5U21309

5. Install the shock absorber, making sure that the marks on the shock absorber and coil spring are aligned.
6. Tighten the nut several turns.
7. Remove the **SSTs**.
8. Secure the shock absorber in a vise.

Caution

- **Using an air tool will damage the piston rod thread. Do not use an air tool.**

9. Apply an antirust penetrating oil lubricant to the piston rod thread and tighten the lower piston rod nut so that the exposed thread of the piston rod is **15.7—17.7 mm {0.62—0.69 in}**.
10. Tighten the upper nut to the specified torque.

Tightening torque
16—23 N·m {1.6—2.4 kgf·m, 12—17 ft·lbf}

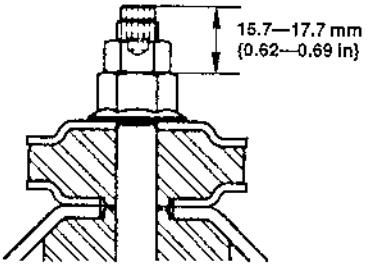

X5U213WA7

Front Shock Absorber and Coil Spring Installation Note

- Install the front shock absorber and coil spring so that the ABS wheel-speed sensor bracket of the shock absorber faces the rear of the vehicle.

FRONT SHOCK ABSORBER INSPECTION

X5U213W02

Inspect the following and replace as necessary.
1. Inspect for damage and oil leakage.
2. Inspect the rubber bushing for deterioration and wear.
3. Compress and extend the shock piston at least 3 times. Verify that the operational force does not change and that there is no unusual noise.
   (1) Compress the shock absorber piston and release it.
   (2) Verify that the piston extends fully at a normal speed.

FRONT SHOCK ABSORBER DISPOSAL

X5U213W03

Warning
- **The gas in the shock absorber is pressurized, and could spray metal chips into the eyes and face when drilling. Whenever drilling into a shock absorber, wear protective eye wear.**

1. Clamp a shock absorber flat or with piston downwards.
2. Drill a **2—3 mm {0.08—0.12 in}** hole at a point **20—30 mm {0.79—1.18 in}** from the bottom of the tube so that the gas can escape.

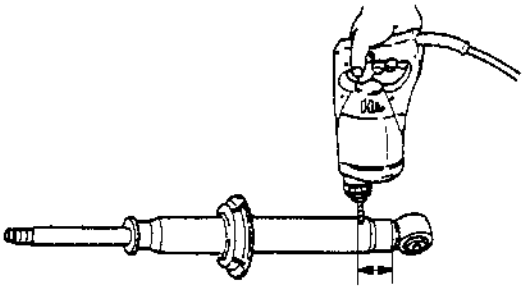

X5U213WC0

3. Turn the hole downwards.
4. The oil can be collected by moving the piston rod several times up and down and cutting the tube at the end.
5. Dispose of the waste oil according to the waste disposal law.

Note
- Shock absorber gas is nitrogen gas.
- Shock absorber oil is mineral oil.

FRONT LOWER ARM REMOVAL/INSTALLATION

X5U213W04

Caution

- **Performing the following procedures without first removing the ABS wheel-speed sensor may possibly cause an open circuit in the harness if it is pulled by mistake. Before performing the following procedures, remove the ABS wheel-speed sensor (axle side) and fix it to an appropriate place where the sensor will not be pulled by mistake while servicing the vehicle.**

1. Remove in the order indicated in the table.
2. Install in the reverse order of removal.
3. Adjust the front wheel alignment.

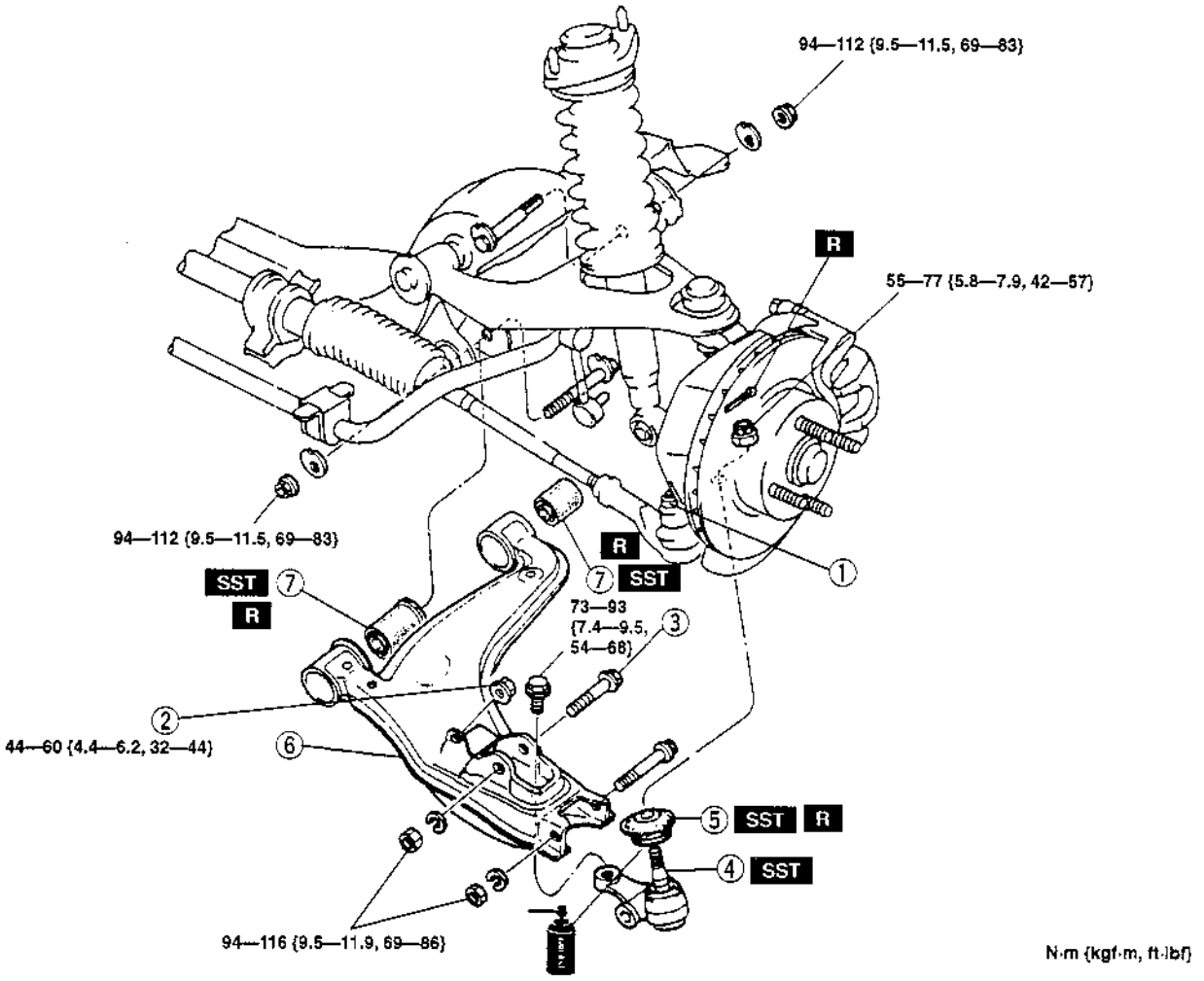

X5U213WA2

1	Tie-rod end ball joint ☞ 06–10 STEERING GEAR AND LINKAGE REMOVAL/INSTALLATION, Tie-rod End Ball Joint Removal Note
2	Stabilizer control link nut
3	Shock absorber bolt
4	Lower arm ball joint ☞ Removal Note

5	Dust boot ☞ Removal Note ☞ Installation Note
6	Lower arm
7	Lower arm bushing (front and rear) ☞ Removal Note ☞ Installation Note

Lower Arm Ball Joint Removal Note

- Separate the ball joint from the knuckle by using the **SST**.

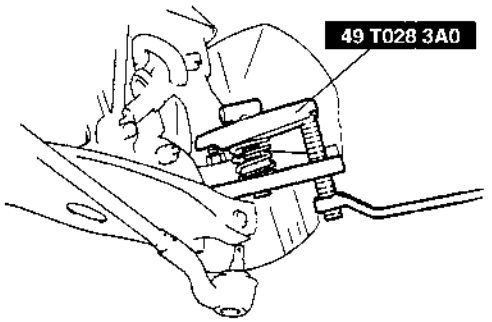

U5U21312

Dust Boot Removal Note

- Carefully remove the dust boot by using a chisel.

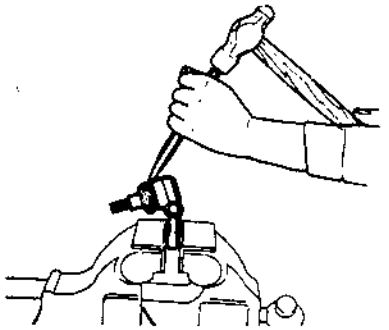

U5U21313

Lower Arm Bushing (Front and Rear) Removal Note

- Press the lower arm bushing out by using the **SSTs** and a socket as shown.

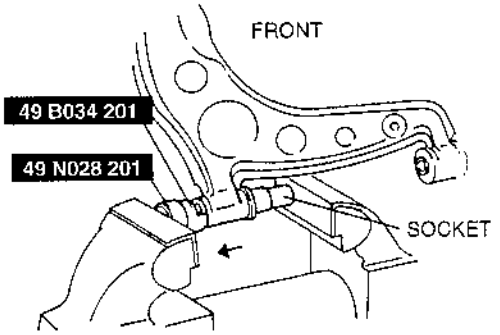

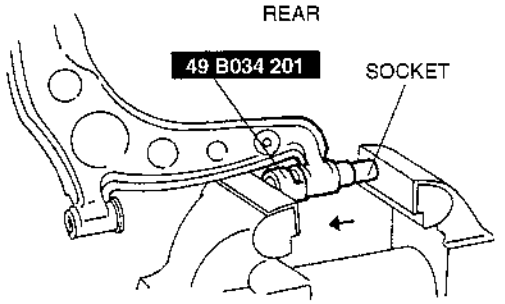

U5U21314

Lower Arm Bushing (Front and Rear) Installation Note

1. Apply soapy water to the lower arm bushing.
2. Press the bushing in by using the **SST** and socket in the direction of the arrow.

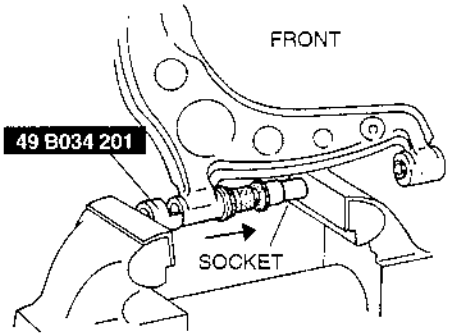

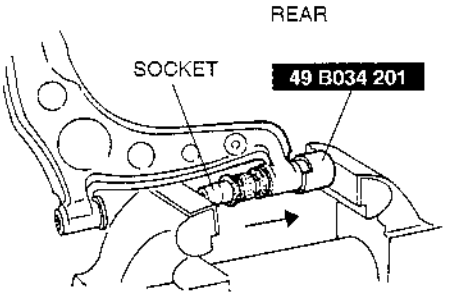

U5U21316

Dust Boot Installation Note

1. Wipe away the grease on the ball joint.
2. Liberally coat the inside of the new dust boot with grease.
3. Press the dust boot onto the ball joint by using the **SST**.
4. Wipe away any grease that has been expelled from the dust boot.

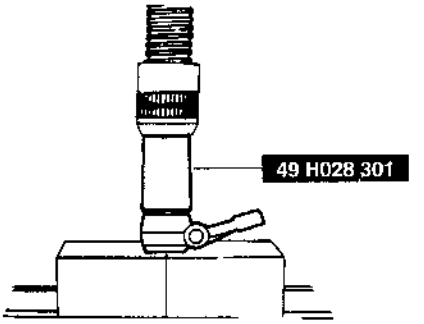

U5U21315

FRONT LOWER ARM INSPECTION

U5U213AH

1. Shake the ball joint stud 5 times.
2. Connect the **SST** to the ball stud, and measure the rotation torque by using a pull scale.

Rotation torque
0.35—1.8 N·m
{3.5—19.5 kgf·cm, 3.1—16.9 in·lbf}
Pull scale reading
3.5—18.2 N {0.35—1.95 kgf, 0.77—4.29 lbf}

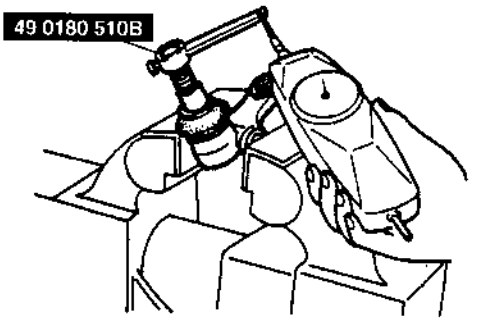

U5U21317

FRONT UPPER ARM REMOVAL/INSTALLATION

X5U213W05

Caution
- **Performing the following procedures without first removing the ABS wheel-speed sensor may possibly cause an open circuit in the harness if it is pulled by mistake. Before performing the following procedures, remove the ABS wheel-speed sensor (axle side) and fix it to an appropriate place where the sensor will not be pulled by mistake while servicing the vehicle.**

1. Remove in the order indicated in the table.
2. Install in the reverse order of removal.
3. Adjust the front wheel alignment.

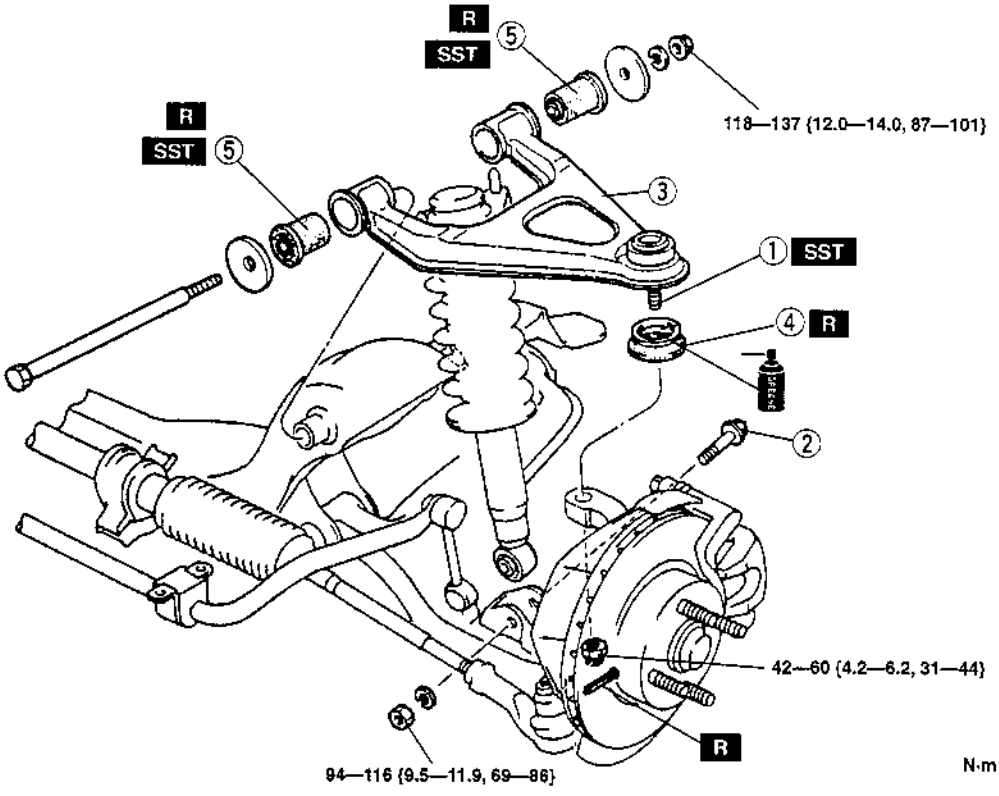

X5U213WA3

1	Upper arm ball joint ☞ Removal Note
2	Shock absorber bolt
3	Upper arm

4	Dust boot ☞ Removal Note ☞ Installation Note
5	Upper arm bushing (front and rear) ☞ Removal Note ☞ Installation Note

Upper Arm Ball Joint Removal Note

- Separate the upper arm ball joint from the knuckle by using the **SST**.

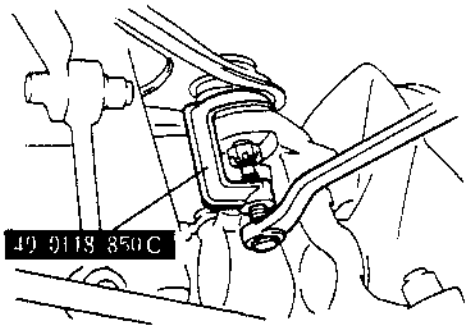

X5U213WA4

Dust Boot Removal Note

- Carefully remove the dust boot by using a chisel.

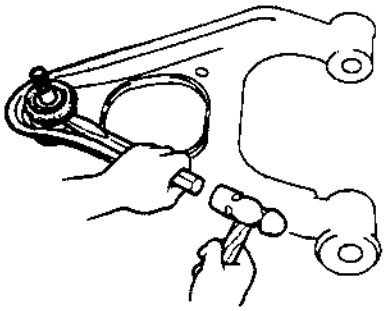

U5U21320

Upper Arm Bushing (Front and Rear) Removal Note

- Press the upper arm bushing out by using the **SST** and a socket as shown.

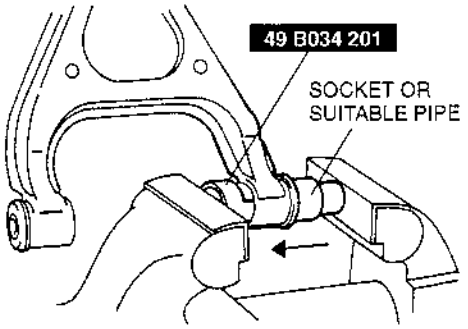

U5U21321

Upper Arm Bushing (Front and Rear) Installation Note

1. Apply soapy water to the upper arm bushing.
2. Press the bushing in by using the **SST** and a socket in the direction of the arrow.

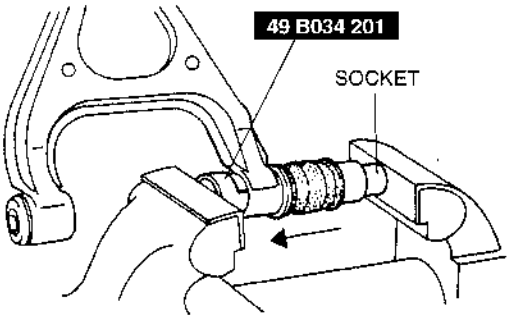

U5U21323

Dust Boot Installation Note

1. Liberally coat the inside of the new dust boot with grease.
2. Press the dust boot on by using a **30 mm {1 1/8 in}** socket until the dust boot contacts the seat.

   Caution

   - **Install the dust boot squarely and do not press excessively. The inner metal ring will be deformed if not done correctly.**

3. Verify that the clearance between the boot and the seat is less than **1 mm {0.04 in}**.

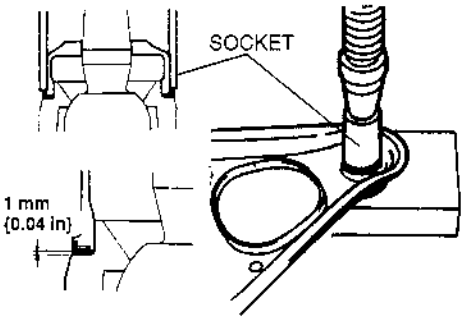

U5U21322

FRONT UPPER ARM INSPECTION

U5U213AJ

1. Shake the ball joint stud 5 times.
2. Connect the **SST** to the ball stud, and measure the rotation torque by using a pull scale.

Rotation torque
0.3—2.2 N·m
{2.8—23.4 kgf·cm, 2.5—20.2 in·lbf}
Pull scale reading
3.0—22.1 N {0.3—2.3 kgf, 0.63—5.07 lbf}

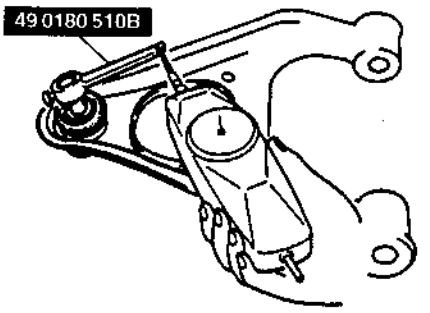

U5U21324

FRONT STABILIZER REMOVAL/INSTALLATION

X5U213W06

Caution
- **Performing the following procedures without first removing the ABS wheel-speed sensor may possibly cause an open circuit in the harness if it is pulled by mistake. Before performing the following procedures, remove the ABS wheel-speed sensor (axle side) and fix it to an appropriate place where the sensor will not be pulled by mistake while servicing the vehicle.**

1. Remove in the order indicated in the table.
2. Install in the reverse order of removal.

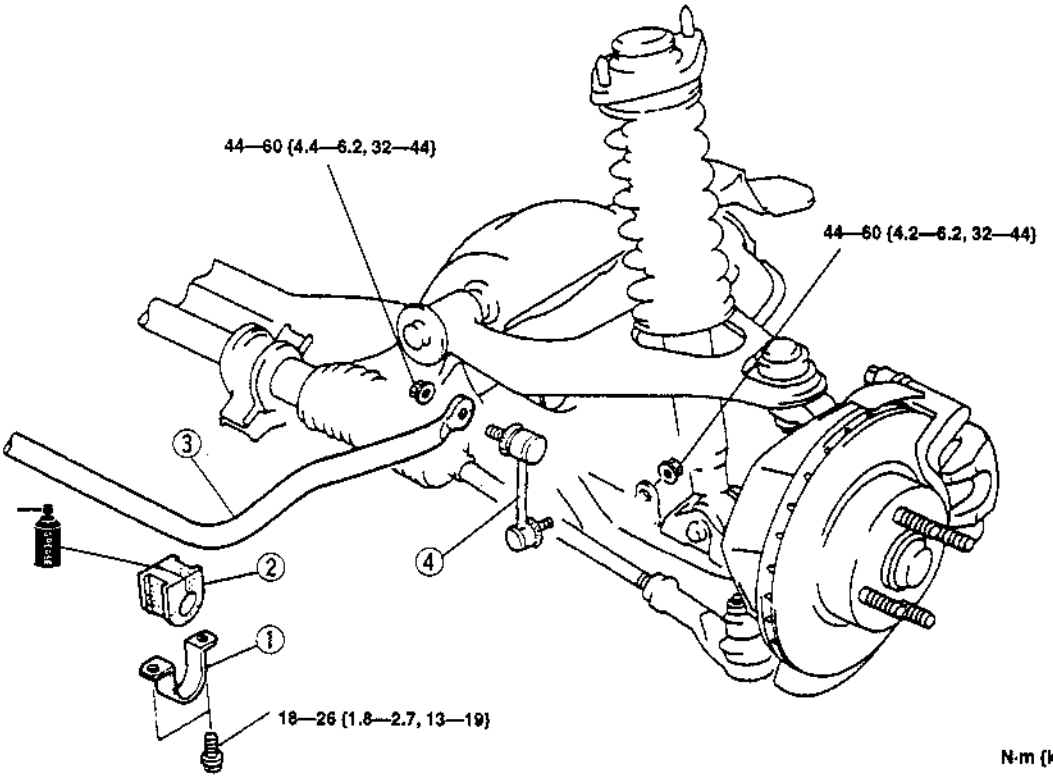

N·m {kgf·m, ft·lbf}

X5U213WA5

1	Stabilizer bracket
2	Stabilizer bushing ☞ Installation Note

3	Stabilizer bar
4	Stabilizer control link

Stabilizer Bushing Installation Note

- Align the bushing with the positioning bushing on the stabilizer.

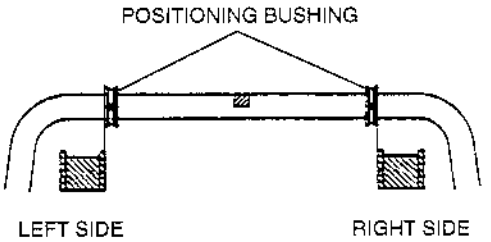

X5U213WC1

STABILIZER CONTROL LINK INSPECTION

1. Remove the stabilizer control link from the vehicle.
2. Inspect for bending and damage.
3. Measure the ball joint starting torque.
   (1) Rock the ball joint stud side to side 10 times.
   (2) Rotate the ball joint stud 10 times.
   (3) Measure the starting torque by using a suitable Allen socket and a torque wrench.

Starting torque
0.14—2.7 N·m
{1.4—27 kgf·cm, 1.3—23.4 in·lbf}

X5U213W08

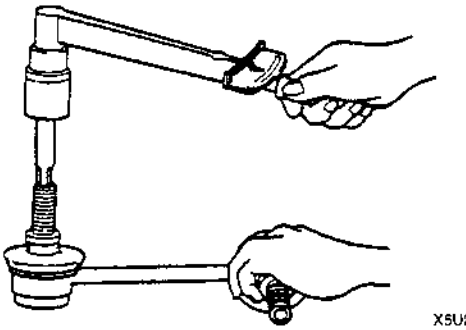

X5U213WB0

FRONT CROSSMEMBER REMOVAL/INSTALLATION

X5U213W07

Caution

- **Performing the following procedures without first removing the ABS wheel-speed sensor may possibly cause an open circuit in the harness if it is pulled by mistake. Before performing the following procedures, remove the ABS wheel-speed sensor (axle side) and fix it to an appropriate place where the sensor will not be pulled by mistake while servicing the vehicle.**

1. Support the engine with a hoist or baby crane.
2. Remove the steering gear and linkage. (Refer to 06–11 or 06–12 STEERING GEAR AND LINKAGE REMOVAL/INSTALLATION.)
3. Remove the steering knuckles. (Refer to 03–11 WHEEL HUB, STEERING KNUCKLE REMOVAL/INSTALLATION.)
4. Remove the front stabilizer. (Refer to 02–11 FRONT STABILIZER REMOVAL/INSTALLATION.)
5. Remove the front lower arms. (Refer to 02–11 FRONT LOWER ARM REMOVAL/INSTALLATION.)
6. Remove the front upper arms. (Refer to 02–11 FRONT UPPER ARM REMOVAL/INSTALLATION.)
7. Remove in the order indicated in the table.
8. Install in the reverse order of removal.
9. Adjust the front wheel alignment.

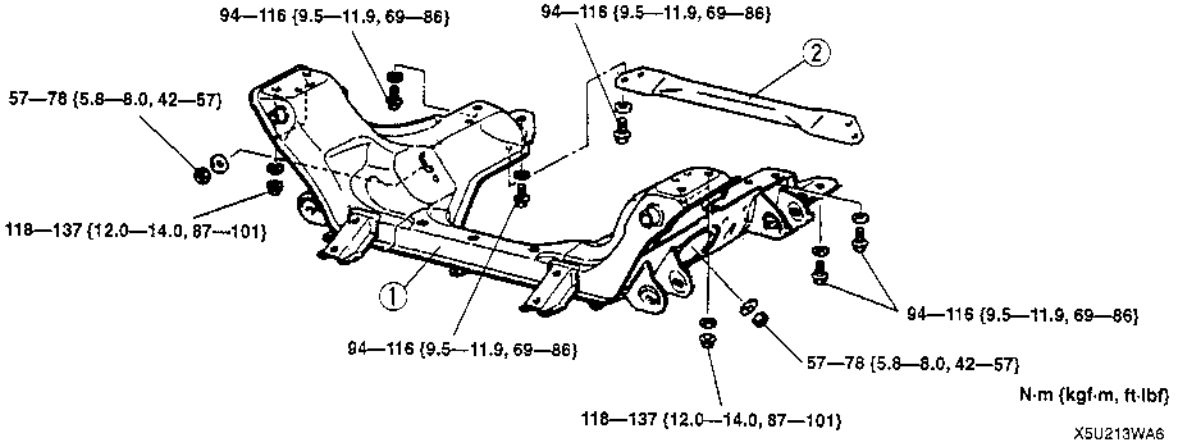

1	Front crossmember

2	Front crossbar

02–14 REAR SUSPENSION

REAR SHOCK ABSORBER AND COIL SPRING REMOVAL/INSTALLATION

X5U214W01

Caution

- **Performing the following procedures without first removing the ABS wheel-speed sensor may possibly cause an open circuit in the harness if it is pulled by mistake. Before performing the following procedures, remove the ABS wheel-speed sensor (axle side) and fix it to an appropriate place where the sensor will not be pulled by mistake while servicing the vehicle.**

1. Remove in the order indicated in the table.
2. Install in the reverse order of removal.
3. Adjust the rear wheel alignment.

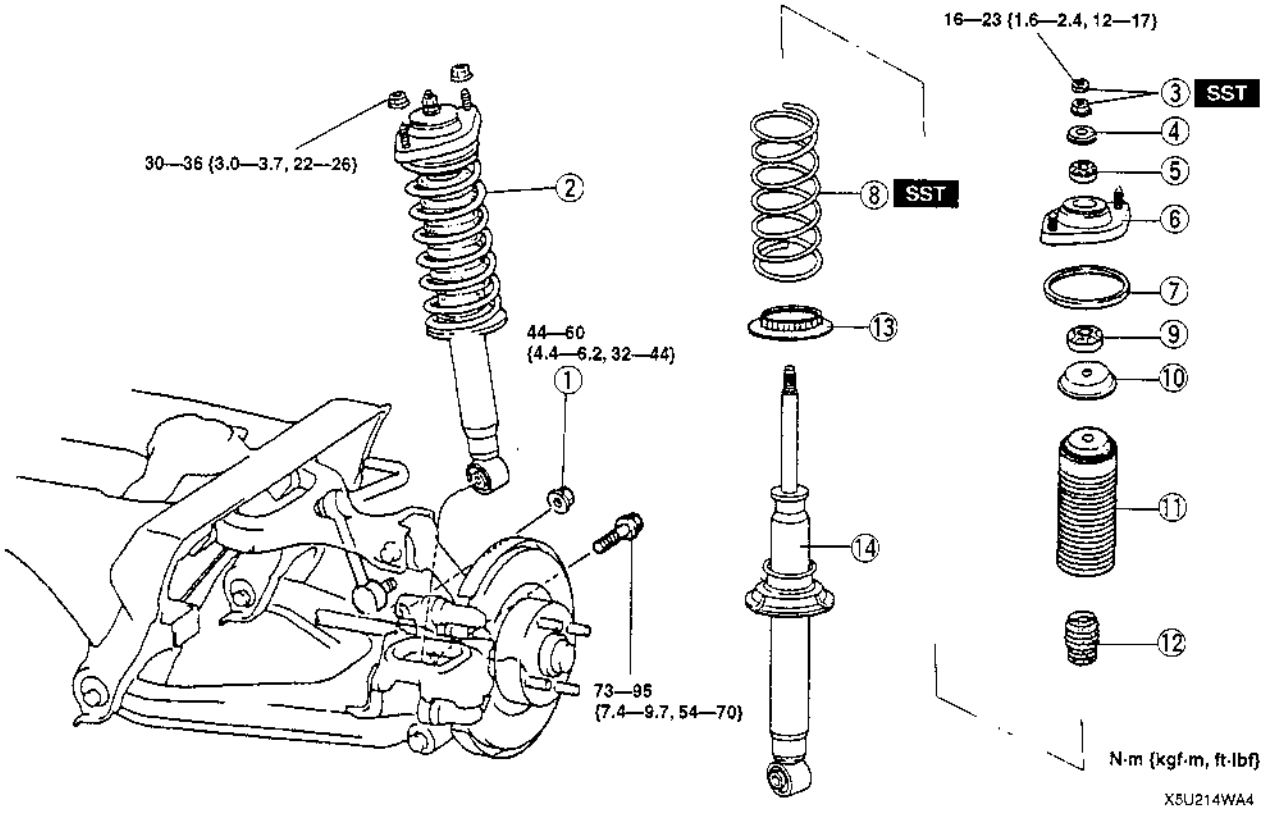

1	Stabilizer control link nut
2	Rear shock absorber and coil spring ☞ Removal Note ☞ Installation Note
3	Piston rod nut ☞ 02–13 FRONT SHOCK ABSORBER AND COIL SPRING REMOVAL/INSTALLATION, Piston Rod Nut Removal Note
4	Retainer
5	Rubber bushing
6	Upper spring seat
7	Upper spring seat rubber
8	Coil spring ☞ 02–13 FRONT SHOCK ABSORBER AND COIL SPRING REMOVAL/INSTALLATION, Coil Spring Installation Note
9	Rubber bushing
10	Stopper casing
11	Dust boot
12	Bump stopper ☞ 02–13 FRONT SHOCK ABSORBER AND COIL SPRING REMOVAL/INSTALLATION, Bump Stopper Installation Note
13	Lower spring seat rubber
14	Rear shock absorber

Rear Shock Absorber and Coil Spring Removal Note

Caution

- **Do not lower the arms excessively, which may damage the brake hose.**

1. Loosen the upper arm and adjusting cam nuts.
2. Lower the upper and lower arms to remove the shock absorber and spring.

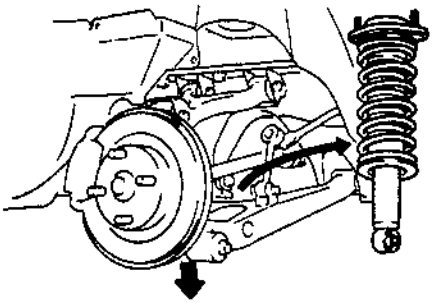

U5U21402

Rear Shock Absorber and Coil Spring Installation Note

- Install the rear shock absorber and coil spring so that the part number label (by Showa) or caution label (by Bilstein) on the shock absorber faces outside of the vehicle.

REAR SHOCK ABSORBER INSPECTION

X5U214W02

- Inspect the rear shock absorber in the same procedure as the front shock absorber. (Refer to 02–13 FRONT SHOCK ABSORBER INSPECTION.)

REAR SHOCK ABSORBER DISPOSAL

X5U214W03

- Dispose the rear shock absorber in the same procedure as the front shock absorber. (Refer to 02–13 FRONT SHOCK ABSORBER DISPOSAL.)

REAR LOWER ARM REMOVAL/INSTALLATION

X5U214W04

Caution

- **Performing the following procedures without first removing the ABS wheel-speed sensor may possibly cause an open circuit in the harness if it is pulled by mistake. Before performing the following procedures, remove the ABS wheel-speed sensor (axle side) and fix it to an appropriate place where the sensor will not be pulled by mistake while servicing the vehicle.**

1. Remove in the order indicated in the table.
2. Install in the reverse order of removal.
3. Adjust the rear wheel alignment.

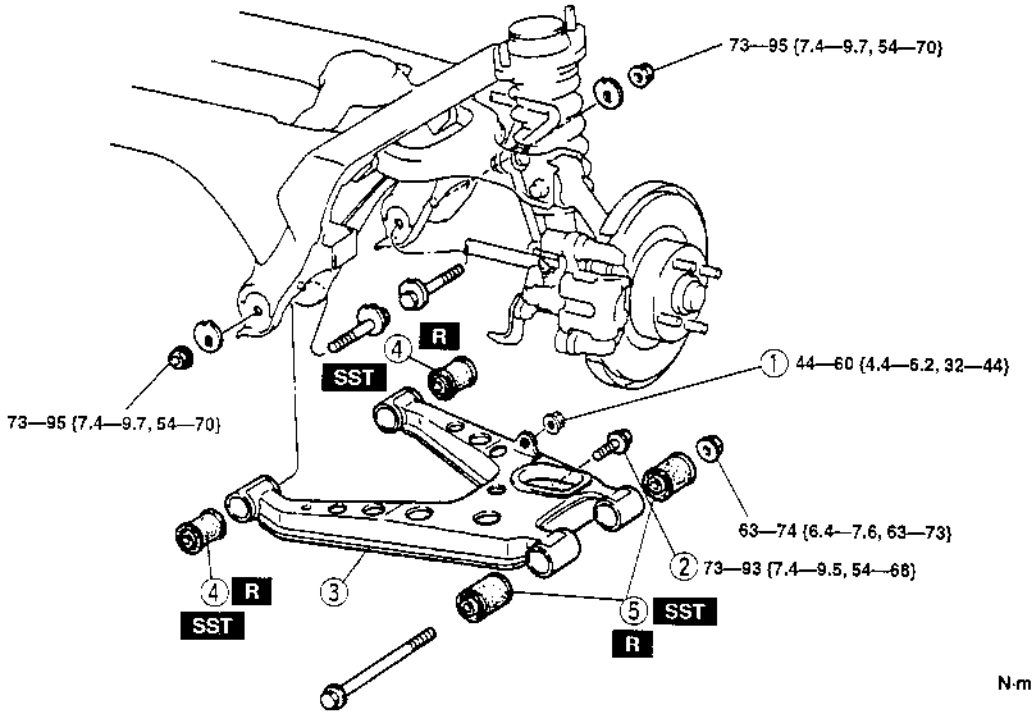

N·m {kgf·m, ft·lbf}

X5U214WA1

1	Stabilizer control link nut
2	Shock absorber bolt
3	Rear lower arm
4	Lower arm bushing (crossmember side) ☞ Removal Note ☞ Installation Note
5	Lower arm bushing (knuckle side) ☞ Removal Note ☞ Installation Note

Lower Arm Bushing (Crossmember Side) Removal Note

- Press the lower arm bushing out by using the **SSTs** and a socket as shown.

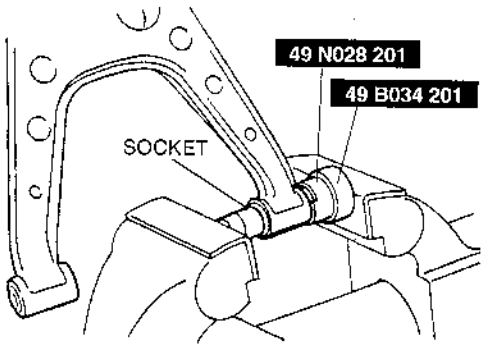

U5U21404

Lower Arm Bushing (Knuckle Side) Removal Note

- Press the lower arm bushing out by using the **SST** and a socket as shown.

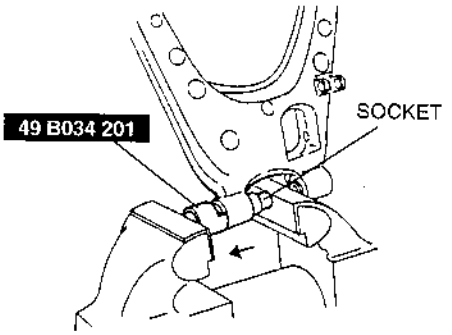

U5U21405

Lower Arm Bushing (Knuckle Side) Installation Note

Caution

- **Install the bushing with a white mark for the front side.**

1. Apply soapy water to the lower arm bushing.
2. Press the bushing in by using the **SST** and a socket in the direction of the arrow.

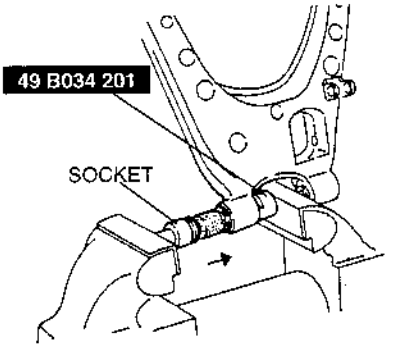

U5U21406

Lower Arm Bushing (Crossmember Side) Installation Note

1. Apply soapy water to the lower arm bushing.
2. Press the bushing in by using the **SST** and a socket in the direction of the arrow.

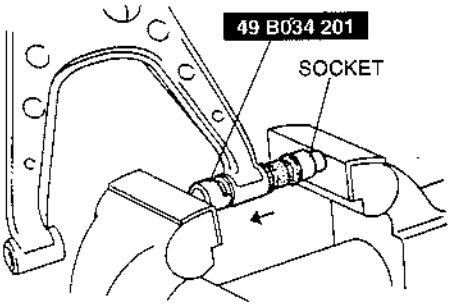

U5U21407

REAR UPPER ARM REMOVAL/INSTALLATION

X5U214W05

Caution

- **Performing the following procedures without first removing the ABS wheel-speed sensor may possibly cause an open circuit in the harness if it is pulled by mistake. Before performing the following procedures, remove the ABS wheel-speed sensor (axle side) and fix it to an appropriate place where the sensor will not be pulled by mistake while servicing the vehicle.**

1. Remove in the order indicated in the table.
2. Install in the reverse order of removal.
3. Adjust the rear wheel alignment.

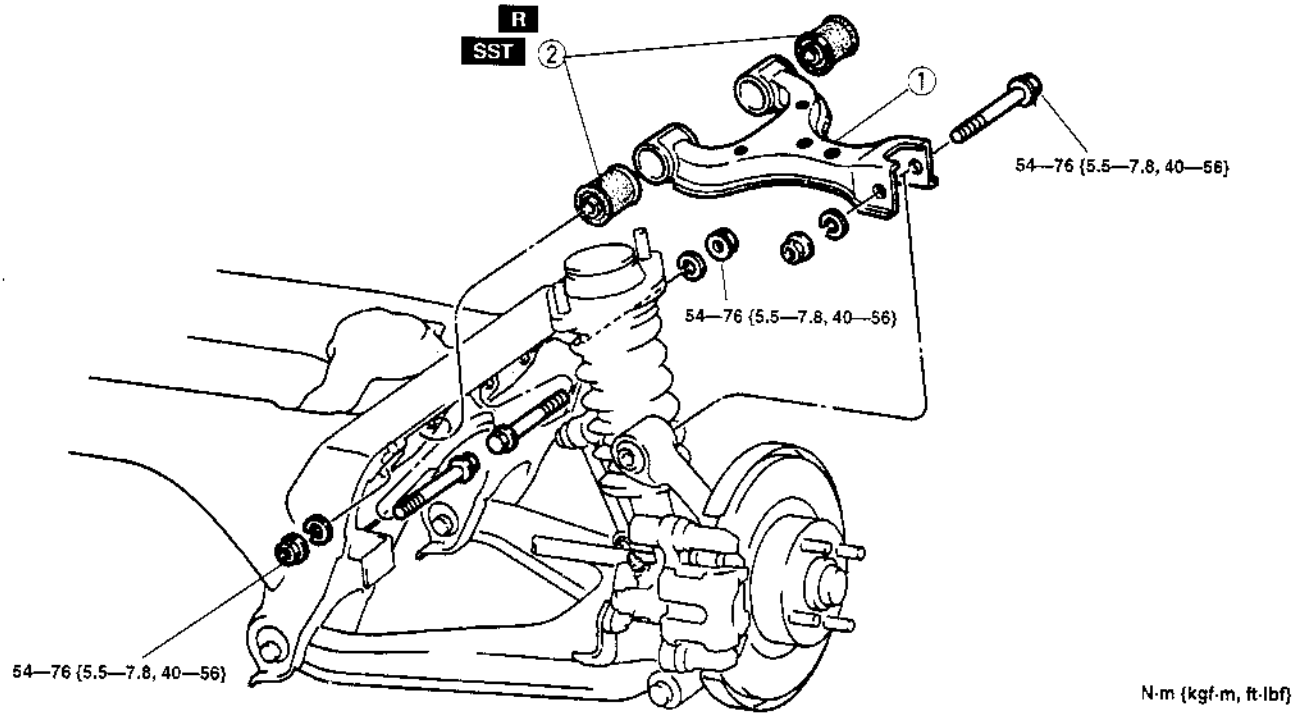

U5U21408

1	Rear upper arm

2	Upper arm bushing ☞ Removal Note ☞ Installation Note

Upper Arm Bushing Removal Note

- Press the upper arm bushing out by using the **SSTs** and a socket as shown.

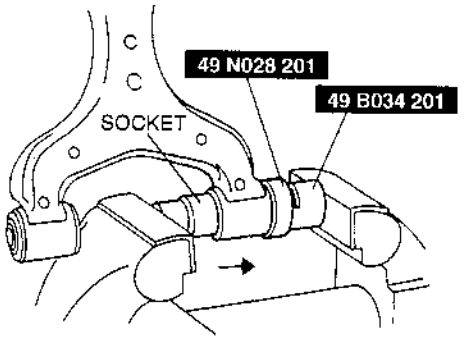

U5U21409

Upper Arm Bushing Installation Note

1. Apply soapy water to the upper arm bushing.
2. Press the bushing in by using the **SST** and a socket in the direction of the arrow.

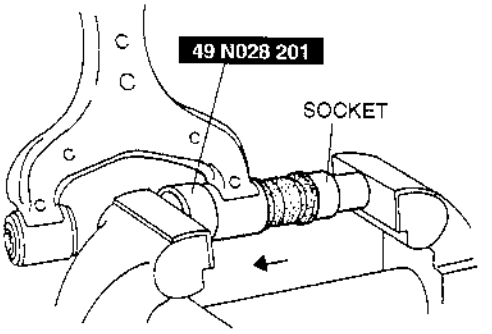

U5U21410

REAR STABILIZER REMOVAL/INSTALLATION

X5U214W06

Caution

- **Performing the following procedures without first removing the ABS wheel-speed sensor may possibly cause an open circuit in the harness if it is pulled by mistake. Before performing the following procedures, remove the ABS wheel-speed sensor (axle side) and fix it to an appropriate place where the sensor will not be pulled by mistake while servicing the vehicle.**

1. Remove in the order indicated in the table.
2. Install in the reverse order of removal.

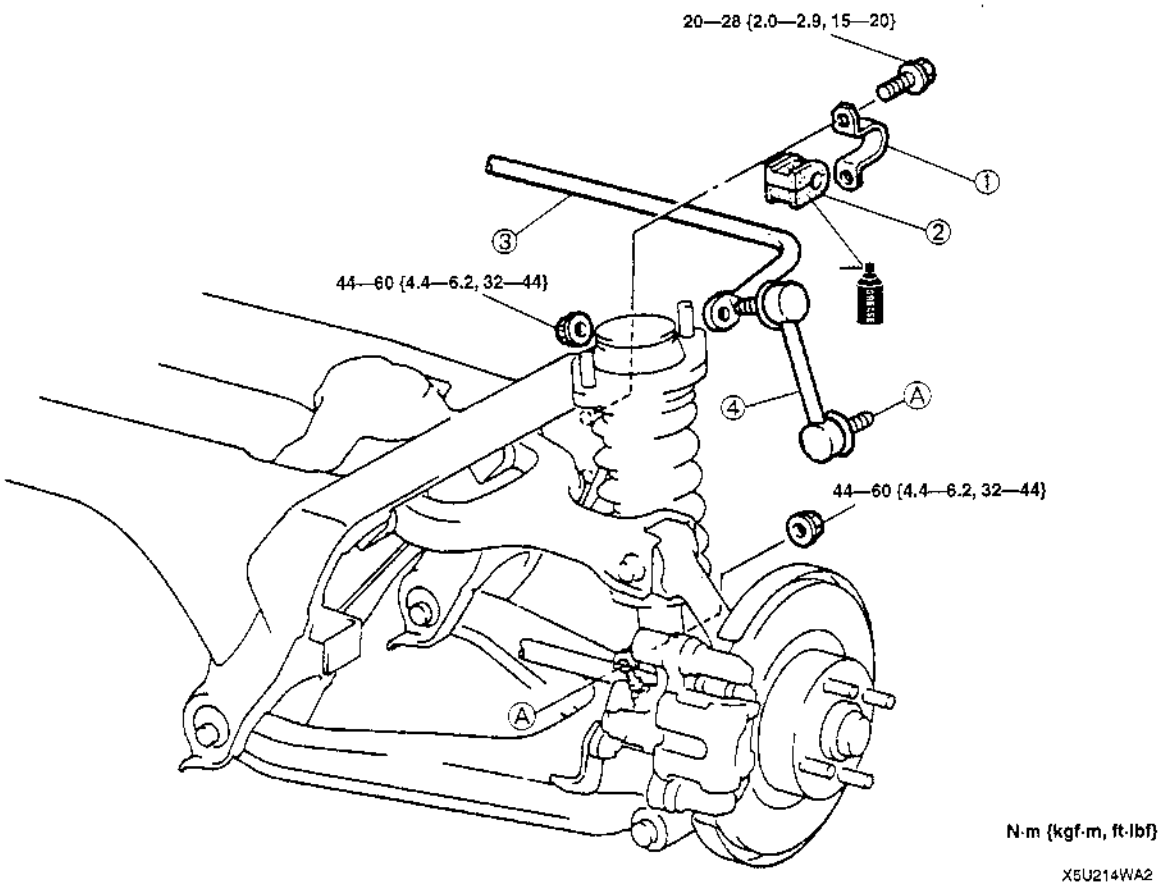

X5U214WA2

1	Stabilizer bracket
2	Stabilizer bushing ☞ Installation Note

3	Stabilizer bar
4	Control link

Stabilizer Bushing Installation Note

- Align the bushing with the installation mark on the stabilizer.

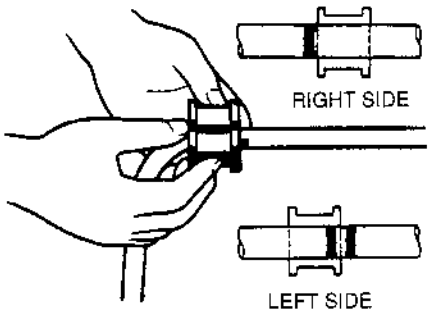

U5U21412

STABILIZER CONTROL LINK INSPECTION

X5U214W08

(Refer to 02–13 STABILIZER CONTROL LINK INSPECTION.)

REAR CROSSMEMBER REMOVAL/INSTALLATION

X5U214W07

Caution

- **Performing the following procedures without first removing the ABS wheel-speed sensor may possibly cause an open circuit in the harness if it is pulled by mistake. Before performing the following procedures, remove the ABS wheel-speed sensor (axle side) and fix it to an appropriate place where the sensor will not be pulled by mistake while servicing the vehicle.**

1. Disconnect the parking brake cable.
2. Remove the rear crossbar.
3. Remove the differential and the power plant frame. (Refer to 03–14 DIFFERENTIAL REMOVAL/INSTALLATION.)
4. Remove the wheel hub and knuckle with the driveshaft. (Refer to 03–12 WHEEL HUB, KNUCKLE REMOVAL/INSTALLATION.)
5. Remove the rear upper arm. (Refer to 02–14 REAR UPPER ARM REMOVAL/INSTALLATION.)
6. Remove the rear lower arm. (Refer to 02–14 REAR LOWER ARM REMOVAL/INSTALLATION.)
7. Remove the rear stabilizer. (Refer to 02–14 REAR STABILIZER REMOVAL/INSTALLATION.)
8. Remove in the order indicated in the table.
9. Install in the reverse order of removal.
10. After installation, do the following steps.
    (1) Adjust the parking brake lever stroke. (Refer to 04–12 PARKING BRAKE LEVER ADJUSTMENT.)
    (2) Adjust the rear wheel alignment.

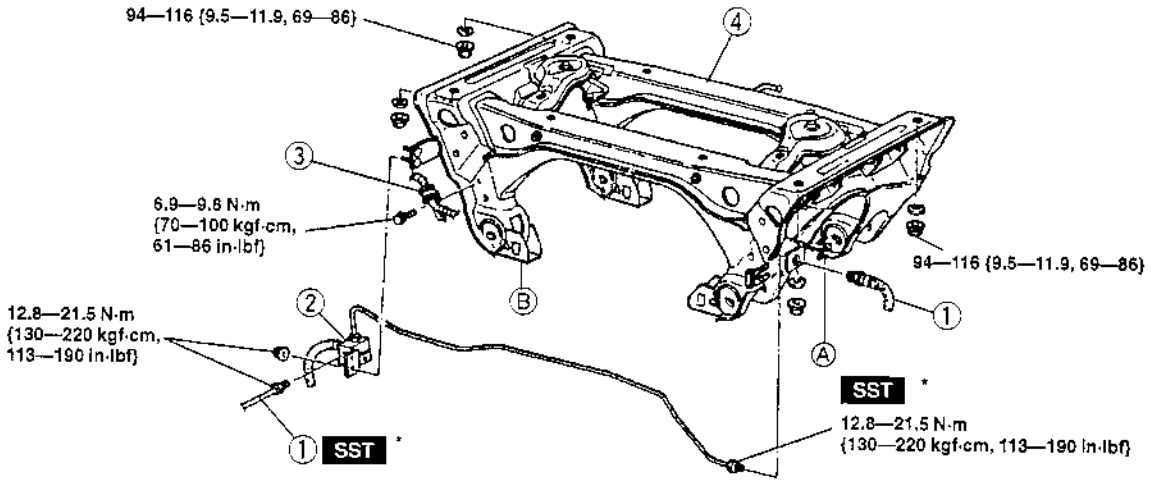

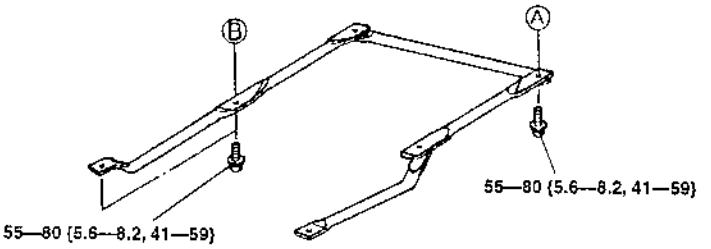

* 49 0259 770B

N·m {kgf·m, ft·lbf}

X5U214WA3

1	Brake pipe and flexible hose
2	Brake pipe and joint

3	Battery cable bracket
4	Rear crossmember

02–50 TECHNICAL DATA

02 SUSPENSION

X5U250W01

Item				Specification	
WHEEL ALIGNMENT					
Front wheel alignment (Unloaded)*1	Total toe-in		(mm {in})	3 ±4 {0.12 ± 0.15}	
			(Degree)	0°18′ ± 24′	
	Maximum steering angle		Inner	38° ± 3°	
			Outer	33° ± 3°	
	Steering axis inclination (reference value)			11°38′	
	Camber angle*2	Height from center of wheel to front fender brim (mm {in})	327—336 {12.9—13.2}	−0°32′ ± 1°	
			337—346 {13.3—13.6}	−0°12′ ± 1°	
			347—356 {13.7—14.0}	0°06′ ± 1°	
			357—366 {14.1—14.4}	0°23′ ± 1°	
			367—376 {14.5—14.8}	0°38′ ± 1°	
	Caster angle*2	Height from center of wheel to rear fender brim (mm {in})	346—355 {13.7—13.9}	6°17′ ± 1°	
			356—365 {14.0—14.3}	6°03′ ± 1°	
			366—375 {14.4—14.7}	5°48′ ± 1°	
			376—385 {14.8—15.1}	5°34′ ± 1°	
			386—395 {15.2—15.5}	5°20′ ± 1°	
Rear wheel alignment (Unloaded)*1	Total toe-in		(mm {in})	3 ±4 {0.12 ± 0.15}	
			(Degree)	0°18′ ± 24′	
	Camber angle*2	Height from center of wheel to rear fender brim (mm {in})	346—355 {13.7—13.9}	−1°14′ ± 1°	
			356—365 {14.0—14.3}	−0°59′ ± 1°	
			366—375 {14.4—14.7}	−0°47′ ± 1°	
			376—385 {14.8—15.1}	−0°38′ ± 1°	
			386—395 {15.2—15.5}	−0°32′ ± 1°	
	Thrust angle			0°48′	
WHEELS AND TIRES					
Standard tire wheel	Size			15×6JJ	14×5 1/2JJ
	Offset		(mm {in})	40 {1.57}	Steel: 45 {1.77} Alluminum alloy: 40 {1.57}
	Pitch circle diameter		(mm {in})	100 {3.94}	
	Material			Alluminum alloy	Steel or alluminum alloy
Standard tire	Size			195/50R15 82V	185/60R14 82H P185/60R14 82H
	Air pressure		(kPa {kgf/cm^2, psi})	180 {1.8, 26}	
	Remaining tread (mm {in})		Standard tire	1.6 {0.063} min.	
			Snow tire	50% of tread	
Standard tire wheel and tire	Lug nut tightening torque		(N·m {kgf·m, ft·lbf})	89—117 {9—12, 66—86}	
	Wheel and tire runout (mm {in})		Radial direction	1.5 {0.059} max.	
			Lateral direction	2.0 {0.078} max.	Steel: 2.5 {0.088} max. Alluminum alloy: 2.0 {0.078} max.
	Wheel imbalance*3		(g {oz})	9 {0.31} max.	10 {0.35} max.

Item			Specification
Temporary spare tire wheel	Size		14×4T
	Offset	(mm {in})	45 {1.77}
	Pitch circle diameter	(mm {in})	100 {3.94}
	Material		Steel
Temporary spare tire	Size		T115/70D14
	Air pressure	(kPa {kgf/cm^2, psi})	412 {4.2, 60}
FRONT SUSPENSION			
Exposed thread of shock absorber piston rod		(mm {in})	15.7—17.7 {0.62—0.69}
Lower arm ball joint rotation torque (Pull scale reading)		(N {kgf, lbf})	3.5—18.2 {0.35—1.95, 0.77—4.29}
Upper arm ball joint rotation torque (Pull scale reading)		(N {kgf, lbf})	3.0—22.1 {0.3—2.3, 0.63—5.07}
Stabilizer control link rotation torque		(N·m {kgf·cm, in·lbf})	0.14—2.7 {1.4—27, 1.3—23.4}
REAR SUSPENSION			
Exposed thread of shock absorber piston rod		(mm {in})	15.7—17.7 {0.62—0.69}
Stabilizer control link rotation torque		(N·m {kgf·cm, in·lbf})	0.14—2.7 {1.4—27, 1.3—23.4}

*1 : Fuel tank full; engine coolant and engine oil at specified levels; spare tire, jack, and tools in designated positions.

*2 : Difference between left and right must not exceed 1°30′.

*3 : One balance weight; max. 60 g {2.1 oz}. If the total weight exceeds 100 g {3.5 oz} on one side, rebalance after moving the tire around on the rim. Do not use more than two balance weights on the inner or outer side of the wheel.

02–60 SERVICE TOOLS

02 SUSPENSION SST

X5U250W01

49 0180 510B Preload measuring attachment T0180510B	49 H028 301 Dust boot installer TH028301X	49 0259 770B Flare nut wrench T0259770B
49 0107 680A Engine stand T0107680A	49 T034 1A0 Coil spring compressor TT0341A0X	49 T034 101 Spring compressor (Part of 49 T034 1A0) TT034101X
49 T034 102 Stand (Part of 49 T034 1A0) TT034102X	49 T034 103 Hook (Part of 49 T034 1A0) TT034103X	49 T034 104 Support (Part of 49 T034 1A0) TT034104X
49 T034 105 Attachment TT034105X	49 T028 3A0 Ball joint puller set TT0283A0X	49 T028 303 Body (Part of 49 T028 3A0) TT028303X
49 T028 304 Attachment (Part of 49 T028 3A0) TT028304X	49 B034 201 Support block TB034201X	49 N028 201 Support block TN028201X
49 0118 850C Ball joint puller T0118850C	—	—

DRIVELINE/AXLE

03
SECTION

03–10 GENERAL PROCEDURES

PRECAUTION (DRIVELINE/AXLE)

X5U310W01

Wheels and tires removal/installation

- The removal and installation procedures for the wheels and tires are not mentioned in this section. When a wheel is removed, retighten it to **89—117 N·m {9.0—12.0 kgf·m, 66—86 ft·lbf}**.

Suspension arm removal/installation

- Tighten any part of the suspension that uses rubber bushings only after vehicle has been lowered and unloaded.*

*Unloaded: Fuel tank is full. Engine coolant and engine oil are at specified level. Spare tire, jack, and tools are in designated position.

03–11 FRONT AXLE

WHEEL HUB, STEERING KNUCKLE PREINSPECTION

Wheel Bearing Play

1. Remove the brake caliper component and disc plate.
2. Position a dial indicator against the wheel hub. Push and pull the wheel hub by hand in the axial direction and measure the wheel bearing play.
3. If the bearing play exceeds the specification, inspect and adjust the locknut torque or replace the wheel bearing as necessary.

Maximum wheel bearing play
0.05 mm {0.002 in}

X5U311W01

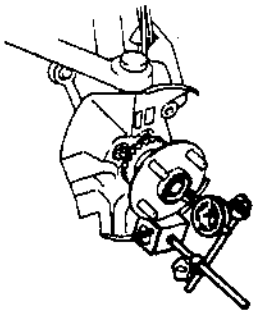

U5U31101

WHEEL HUB BOLT REPLACEMENT

U5U311AB

1. Remove the wheel hub bolt by using the **SSTs**.

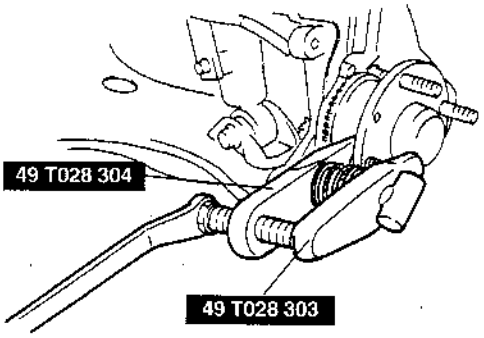

U5U31102

2. As shown in the figure, install the wheel hub bolt into the wheel hub and set a washer and wheel hub nut in the wheel hub bolt.
3. Tighten the wheel hub nut while holding the wheel hub by using a brass bar.

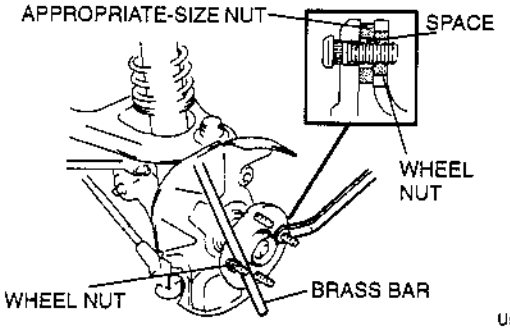

U5U31103

WHEEL HUB, STEERING KNUCKLE REMOVAL/INSTALLATION

X5U311W02

Caution

- **Performing the following procedures without first removing the ABS wheel-speed sensor may possibly cause an open circuit in the harness if it is pulled by mistake. Before performing the following procedures, remove the ABS wheel-speed sensor (axle side) and fix it to an appropriate place where the sensor will not be pulled by mistake while servicing the vehicle.**

1. Remove in the order indicated in the table.
2. Install in the reverse order of removal.
3. After installation, adjust the total toe-in. (Refer to 02–11 WHEEL ALIGNMENT, Total Toe-in Adjustment.)

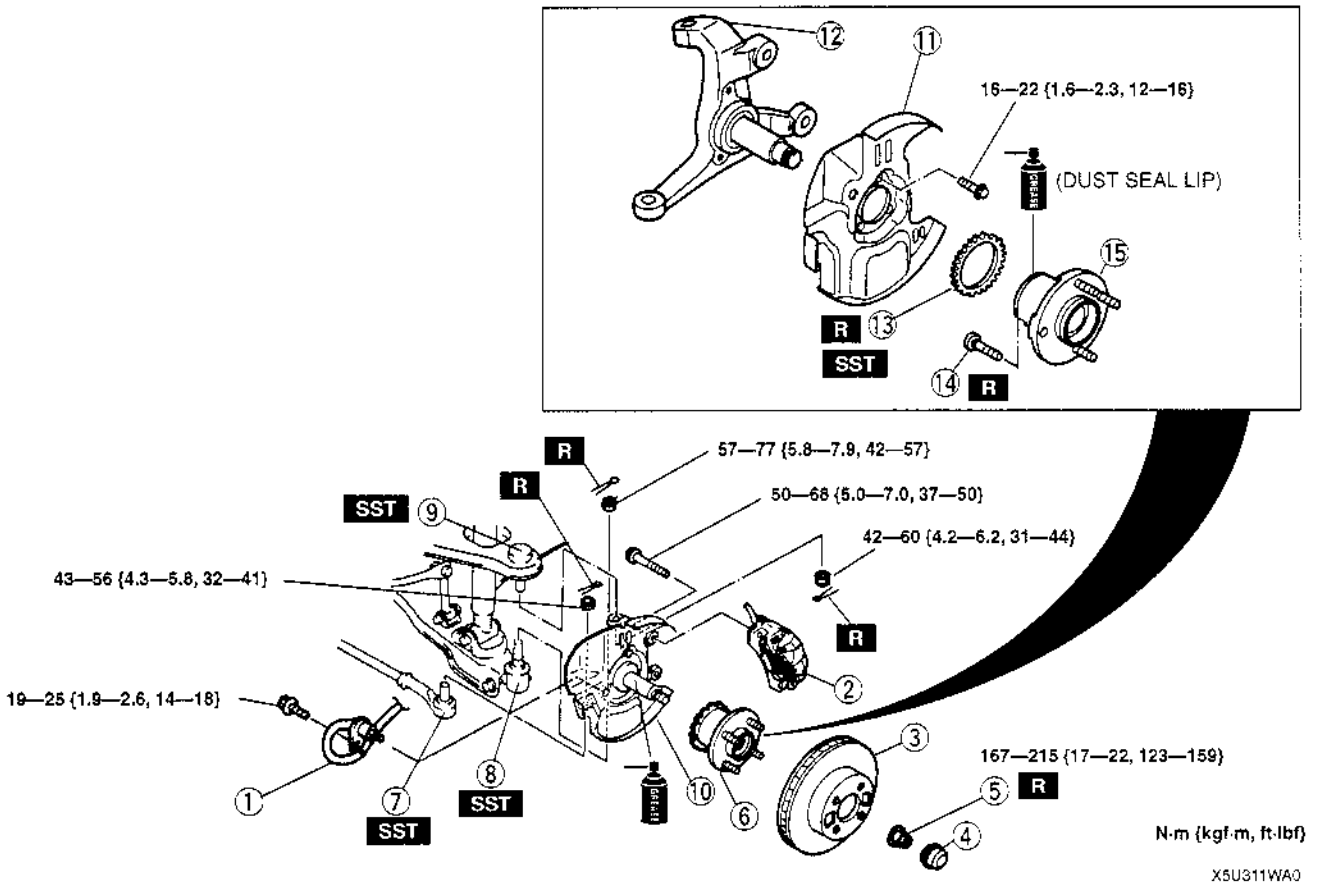

1	ABS wheel-speed sensor (if equipped)
2	Brake caliper component
3	Disc plate ☞ 04–11 FRONT BRAKE (DISC) REMOVAL/INSTALLATION, Disc Plate Removal Note ☞ 04–11 FRONT BRAKE (DISC) REMOVAL/INSTALLATION, Disc Plate Installation Note
4	Hub cap
5	Locknut ☞ Installation Note
6	Front wheel hub component
7	Tie-rod end ball joint ☞ 06–11 STEERING GEAR AND LINKAGE REMOVAL/INSTALLATION, Tie-rod End Ball Joint Removal Note

8	Front lower arm ball joint ☞ 02–13 FRONT LOWER ARM REMOVAL/INSTALLATION, Front Lower Arm Ball Joint Removal Note
9	Front upper arm ball joint ☞ 02–13 FRONT UPPER ARM REMOVAL/INSTALLATION, Front Upper Arm Removal Note
10	Dust cover and knuckle spindle
11	Dust cover
12	Knuckle spindle
13	ABS sensor rotor ☞ Removal Note ☞ Installation Note
14	Wheel hub bolt ☞ Removal Note ☞ Installation Note
15	Front wheel hub

ABS Sensor Rotor Removal Note

- Secure the front wheel hub in a vise and remove the sensor rotor by using the **SSTs.**

Note

- The sensor rotor does not need to be removed unless replacing it.

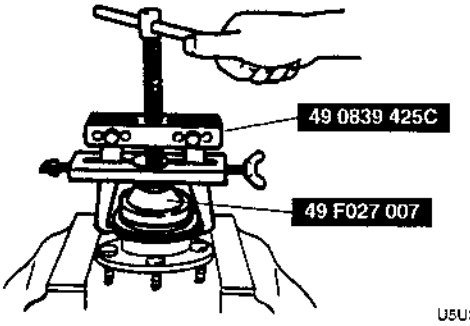

U5U31105

Wheel Hub Bolt Removal Note

Note

- The hub bolts do not need to be removed unless replacing them.

- Remove the hub bolts by using a press.

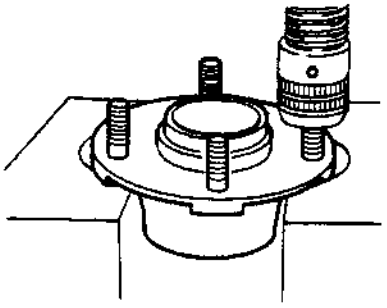

U5U31106

Wheel Hub Bolt Installation Note

- Install the new hub bolts by using a press.

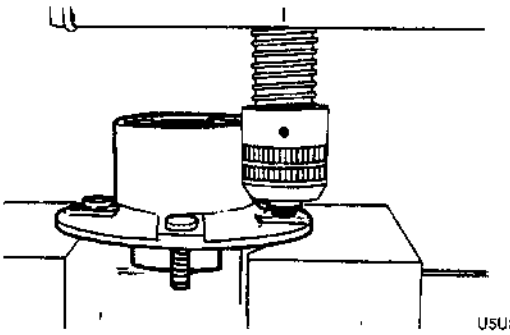

U5U31107

ABS Sensor Rotor Installation Note

- Install a new sensor rotor by using the **SST** and a press.

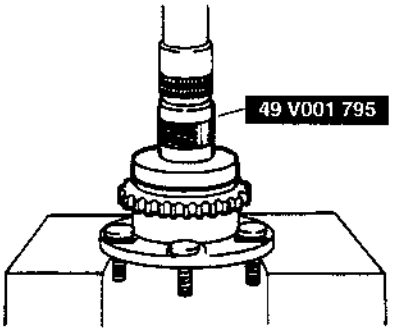

U5U31108

Locknut Installation Note

- Install a new locknut and stake it.

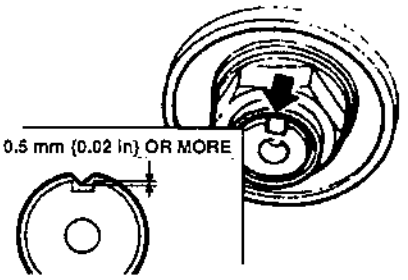

U5U31109

03–12 REAR AXLE

WHEEL HUB, KNUCKLE PREINSPECTION

X5U312W01

Wheel Bearing Play

1. Remove the wheel, brake caliper component, and disc plate.
2. Position a dial indicator against the wheel hub. Push and pull the wheel hub by hand in the axial direction and measure the wheel bearing play. If the bearing play exceeds the specification, inspect and adjust the locknut torque or replace the wheel bearing as necessary.

Maximum wheel bearing play
0.05 mm {0.002 in}

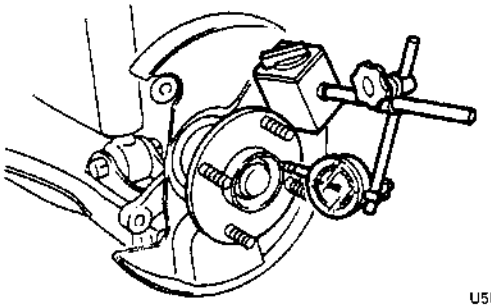

U5U31201

WHEEL HUB, KNUCKLE REMOVAL/INSTALLATION

X5U312W02

Caution

- **Performing the following procedures without first removing the ABS wheel-speed sensor may possibly cause an open circuit in the harness if it is pulled by mistake. Before performing the following procedures, remove the ABS wheel-speed sensor (axle side) and fix it to an appropriate place where the sensor will not be pulled by mistake while servicing the vehicle.**

1. Remove in the order indicated in the table.
2. Install in the reverse order of removal.

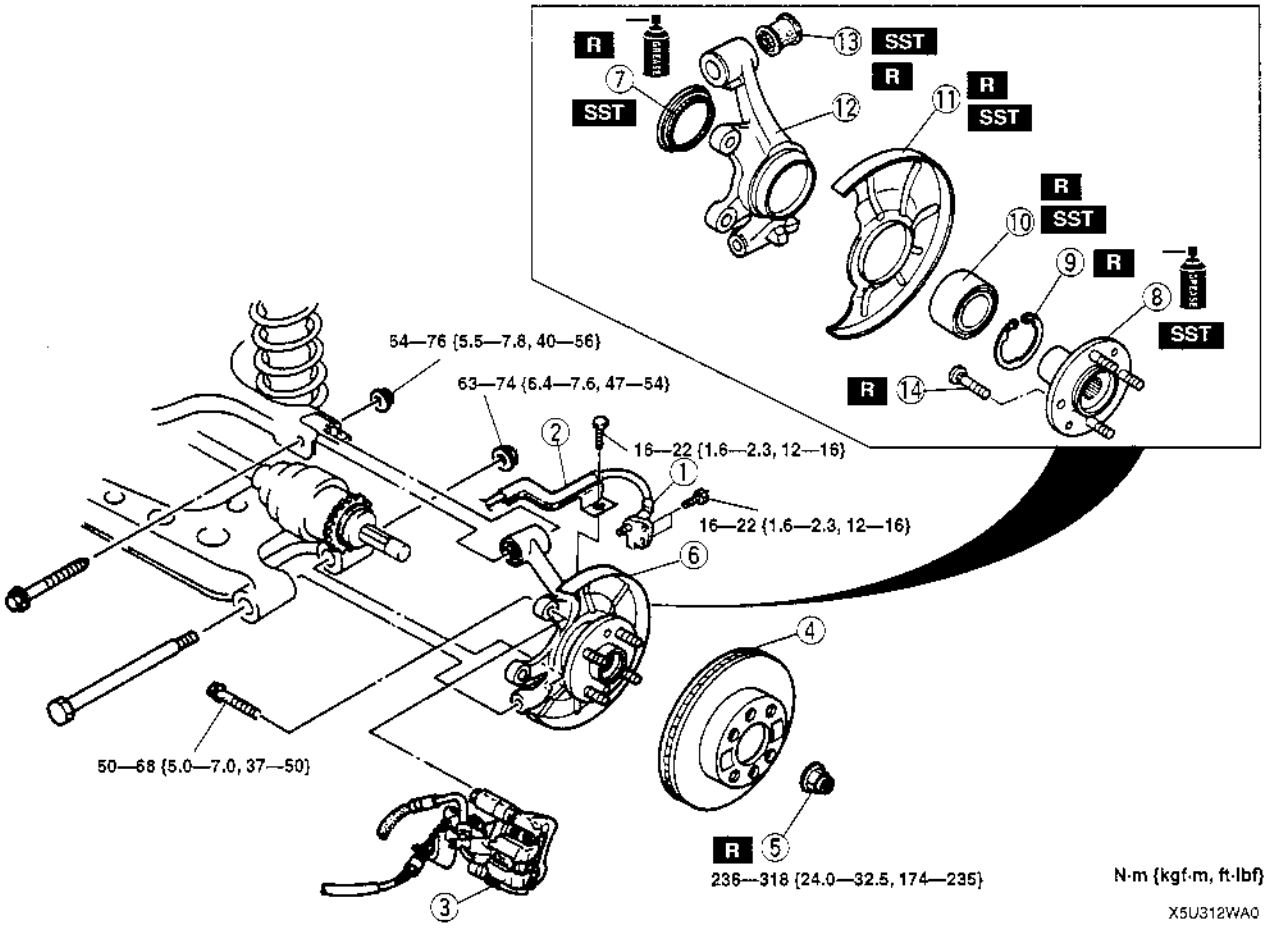

1	ABS wheel-speed sensor (if equipped)
2	Sensor bracket
3	Brake caliper component
4	Disc plate ☞ 04–11 FRONT BRAKE (DISC) REMOVAL/INSTALLATION, Disc Plate Removal Note ☞ 04–11 FRONT BRAKE (DISC) REMOVAL/INSTALLATION, Disc Plate Installation Note
5	Locknut ☞ Installation Note
6	Knuckle, wheel hub, and dust cover
7	Oil seal ☞ Installation Note
8	Rear wheel hub ☞ Removal Note ☞ Installation Note

9	Retaining ring
10	Wheel bearing ☞ Removal Note ☞ Installation Note
11	Dust cover ☞ Removal Note ☞ Installation Note
12	Knuckle
13	Bushing ☞ Removal Note ☞ Installation Note
14	Wheel hub bolt ☞ 03–11 WHEEL HUB, STEERING KNUCKLE REMOVAL/INSTALLATION, Wheel hub Bolt Removal Note

Rear Wheel Hub Removal Note

- Press out the rear wheel hub component by using the **SSTs**.

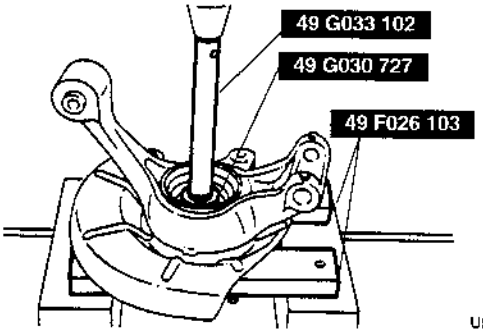

U5U31203

Wheel Bearing Removal Note

1. Press out the wheel bearing by using the **SSTs**.

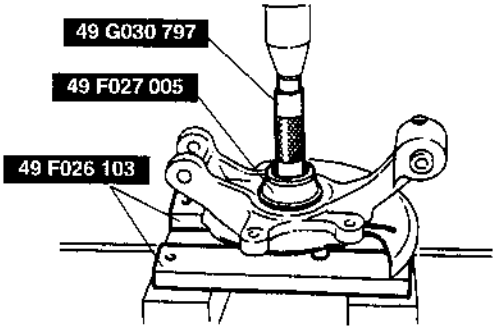

U5U31204

2. Move the bearing inner race away from the rear wheel hub component by using a chisel.

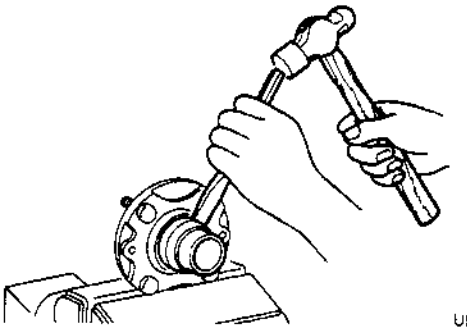

U5U31205

3. Press the bearing inner race off the wheel hub by using the **SSTs**.

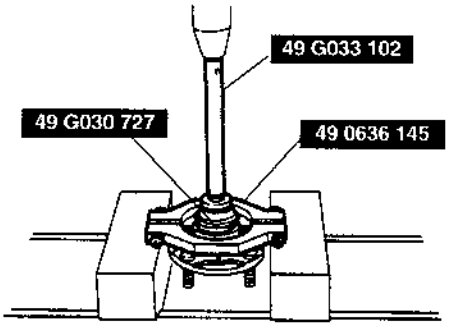

U5U31206

Dust Cover Removal Note

Note

- The dust cover does not need to be removed unless replacing it.

1. Mark the dust cover and knuckle for proper reassembly.

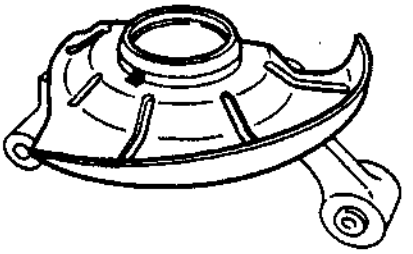

U5U31207

2. Remove the dust cover by using a chisel.

Bushing Removal Note

- Press out the bushing by using the **SST** and a socket.

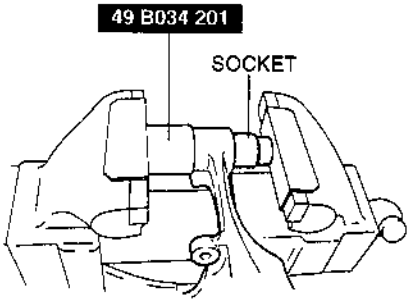

U5U31208

Bushing Installation Note

- Apply soapy water to the bushing, then press it into the knuckle by using the **SST**.

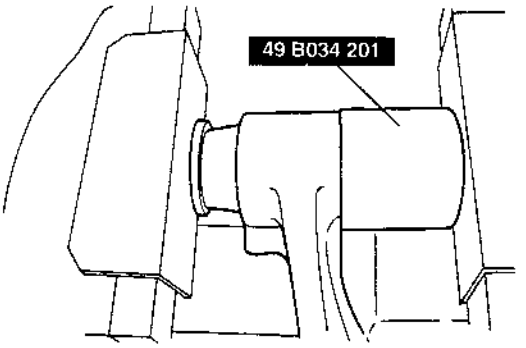

U5U31209

Dust Cover Installation Note

1. Mark the new dust cover as the same point as the removed one.

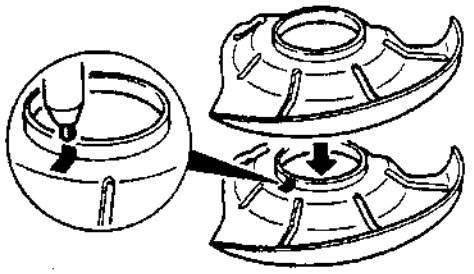

U5U312'0

2. Align the marks of the new dust cover and the knuckle.
3. Install the new dust cover by using the **SSTs**.

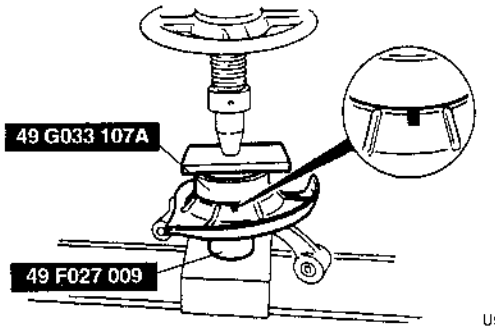

U5U312'1

Wheel Bearing Installation Note

- Press the new wheel bearing into the knuckle by using the **SSTs**.

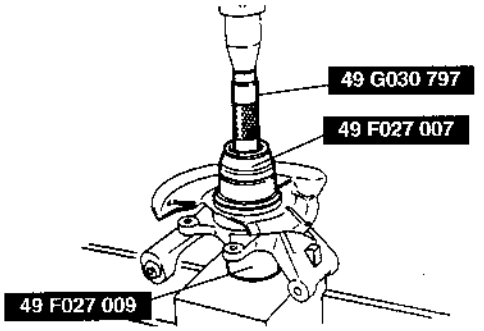

U5U31212

Rear Wheel Hub Installation Note

1. Apply grease to the wheel bearing inner race.
2. Press the rear wheel hub component in by using the **SST**.

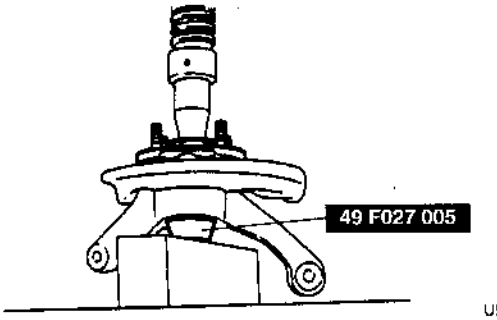

U5U31213

Oil Seal Installation Note

1. Apply grease to the new oil seal lip.
2. Install the new oil seal by using the **SSTs**.

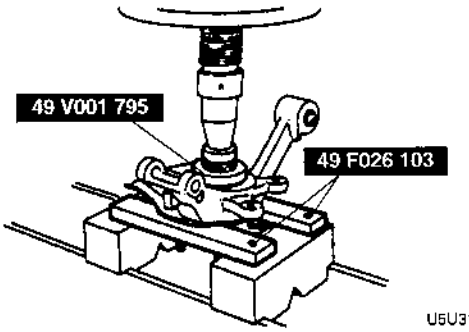

U5U31214

Locknut Installation Note

- Install a new locknut and stake it.

Tightening torque
236—318 N·m
{24.0—32.5 kgf·m, 174—235 ft·lbf}

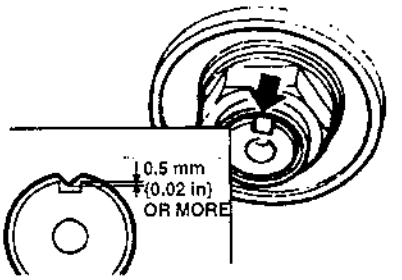

X5U312WA1

03–13 DRIVE SHAFT

DRIVE SHAFT PREINSPECTION

X5U313W01

1. Inspect the dust boot on the drive shaft for cracks, damage, leaking grease, and a loose boot band.
2. Inspect the drive shaft for bending, cracks, and wear of the joints and splines.
3. Repair or replace the drive shaft as necessary.

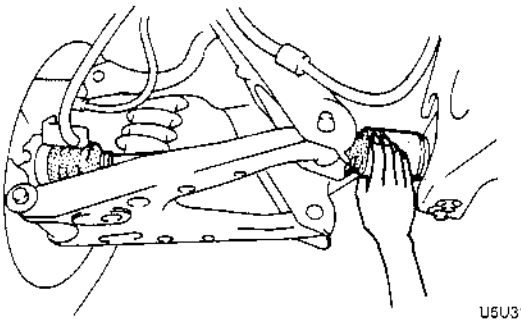

U5U31301

DRIVE SHAFT REMOVAL/INSTALLATION

X5U313W02

Caution

- **Performing the following procedures without first removing the ABS wheel-speed sensor may possibly cause an open circuit in the harness if it is pulled by mistake. Before performing the following procedures, remove the ABS wheel-speed sensor (axle side) and fix it to an appropriate place where the sensor will not be pulled by mistake while servicing the vehicle.**

1. Remove in the order indicated in the table.
2. Install in the reverse order of removal.

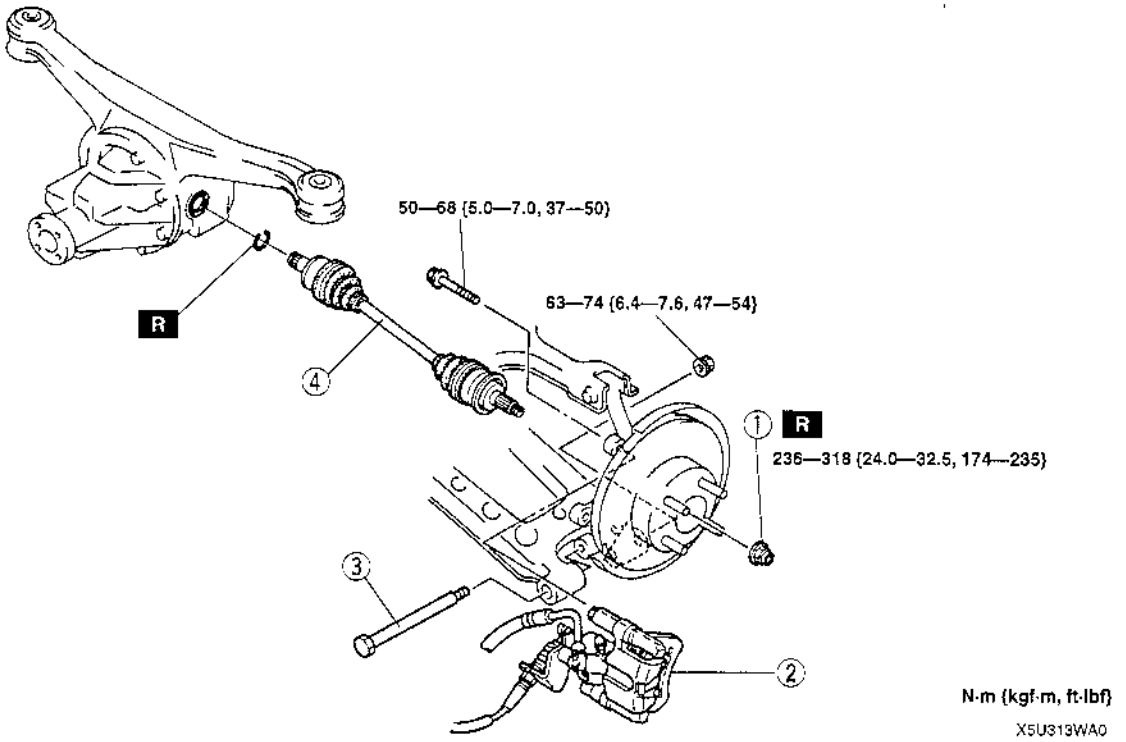

1	Locknut ☞ 03–11 WHEEL HUB, STEERING KNUCKLE REMOVAL/INSTALLATION, Locknut Installation Note
2	Brake caliper component

3	Bolt
4	Drive shaft ☞ Removal Note ☞ Installation Note

Drive Shaft Removal Note

Note

- If the drive shaft will not come out of the rear hub support easily, install a discarded nut onto the drive shaft so that the nut is flush with the end of the drive shaft. Tap the nut with a copper hammer to loosen the drive shaft from the wheel hub.

1. Pull the rear hub support from the drive shaft.
2. Remove the drive shaft from the differential by using a pry bar.

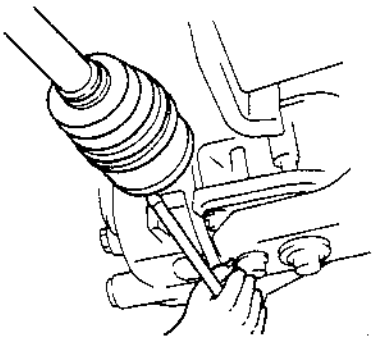

Drive Shaft Installation Note

1. Install a new clip onto the drive shaft.
2. Measure the outer diameter of the clip after installing, and replace the clip if it exceeds the specification.

Caution

- **The sharp edges of the drive shaft snap ring can slice or puncture the oil seal. Be careful when installing the drive shaft to the transmission.**

3. With the ends of the clip facing upward, push the drive shaft into the differential.
4. After installation, pull outward on the double offset joint outer ring and verify that the drive shaft is securely held by the clip.

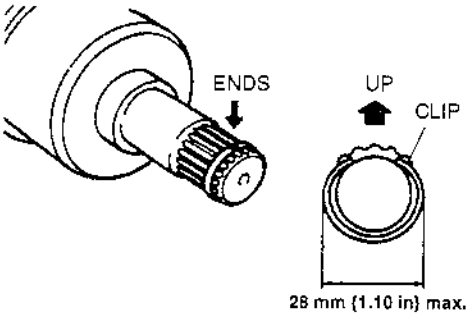

DRIVE SHAFT DISASSEMBLY/ASSEMBLY

X5U313W03

1. Disassemble in the order indicated in the table.
2. Assemble in the reverse order of disassembly.

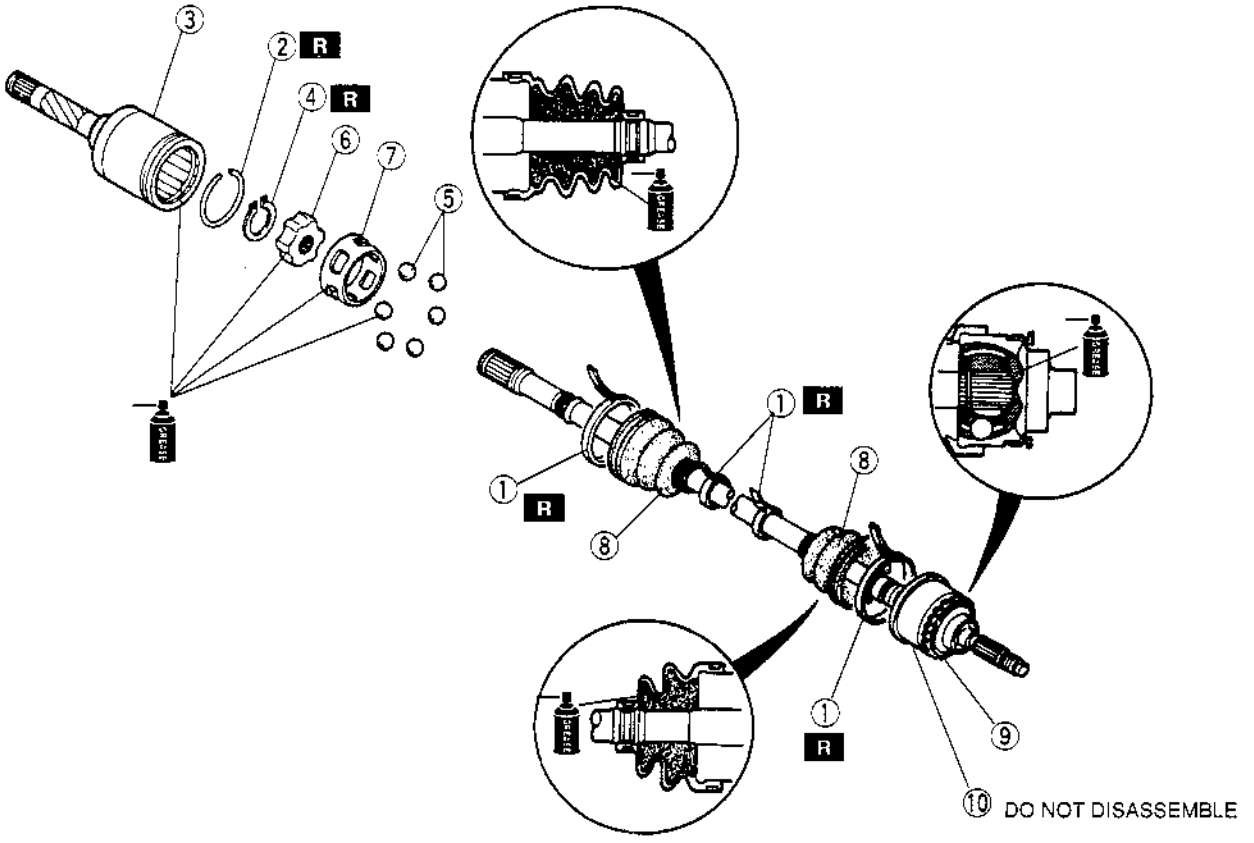

U5U31305

1	Boot bands ☞ Disassembly Note ☞ Assembly Note
2	Clip ☞ Disassembly Note
3	Outer ring
4	Snap ring ☞ Disassembly Note
5	Balls ☞ Disassembly Note ☞ Assembly Note
6	Inner ring ☞ Disassembly Note ☞ Assembly Note
7	Cage ☞ Disassembly Note ☞ Assembly Note
8	Boots ☞ Disassembly Note ☞ Assembly Note
9	ABS sensor rotor ☞ Disassembly Note ☞ Assembly Note
10	Shaft and bell joint component

Boot Bands Disassembly Note

- To remove the boot bands, pry up the locking clip by using a screwdriver, then raise the end of the band.

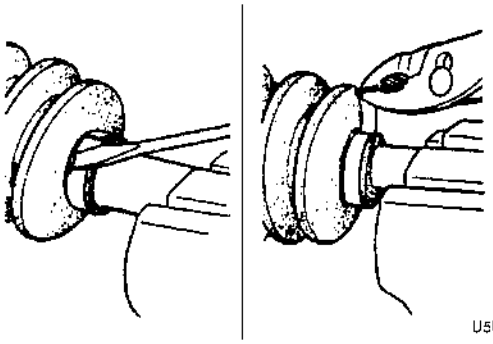

U5U31306

Clip Disassembly Note

1. Mark the drive shaft and outer ring with paint as shown.
2. Remove the clip.

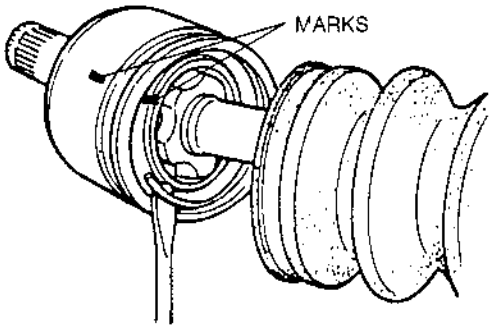

U5U31307

Snap Ring Disassembly Note

1. Mark the drive shaft end and inner ring with paint as shown.
2. Remove the snap ring by using snap-ring pliers.

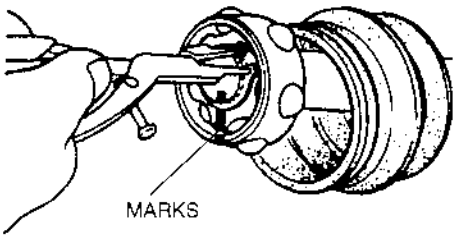

U5U31308

Balls, Inner Ring, Cage Disassembly Note

1. Insert a screwdriver between the inner ring and cage to remove the balls.

U5U31309

2. Mark the inner ring and cage with paint.
3. Turn the cage approximately **30°**, then pull it away from the inner ring.

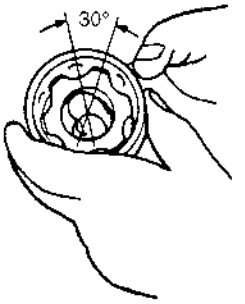

U5U31310

Boots Disassembly Note

1. Wrap the shaft splines with tape.

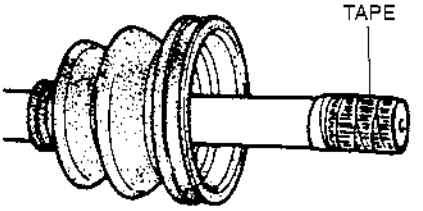

U5U31311

2. Remove the boot.

ABS Sensor Rotor (With ABS) Disassembly Note

Note
- The sensor rotor does not need to be removed unless replacing it.

- Tap the ABS sensor rotor off the bell joint outer race by using a chisel.

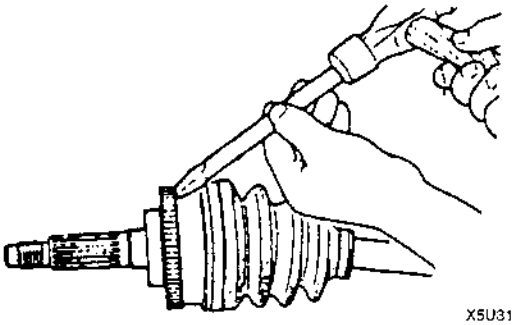

X5U313WA2

ABS Sensor Rotor (With ABS) Assembly Note
- Press in the ABS sensor rotor by using the **SST**.

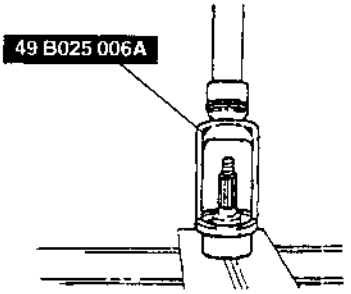

X5U313WA3

Boots Assembly Note
1. Before putting the boot onto the shaft, wrap the shaft splines with tape.

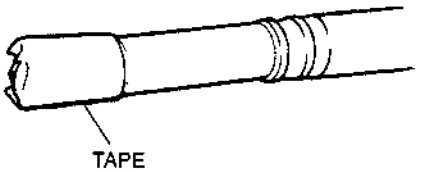

U5U31312

Note
- The initials DOJ and BJ are stamped on the wheel side and differential side boots respectively.

2. Install the wheel side and differential side boots, noting the shape and size of each one in the figure.

Outer diameter of large boot end
Differential side: 87.4 mm {3.441 in}
Wheel side: 90.8 mm {3.575 in}

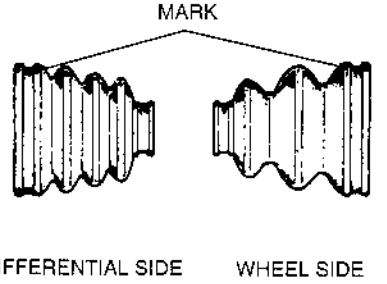

U5U31313

Cage, Inner Ring, Balls Assembly Note
1. Align the marks and install the balls to the inner ring.
2. Install the cage, inner ring, and ball component to the drive shaft in the direction shown in the figure. The larger diameter of the cage should be facing the snap ring groove.
3. Install a new snap ring in the drive shaft snap ring groove.

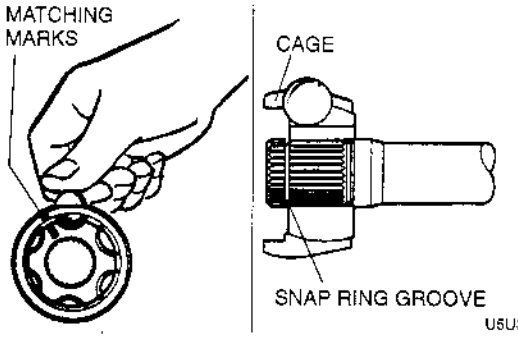

U5U31314

4. Apply the specified grease (supplied in the boot kit) to the joints and boots.

Total quantity
Differential side: 85—105 g {3.00—3.71 oz}
Wheel side: 55—75 g {1.94—2.65 oz}

5. Align the marks, then install a new clip.

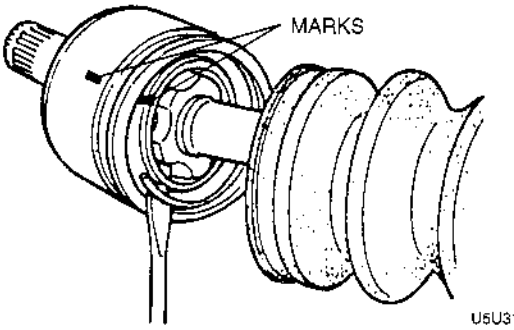

U5U31315

Boot Bands Assembly Note

1. Verify that the boots are not dented or twisted.
2. Set the drive shaft to the standard length.

   Standard length
   772.6—782.6 mm {30.42—30.81 in}

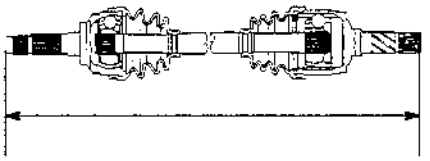

U5U31316

3. Release any trapped air from the boots by carefully lifting up the small end of each boot with a cloth-wrapped screwdriver.
4. Verify that the drvie shaft length is within the standard.
5. If the drive shaft length is not within the standard, return to step 1.
6. Fold the new band back by pulling on the end of it with pliers. The band should be folded in the direction opposite the forward revolving direction of the drive shaft.
7. Lock the end of the band by bending the locking clips.

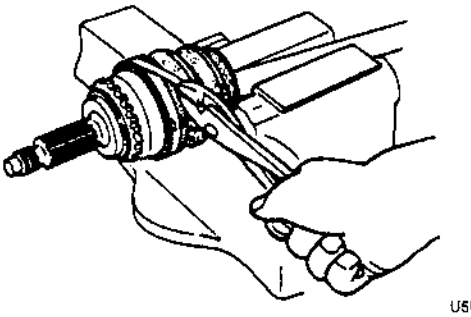

U5U31317

03–14 DIFFERENTIAL

DIFFERENTIAL OIL INSPECTION

X5U314W01

1. Remove the filler plug.
2. Verify that the oil is at the brim of the filler plug hole. If it is low, add the specified oil.

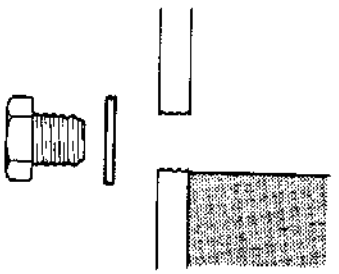

U5U31401

3. Install the filler plug.

Tightening torque
40—53 N·m {4.0—5.5 kgf·m, 29—39 ft·lbf}

DIFFERENTIAL OIL REPLACEMENT

X5U314W02

1. Remove the filler and drain plugs.

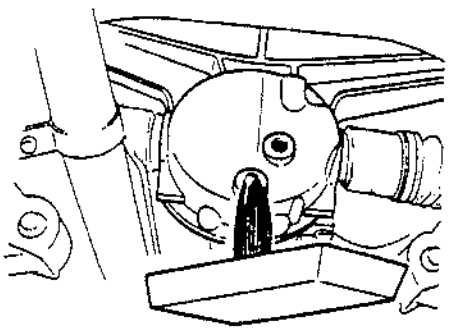

U5U31444

2. Drain the differential oil into a container.
3. Wipe the plugs clean.
4. Install the drain plug and a new washer.

Tightening torque
40—53 N·m {4.0—5.5 kgf·m, 29—39 ft·lbf}

5. Add the specified oil from the filler plug until the level reaches the brim of the plug hole.

Specified oil
Type (API service GL-5)
Above –18 °C {0 °F}: SAE 90
Below –18 °C {0 °F}: SAE 80
Capacity: 1.00 L {1.06 US qt, 0.88 Imp qt}

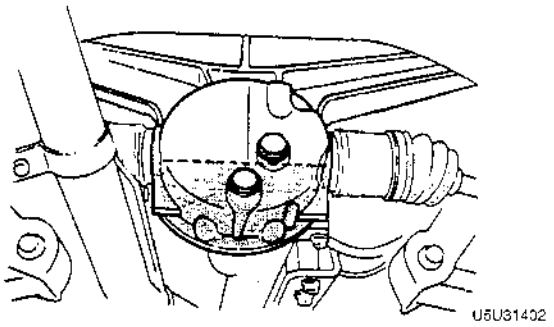

6. Install the filler plug.

Tightening torque
40—53 N·m {4.0—5.5 kgf·m, 29—39 ft·lbf}

OIL SEAL REPLACEMENT

1. On level ground, jack up the vehicle and support it on safety stands.
2. Drain the differential oil.

Note
- For easier installation, do not depress the brake pedal after removing the brake caliper component.

3. Remove the brake caliper component, then suspend the brake caliper component by using a rope.
4. Remove the lower arm installation bolt and nut.

Note
- If the drive shaft will not come out of the rear hub support easily, install a discarded nut onto the drive shaft so that the nut is flush with the end of the drive shaft. Tap the nut with a copper hammer to loosen the drive shaft from the wheel hub.

5. Pull the rear hub support from the drive shaft.
6. Remove the drive shaft from the differential. (Refer to 03–13 DRIVE SHAFT REMOVAL/INSTALLATION, Drive Shaft Removal Note.)
7. Remove the oil seal.
8. Apply lithium-based grease to the new oil seal lip and install it by using the **SST**.

X5U314W03

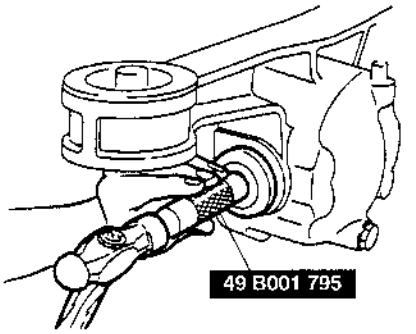

U5U31404

9. Install a new clip onto the drive shaft. (Refer to 03–13 DRIVE SHAFT REMOVAL/INSTALLATION, Drive Shaft Installation Note.)
10. Install the lower arm installation bolt and nut.

Tightening torque
47—66 N·m {4.7—6.8 kgf·m, 34—49 ft·lbf}

11. Install the brake caliper component.

Tightening torque
50—68 N·m {5.0—7.0 kgf·m, 37—50 ft·lbf}

12. Add the specified oil. (Refer to 03–14 DIFFERENTIAL OIL REPLACEMENT.)
13. Adjust the rear wheel alignment.

DIFFERENTIAL REMOVAL/INSTALLATION

X5U314W04

1. Drain the differential oil.
2. Remove the main silencer. (Refer to 01–15 EXHAUST SYSTEM REMOVAL/INSTALLATION.)
3. Remove in the order indicated in the table.
4. Install in the reverse order of removal.
5. Add the specified oil to the specified level. (Refer to 03–14 DIFFERENTIAL OIL REPLACEMENT.)

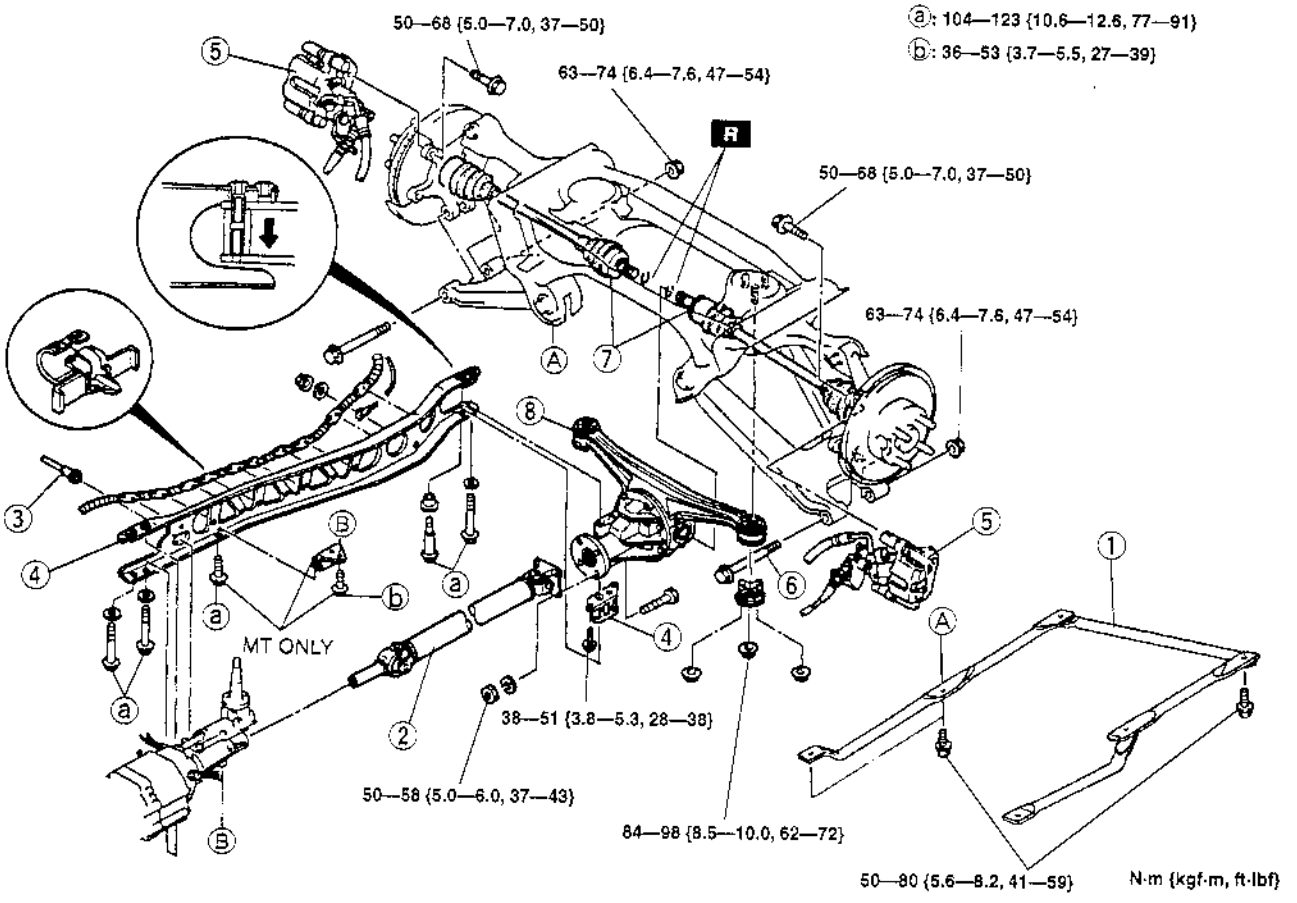

1	Rear crossbar
2	Propeller shaft ☞ 03–15 PROPELLER SHAFT REMOVAL/INSTALLATION
3	Speedometer cable
4	Power plant frame (PPF), Differential mounting spacer ☞ Removal Note ☞ 05–11 MANUAL TRANSMISSION REMOVAL/INSTALLATION, Power Plant Frame (PPF) Installation Note

5	Brake caliper component
6	Bolt
7	Drive shafts ☞ 03–13 DRIVE SHAFT REMOVAL/INSTALLATION, Drive Shaft Removal Note ☞ 03–13 DRIVE SHAFT REMOVAL/INSTALLATION, Drive Shaft Installation Note
8	Differential ☞ Removal Note

Power Plant Frame (PPF), Differential Mounting Spacer Removal Note

1. Disconnect the wire harness from the PPF.
2. Support the transmission with a jack.

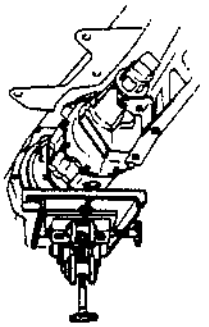

X5U314WA1

3. Remove the PPF bracket.

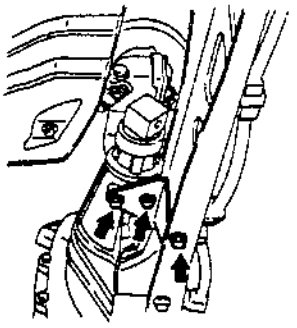

X5U314WA2

4. Remove the differential-side bolts, and pry out the spacer.

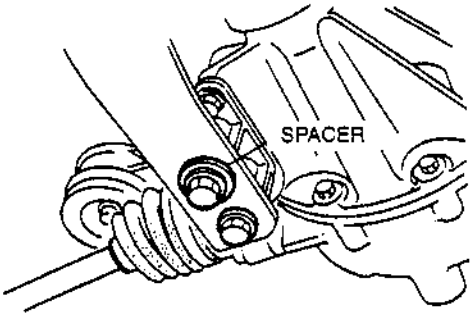

X5U314WA3

5. Remove the differential mounting spacer.

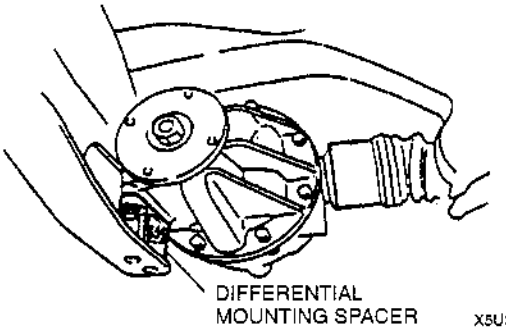

X5U314WA4

Caution

- **Removing the PPF spacers will reduce the performance of the PPF. If the spacers are removed, replace the PPF as an assembly.**

6. Remove the transmission-side bolts, and remove the PPF.

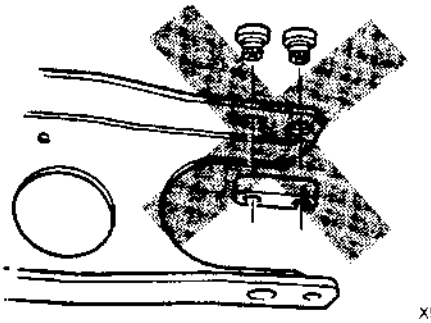

X5U314WA5

Note

- If the sleeve cannot be removed easily, tap the side of sleeve with a plastic hammer.

7. Remove the sleeve.
8. To prevent damaging the fire wall, crank angle sensor, and engine mount, support the transmission as follows.
   (1) Prepare a steel plate (as shown in the figure), a wooden block, bolts (M8 × 1.25), and washers.

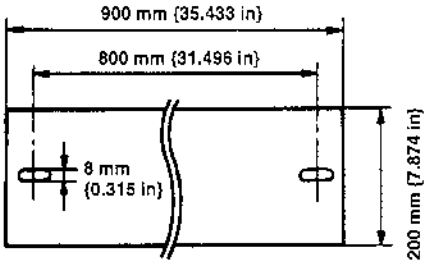

U5U31407

   (2) Install the parts as shown in the figure.

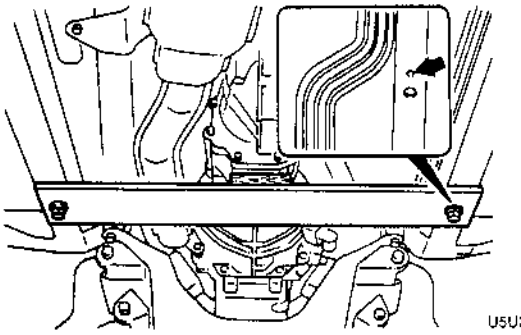

U5U31408

Differential Removal Note

1. Support the differential by using a jack.
2. Lower the differential and move it forward.

DIFFERENTIAL DISASSEMBLY/ASSEMBLY

X5U314W05

1. Disassemble in the order shown in the figure indicated in the table.
2. Assemble in the reverse order of disassembly.

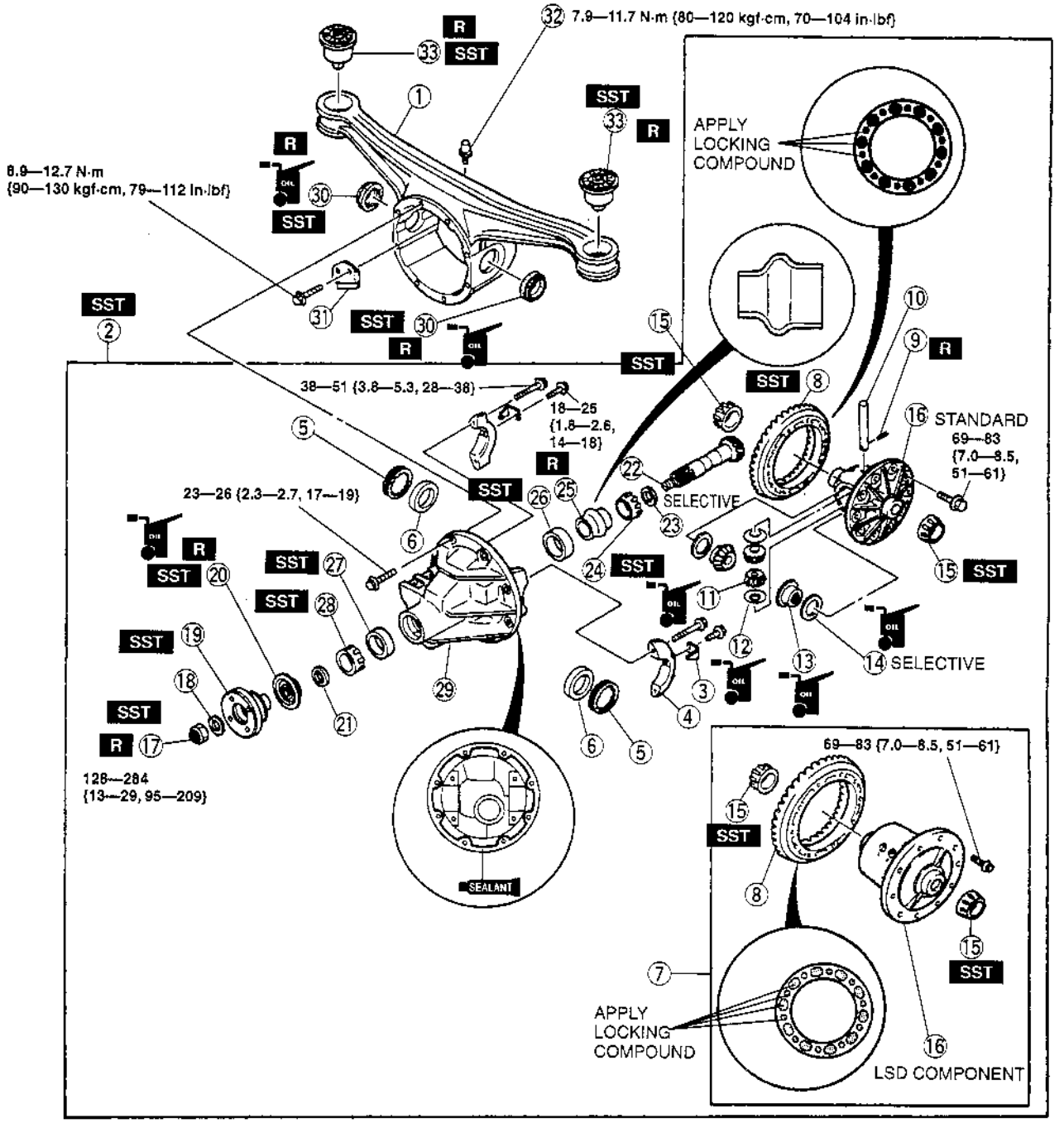

N·m {kgf·m, ft·lbf}

X5U314WA6

1	Differential case ☞ Disassembly Note
2	Differential gear component ☞ Disassembly Note
3	Lock plates
4	Bearing caps ☞ Disassembly Note
5	Adjusting nuts ☞ Disassembly Note

6	Bearing outer races (side bearing)
7	Gear case component (LSD)
8	Ring gear
9	Knock pin (standard) ☞ Disassembly Note
10	Pinion shaft (standard)
11	Pinion gears (standard)
12	Thrust washers (standard)

13	Side gears (standard)
14	Thrust washers (standard) ☞ Assembly Note
15	Bearing inner races (side bearing) ☞ Disassembly Note
16	Gear case
17	Locknut (companion flange) ☞ Disassembly Note
18	Washer
19	Companion flange ☞ Disassembly Note
20	Oil seal (companion flange)
21	Washer
22	Drive pinion ☞ Disassembly Note
23	Spacer
24	Bearing inner race (rear bearing) ☞ Disassembly Note ☞ Assembly Note
25	Collapsible spacer
26	Bearing outer race (rear bearing) ☞ Disassembly Note ☞ Assembly Note
27	Bearing outer race (front bearing) ☞ Disassembly Note ☞ Assembly Note
28	Bearing inner race (front bearing) ☞ Assembly Note
29	Differential carrier
30	Oil seal ☞ Assembly Note
31	Baffle
32	Breather
33	Differential mount ☞ Disassembly Note ☞ Assembly Note

Differential Case Disassembly Note

Caution

- **The differential case is made of aluminum, and is therefore easily dented and scratched by metal tools. When separating the differential carrier from the case, use only a plastic hammer at the point shown in the figure.**

- Strike the differential carrier with a plastic hammer to separate it from the case.

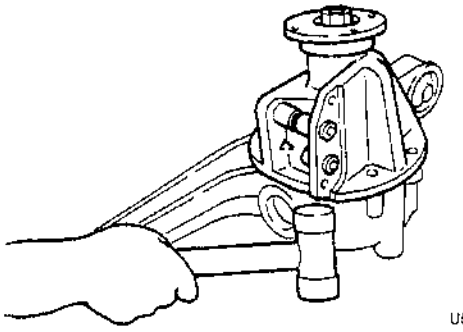

U5U31410

Differential Gear Component Disassembly Note

- Mount the differential gear component on the **SSTs**.

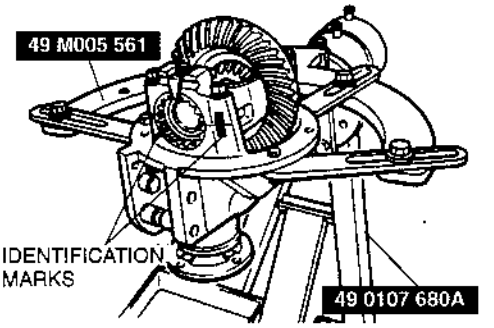

U5U31411

Bearing Caps Disassembly Note

- Mark one bearing cap and the carrier.

Adjusting Nuts Disassembly Note

- Mark one adjusting nut and the carrier.

Knock Pin (Standard) Disassembly Note

- Secure the gear case in a vise and tap out the knock pin toward the ring gear side.

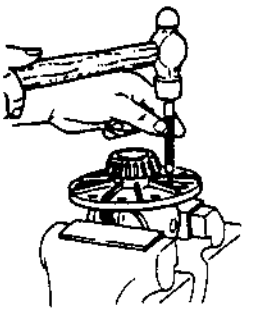

U5U31412

Bearing Inner Races (Side Bearing) Disassembly Note

Note

- Mark the bearings so that they can later be reinstalled in the same position.

- Remove the bearing inner races (side bearing) from the gear case by using the **SST**.

U5U31413

Locknut (Companion Flange) Disassembly Note

- Hold the companion flange by using the **SST** and remove the locknut.

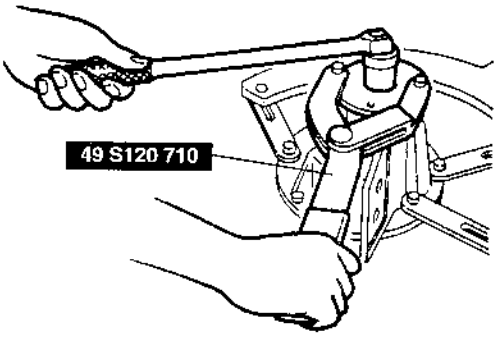

U5U31414

Companion Flange Disassembly Note

- Pull the companion flange off by using the **SST**.

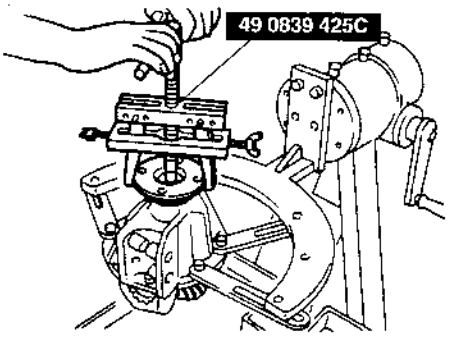

U5U31415

Drive Pinion Disassembly Note

- Push out the drive pinion by attaching a miscellaneous locknut to the drive pinion, and tapping it with a copper hammer.

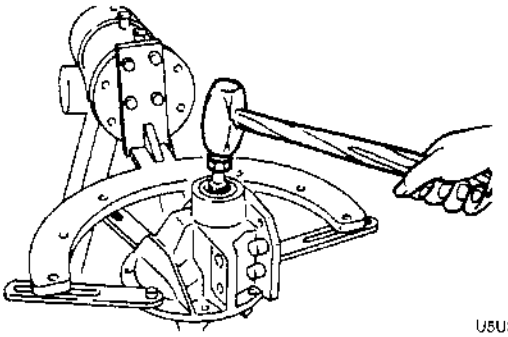

U5U31416

Bearing Outer Races (Front And Rear Bearing) Disassembly Note

- Remove the bearing outer races by using the two grooves in the carrier and alternately tapping the sides of the races.

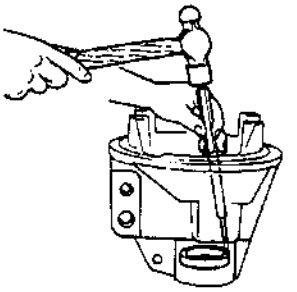

U5U31417

Bearing Inner Race (Rear Bearing) Disassembly Note

- While supporting the drive pinion to keep it from falling, remove the bearing inner race (rear bearing) by using the **SST**.

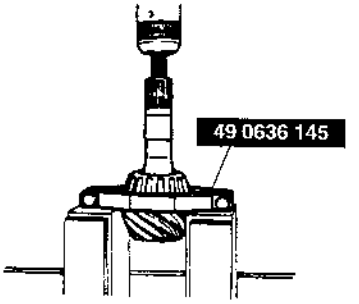

U5U31418

Differential Mount Disassembly Note

1. Drill holes around the differential mount.

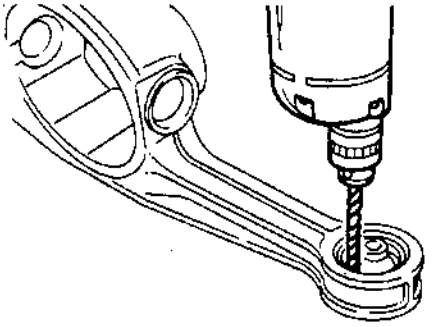

U5U31419

2. Hit the edge of the differential mount to remove it.

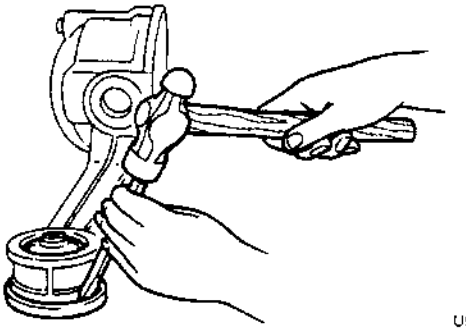

U5U31420

Differential Mount Assembly Note

1. Install the new differential mount with the voids facing front and rear.
2. Press in the differential mount by using the **SST**.

Press force
19,600 N {2,000 kgf, 4,400 lbf} max.

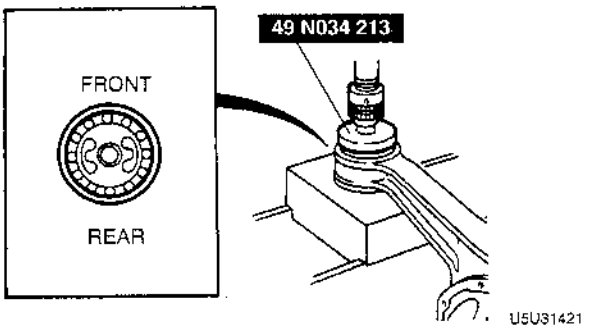

Oil Seal Assembly Note

- Apply differential gear oil to the new oil seal lip and install it by using the **SST**.

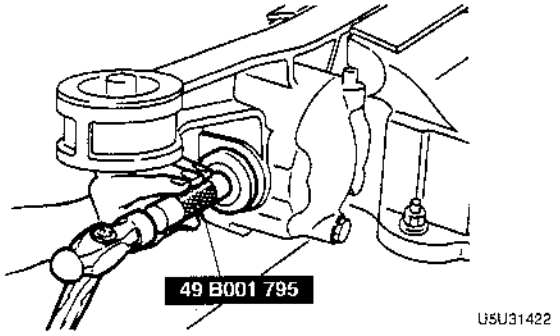

Bearing Outer Race (Front Bearing) Assembly Note

- Install the bearing outer race (front bearing) by using the **SSTs**.

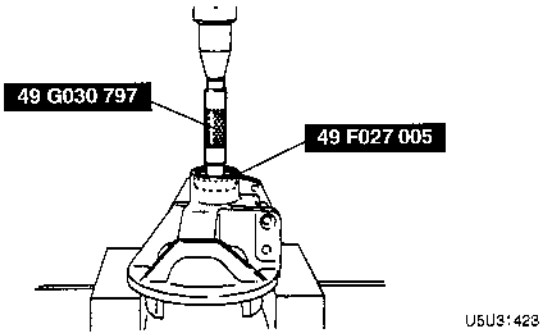

Bearing Outer Race (Rear Bearing) Assembly Note

- Install the bearing outer race (rear bearing) by using the **SSTs**.

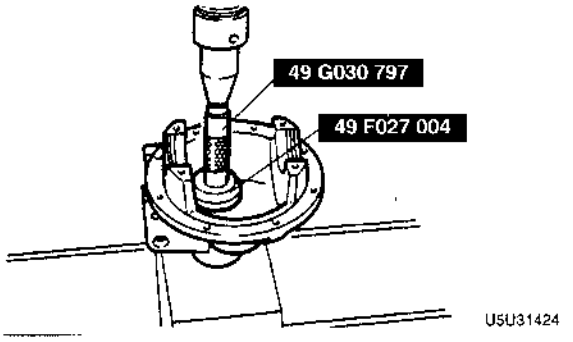

Bearing Inner Race (Rear Bearing), Bearing Inner Race (Front Bearing) Assembly Note

1. Adjust the drive pinion height as follows, by using the **SSTs**.

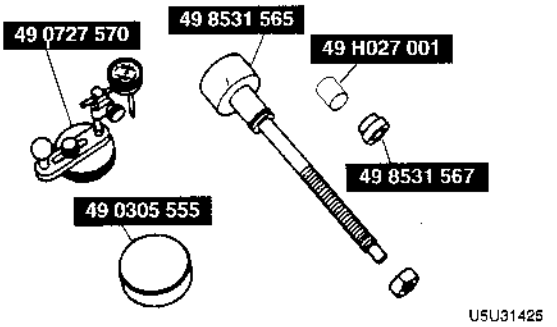

(1) Install the previously-removed spacer onto the **SST** so that the beveled side of the spacer faces the drive pinion. Then install the rear bearing and O-ring onto the **SST**/spacer as shown in the figure.

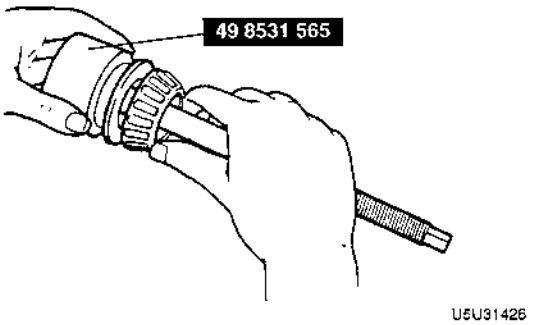

(2) Assemble the spacer, bearing inner race (rear bearing), and **SSTs**.
(3) Secure the **SST** with the O-ring. Install this assembly in the carrier.
(4) Install the bearing inner race (front bearing), the **SST**, companion flange, washer, and nut.

(5) Tighten the nut just enough so that the companion flange can still be turned by hand.

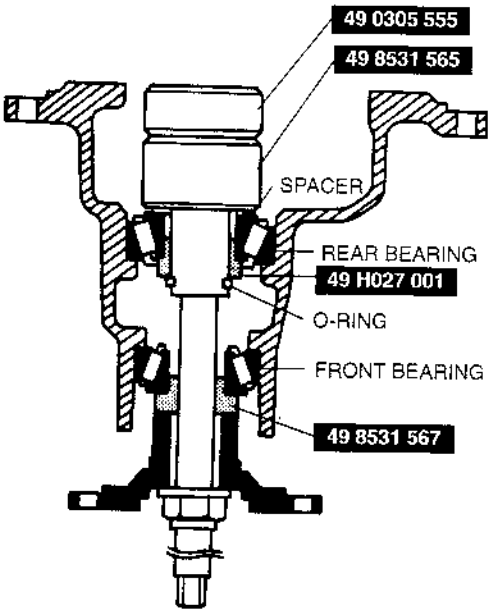

U5U31427

(6) Place the **SST** on the surface plate and set the dial indicator to "Zero".

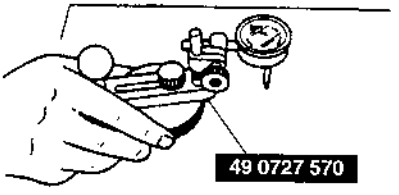

U5U31428

(7) Place the **SST** atop the drive pinion model. Set the gauge body atop the gauge block.
(8) Place the feeler of the dial indicator so that it contacts where the bearing inner race (side bearing) is installed in the carrier. Measure the lowest position on the left and right sides of the carrier.

Note
- The number is inscribed on the end of the drive pinion.

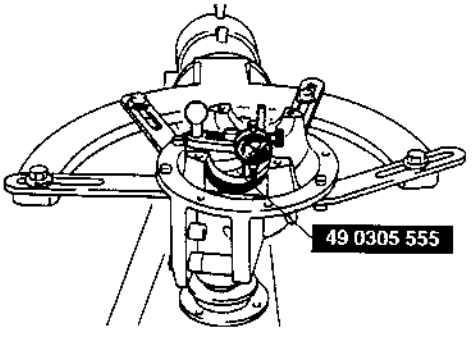

U5U31429

(9) Add the two (left and right) values obtained by the measurements taken in step (8), and then divide the total by 2. From this result, subtract the result obtained by dividing the number inscribed on the end surface of the drive pinion by 100. (If there is no figure inscribed, use 0.) This is the pinion height adjustment value.

Mark	Thickness	Mark	Thickness
08	3.08 mm {0.1213 in}	29	3.29 mm {0.1295 in}
11	3.11 mm {0.1224 in}	32	3.32 mm {0.1307 in}
14	3.14 mm {0.1234 in}	35	3.35 mm {0.1319 in}
17	3.17 mm {0.1248 in}	38	3.38 mm {0.1331 in}
20	3.20 mm {0.1260 in}	41	3.41 mm {0.1343 in}
23	3.23 mm {0.1271 in}	44	3.44 mm {0.1354 in}
26	3.26 mm {0.1283 in}	47	3.47 mm {0.1366 in}

Note
- The identification number is indicated on the outer side of the washer.

2. Install the spacer, selected in the procedure above, with the beveled side facing the drive pinion.
3. Using the **SSTs**, press the bearing inner race (rear bearing) onto the drive pinion until the force required starts to increase sharply.

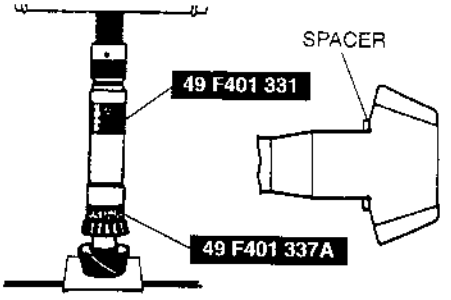

U5U31430

4. Without installing the oil seal, install the drive pinion, spacer, new collapsible spacer, front bearing, washer, and companion flange to the carrier, and temporarily tighten the locknut by using the **SST**.

Tightening torque
128—284 N·m {13—29 kgf·m, 95—209 ft·lbf}

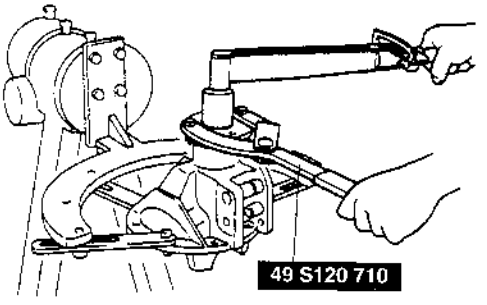

U5U31431

5. Turn the companion flange several turns by hand to seat the bearing.
6. Measure the drive pinion preload. Adjust the preload by tightening the locknut, and record the tightening torque.

Preload
0.9—1.3 N·m {9—14 kgf·cm, 7.9—12.1 in·lbf}
Tightening torque
128—284 N·m {13—29 kgf·m, 95—209 ft·lbf}

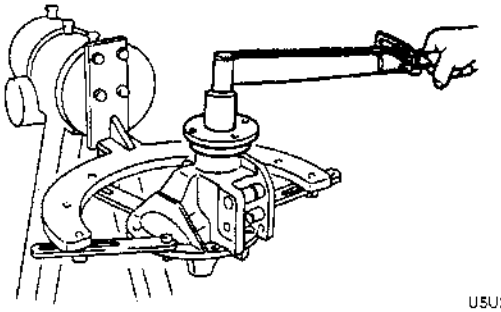
U5U31432

7. Remove the locknut, washer, and companion flange.
8. Tap a new oil seal into the differential carrier with the **SST**.

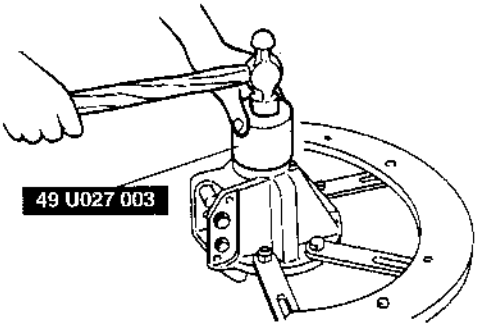

U5U31433

9. Install the companion flange and washer while holding the flange with the **SST**, and tighten a new locknut to the tightening torque recorded in step 6.

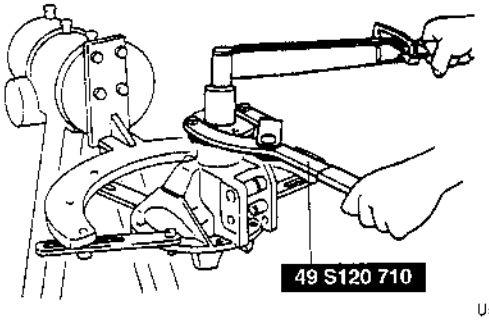

U5U31434

Thrust Washers (Standard) Assembly Note

1. Adjust the backlash of the side gears and pinion gear as follows.
   (1) Set a dial gauge against the pinion gear as shown.
   (2) Secure one of the side gears.
   (3) Move the pinion gear, and measure the backlash at the end of it.

   Standard backlash
   0—0.1 mm {0—0.0039 in}

   (4) If the backlash exceeds the standard, use the selectable thrust washers for adjustment.

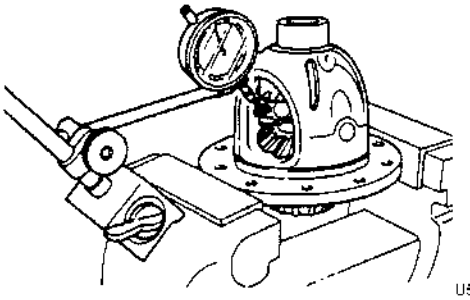
U5U31435

Thrust washer thickness

Identification mark	Thickness
0	2.00 mm {0.0787 in}
0.5	2.05 mm {0.0807 in}
1	2.10 mm {0.0827 in}
1.5	2.15 mm {0.0847 in}
2	2.20 mm {0.0866 in}

2. Install the new knock pin to secure the pinion shaft. Stake the pin with a punch to prevent it from coming out of the case.

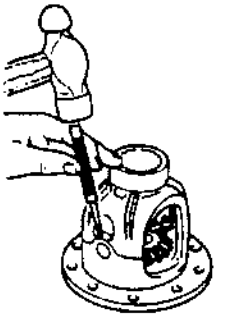
U5U31436

3. Apply thread-locking compound to bolt threads A and points B of the gear back face. Apply approximately **0.04 cm^3 {0.04 cc, 0.0024 cu in}** of thread-locking compound at each point and bolt thread.

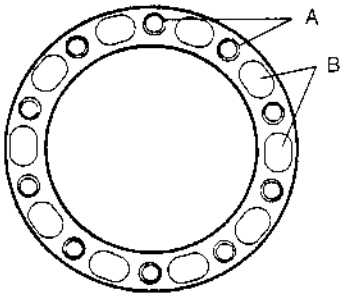

U5U31437

4. Install the ring gear onto the gear case.

Tightening torque
69—83 N·m {7.0—8.5 kgf·m, 51—61 ft·lbf}

5. Press the bearing inner races (side bearing) on by using the **SST**.

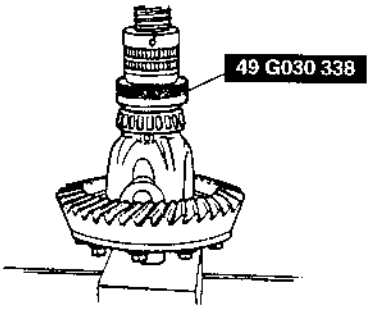

U5U31438

6. Install the differential gear component in the carrier.
7. Note the identification marks on the adjusting nuts, and install them on their respective sides.
8. Install the differential bearing caps, making sure that the identification mark on the cap corresponds with the one on the carrier, by using the **SST**. Then temporarily tighten the bolts.

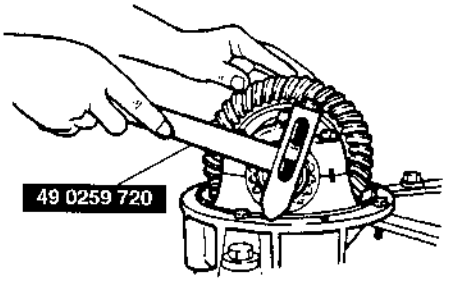

U5U31439

(1) Mark the ring gear at four points at **approx. 90°** intervals. Mount a dial indicator to the carrier so that the feeler comes in contact at a right angle with one of the ring gear teeth.
(2) Turn both bearing adjusters equally by using the **SST** until the backlash is **0.09—0.11 mm {0.0035—0.0043 in}**.
(3) Inspect for the backlash at the three other marked points, and make sure the maximum backlash is less than **0.07 mm {0.0028 in}**.

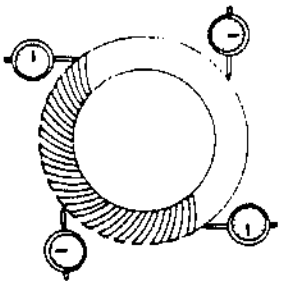

U5U31440

9. Tighten or loosen the adjusting nuts equally until the distance between the pilot sections on the bearing caps is **185.428—185.50 mm {7.3003—7.3031 in}**.
10. Reinspect for the backlash.

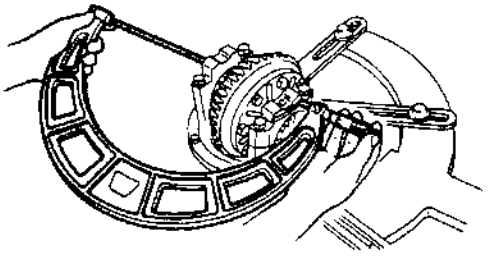

U5U31441

11. Inspect the teeth contact as follows.
    (1) Coat both surfaces of 6—8 teeth of the ring gear with a thin coat of red lead.
    (2) While moving the ring gear back and forth by hand, rotate the drive pinion several times and inspect the tooth contact.
    (3) If the tooth contact is good, wipe off the red lead.
    (4) If it is not good, adjust the pinion height, and then adjust the backlash.

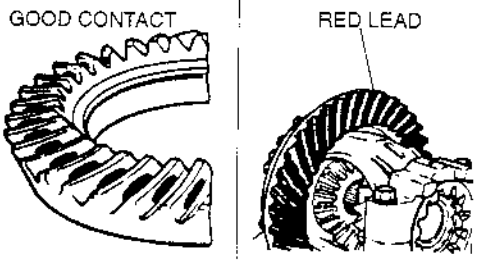

U5U31442

① Inspect the toe and flank contact by replacing the spacer with a thinner one to move the drive pinion outward.
② Inspect the heel and face contact by replacing the spacer with a thicker one to bring the drive pinion in.

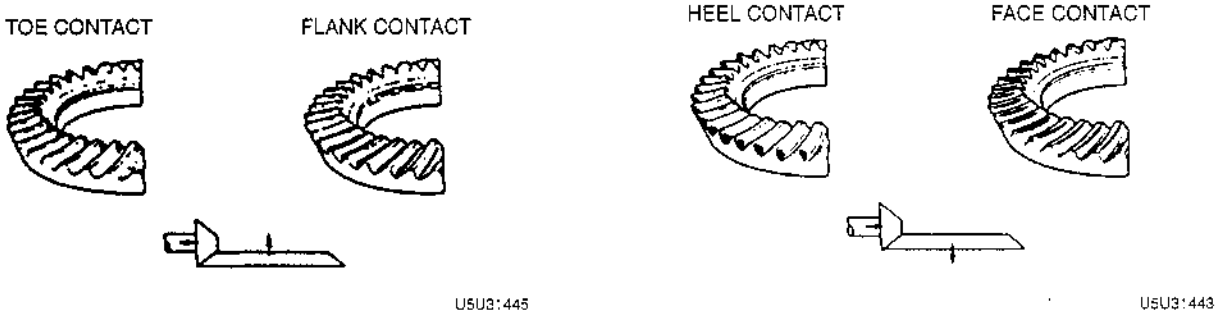
TOE CONTACT
FLANK CONTACT
HEEL CONTACT
FACE CONTACT
U5U3:445
U5U3:443

03–15 PROPELLER SHAFT

PROPELLER SHAFT REMOVAL/INSTALLATION

X5U315W01

1. Remove the presilencer. (Refer to 01–15 EXHAUST SYSTEM REMOVAL/INSTALLATION.)
2. Remove in the order indicated in the table.
3. Install in the reverse order of removal.

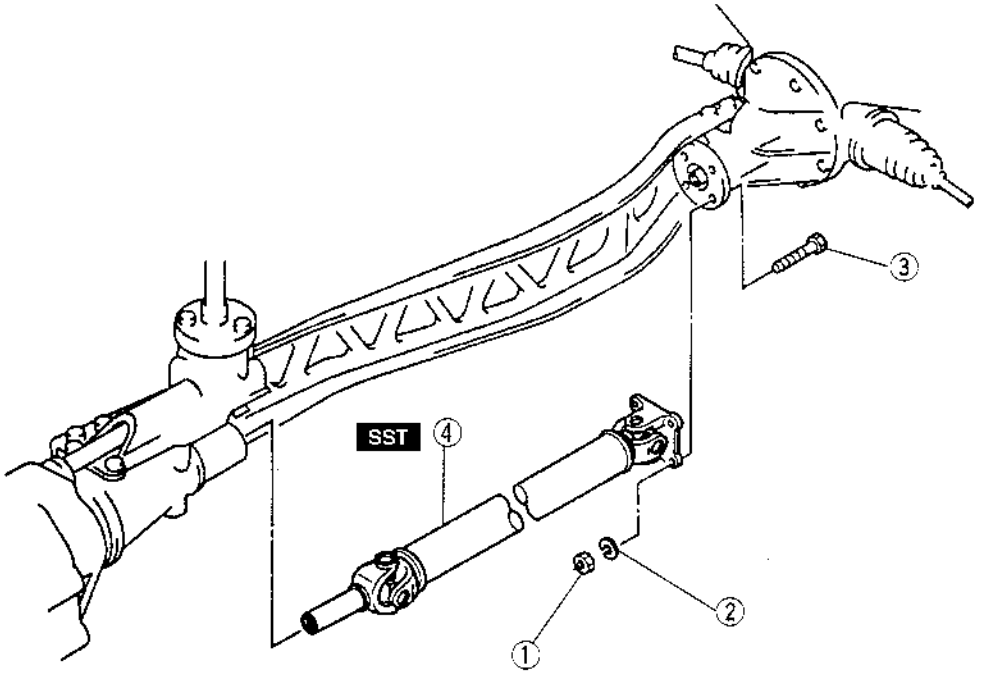

50—58 {5.0—6.0, 37—43}

N·m {kgf·m, ft·lbf}

X5U315WA0

1	Nut
2	Lock washer

3	Bolt
4	Propeller shaft ☞ Removal Note ☞ Installation Note

Propeller Shaft Removal Note

1. Before removing the propeller shaft, mark the flanges for correct installation.

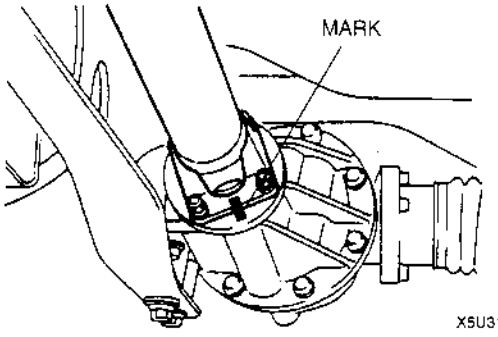

X5U315WA1

2. Remove the propeller shaft from the extension housing, and immediately install the **SST** to prevent oil leakage.

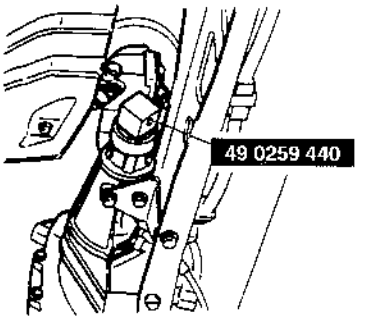

X5U315WA2

Propeller Shaft Installation Note

1. Align the marks made during removal, and install the propeller shaft. If installing a new propeller shaft, align the differential companion flange precast marking with the tag on the propeller shaft.

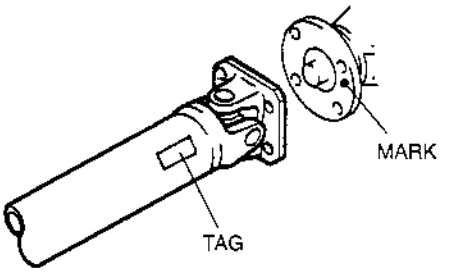

X5U315WA3

Tightening torque
50—58 N·m {5.0—6.0 kgf·m, 37—43 ft·lbf}

2. Verify that there is no abnormal noise or vibration when driving the vehicle. If noise or vibration comes from the propeller shaft, replace the propeller shaft.

PROPELLER SHAFT INSPECTION

Caution

- **Cleaning sealed bearings with cleaning fluids or a steam cleaner can wash the grease out of the bearing.**

1. Clean the propeller shaft (except for the universal joint) with a steam cleaner or solvent.
2. Measure the propeller shaft runout by using a dial indicator. Replace the propeller shaft if runout is excessive.

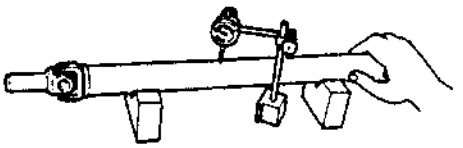

X5U315WA4

Maximum runout
0.4 mm {0.016 in}

X5U315W02

3. Move the universal joints in the directions shown, and check for universal joint looseness. If there is looseness, replace the propeller shaft.

Note

- Starting torque: 0.30—0.98 N·m {3.0—10.0 kgf·cm, 2.6—8.6 in·lbf}

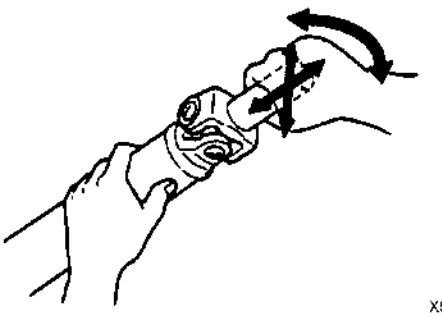

X5U315WA5

4. Inspect for operation of the universal joint. If the universal joint has excessive resistance, replace the propeller shaft.

03–50 TECHNICAL DATA

03 DRIVELINE/AXLE

X5U350W01

Item			Specification
FRONT AND REAR AXLES			
Front axle	Maximum wheel bearing play (mm {in})		0.05 {0.002}
Rear axle	Maximum wheel bearing play (mm {in})		0.05 {0.002}
Drive shaft	Length (Air in boot at atmospheric pressure) (mm {in})		772.6—782.6 {30.42—30.81}
Differential	Pinion height (mm {in})		–0.032—0.032 {–0.001—0.001}
	Backlash of side gear and pinion gear (mm {in})		0—0.1 {0—0.004}
	Drive pinion preload (N·m {kgf·cm, in·lbf})		0.9—1.3 {9—14, 7.9—12.1}
	Backlash of drive pinion and ring gear (mm {in})	Standard	0.09—0.11 {0.0036—0.0043}
		Minimum	0.05 {0.002}
		Allowance variation	0.07 {0.003}
	Oil	Grade	API service GL-5
		Viscosity	Above –18 °C {0 °F}: SAE 90 Below –18 °C {0 °F}: SAE 80
		Capacity (L {US qt, Imp qt})	1.00 {1.06, 0.88}
PROPELLER SHAFT			
Starting torque (N·m {kgf·cm, in·lbf})			0.30—0.98 {3.0—10.0, 2.6—8.6}

03–60 SERVICE TOOLS

03 DRIVELINE/AXLE SST

X5U36CW01

49 F027 007 Attachment ϕ72 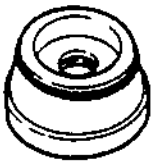 TF027007X	49 V001 795 Oil seal installer 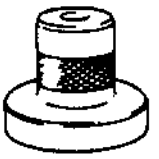 TV001795X	49 T028 3A0 Ball joint puller set 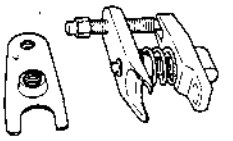 TT0283A0X
49 T028 303 Body (Part of 49 T028 3A0) 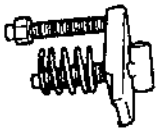 TT028303X	49 T028 304 Attachment (Part of 49 T028 3A0)  TT028304X	49 F026 103 Wheel hub puller 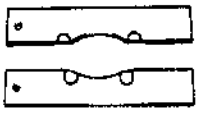 TF026103X
49 B026 1A0 Wheel hub puller 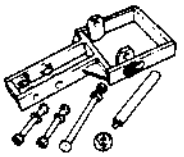 TB0261A0X	49 G033 102 Handle (Part of 49 B026 1A0) 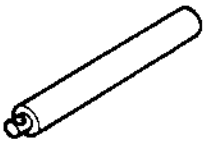 TG033102X	49 G030 727 Attachment A (Part of 49 B026 1A0) 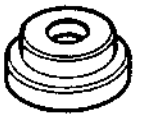 TG030727X
49 G030 795 Oil seal installer 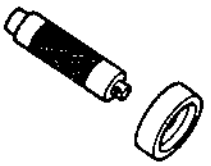 TG030795X	49 G030 797 Handle (Part of 49 G030 795)  TG030797X	49 0636 145 Fan pulley boss puller 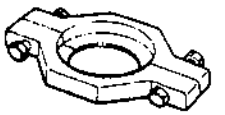 T0636145X
49 G033 107A Dust cover installer 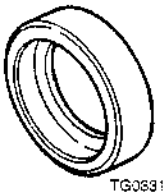 TG033107A	49 F027 0A1 Bearing installer set 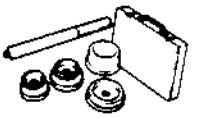 TF0270A1X	49 F027 005 Attachment ϕ62 (Part of 49 F027 0A1) 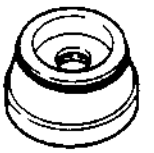 TF027005X
49 F027 009 Attachment ϕ68 & 77 (Part of 49 F027 0A1) 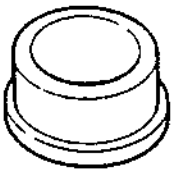 TF027009X	49 B034 201 Support block 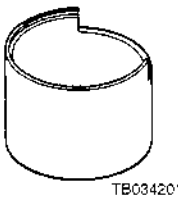 TB034201X	49 D017 2A1 Bearing installer set  TD0172A1X
49 F401 337A Attachment C (Part of 49 D017 2A1) 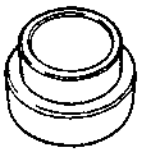 TF401337A	49 F401 331 Body (Part of 49 D017 2A1)  TF401331X	49 G030 338 Attachment E (Part of 49 D017 2A1)  TG030338X

49 S120 710 Coupling flange holder  TS120710X	49 0839 425C Bearing puller set 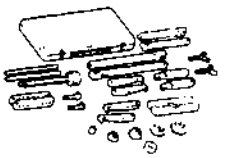 T0839425C	49 0259 440 Main shaft holder 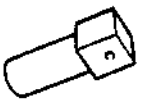 T0259440X
49 U027 003 Oil seal installer 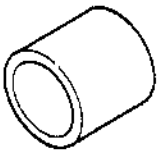 TU027003X	49 0259 720 Differential side bearing adjusting nut wrench 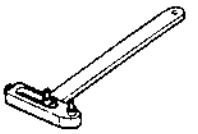 T0259720X	49 0107 680A Engine stand 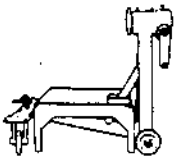 T0107680A
49 M005 561 Differential carrier hanger 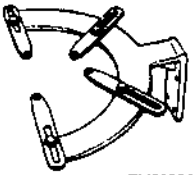 TM005561X	49 N034 213 Rubber bushing installer 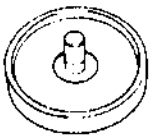 TN034213X	49 B001 795 Oil seal installer 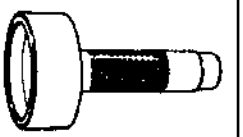 TB001795X
49 F027 004 Attachment ϕ80 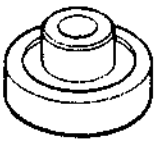 TF027004X	49 F027 005 Attachment ϕ62 (Part of 49 F027 0A1) 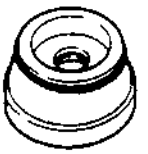 TF027005X	49 F027 0A0 Pinion height adjustment gauge set 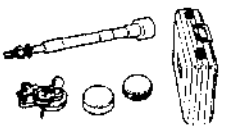 TF0270A0X
49 0727 570 Pinion height gauge body (Part of 49 F027 0A0) 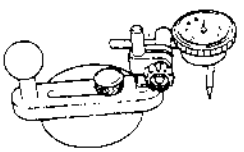 T0727570X	49 8531 565 Pinion model 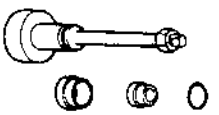 T8531565X	49 8531 567 Collar A (Part of 49 8531 565)  T8531567X
49 H027 001 Collar 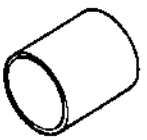 TH027001X	49 0305 555 Gauge block  T0305555X	49 B025 006A Sensor rotor installer 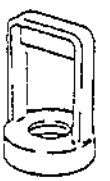 TB025006A

BRAKES

04
SECTION

04–01 TROUBLESHOOTING

FOREWARD

X5U401W01

- Refer to 00–00 GENERAL INFORMATION, Troubleshooting Procedures, and thoroughly read and understand the basic flow of troubleshooting in order to properly perform the procedures.

TROUBLESHOOTING NOTE

X5U401W02

- The ABS is composed of electrical components, a mechanical component (ABS hydraulic unit), and standard system components. Fundamentally, malfunctions of the ABS electrical or mechanical components are judged by the on-board diagnostic program within the ABS control module. Malfunctions are indicated by a warning light on the instrument cluster. The technician can locate a malfunction by switching the system to the diagnostic test mode.
- The on-board diagnostic system must be used when diagnosing the ABS.

PRECAUTION

X5U401W03

Conditions That Are Not ABS Malfunctions

1. Vibrations can sometimes be felt in the steering system, body, and/or brake pedal when the ABS is functioning; such vibrations are simply an indication that the ABS is functioning.
2. The ABS warning light may illuminate under the following conditions:
   (1) When the vehicle is traveling on snow or ice with the parking brake activated or a brake dragging on one wheel.
   (2) When tires of different diameters are used.
   (3) When tires of different gripping performance are used.
   (4) When the vehicle is jacked up or on a chassis roller with the front wheels locked and the rear wheels only are rotated for **20 seconds or more**. The ABS warning light goes off when ignition switch is turned to ON again and the vehicle is driven **faster than 10 km/h {6.2 mph}**. However, diagnostic code 42 (front left wheel-speed sensor) will be entered into the control module memory. Erase it from the memory according to the following procedure:
   ① Activate the on-board diagnostic system and verify diagnostic trouble codes. (Refer to 04–01 ANTILOCK BRAKE SYSTEM ON-BOARD DIAGNOSIS.)
   ② If only code 42 is memorized, erase it. If code 42 and other codes are memorized, verify the causes by referring to the applicable diagnostic chart for the other codes. (Refer to 04–01 ANTILOCK BRAKE SYSTEM ON-BOARD DIAGNOSIS.)
3. When battery voltage is **below approx. 10 V**, the warning light will illuminate and the ABS will not work. In this condition, at the moment battery voltage increases to **more than approx. 10 V**, the warning light will go off and the system will return to normal control. However, diagnostic code 63 will be entered into the control module memory if vehicle speed is **faster than 6 km/h {4 mph}** when battery voltage is **below 10 V**.

ANTILOCK BRAKE SYSTEM ON-BOARD DIAGNOSIS

X5U401W04

On-Board Diagnostic (OBD) Test Description

- The OBD test inspects the integrity and function of the ABS and outputs the test results when requested by the NGS tester. If also provides a quick end inspection of the ABS, is usually performed at the start of each diagnostic procedure with all accessories off and is performed at end of most troubleshooting tests for verification of repair and make sure no other faults were incurred while servicing a previous fault.

On-Board Diagnostic Test
New generation star (NGS) tester hook-up procedure

Note
- Make sure that ignition switch is at OFF.

1. Insert the vehicle interface module and program card into the **SST** (NGS tester) control unit.
2. Plug the NGS OBDII adapter into the interface module and the connector into the vehicle data link connector (DLC) located in the engine compartment via the SUPER MECS adapter.
3. Plug the **SST** (NGS tester) power cable into the cigarette lighter or use a battery hook-up adapter.
4. Listen for a double beep. The **SST** (NGS tester) is now initialized.

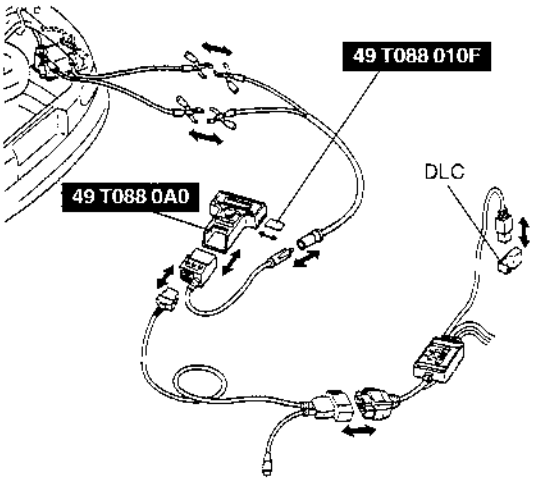

X5U401WA0

5. Set the **SST** (SUPER MECS adapter) to ABS.

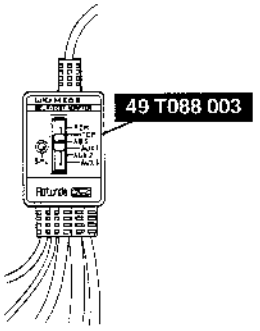

U5U40102

Reading DTCs Procedure

Note

- When reading DTCs by using the NGS, the ABS warning light also indicates DTCs by flashing.
- In case the OBD test is performed in the following conditions or NGS tester isn't operated properly, NO CODES RECEIVED may be indicated even if the ABS control module sends any DTCs.
  1. Open or short circuit in wiring harness connected with the terminals FBS or TBS of the data link connector.
  2. Poor positive battery voltage.

1. Perform the necessary vehicle preparation and visual inspection. Hook-up the **SST** (NGS tester) to the vehicle.

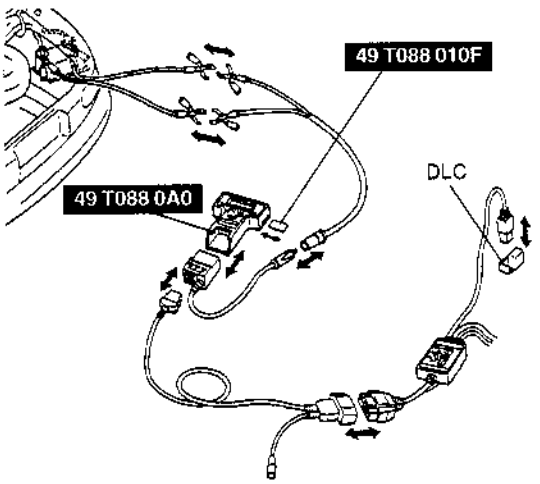

X5U401WA0

2. Move the cursor to **VEHICLE AND ENGINE SELECTION.**

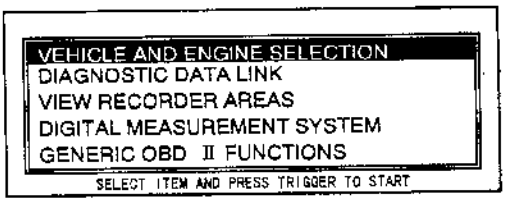

W6U401WA3

3. Move the cursor to **SELECT NEW VEHICLE YEAR & MODEL**. Press the trigger key to enter this selection.

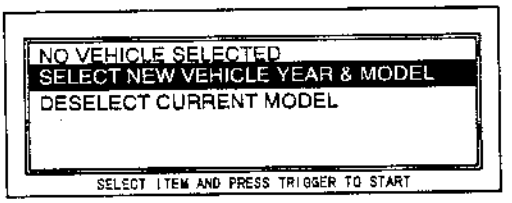

W6U401WA4

4. Move the cursor to **1999 — VIN #10:X**. Press the trigger key to enter this selection.

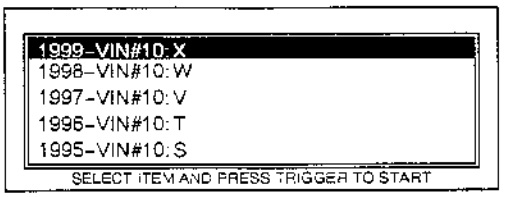

X5U401WA1

5. Move the cursor to appropriate model. Press the trigger key to enter this selection.
6. The vehicle selection screen showing the selected vehicle will be displayed. Move the cursor to the vehicle selected. Press the trigger key.
7. Move the cursor to **DIAGNOSTIC DATA LINK** in the main menu screen. Press the trigger key to enter into menu system diagnostics.

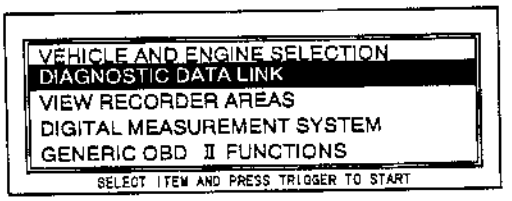

W6U401WA6

8. Move the cursor to **ABS-ANTI LOCK BRAKE MODULE**. Press the trigger.

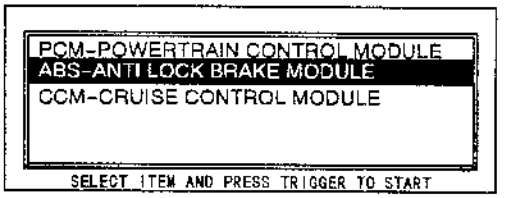

X5U401WA2

9. Move the cursor to **DIAGNOSTIC TEST MODES**. Press the trigger key to enter this selection.

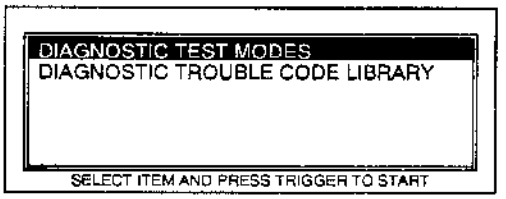

X5U401WA3

10. Press START. Follow operating instruction from the menu.
11. If the system is normal, **NO CODES RECEIVED** will be indicated. If any DTC is indicated, follow the appropriate DTC troubleshooting chart.
12. After completion of repairs, clear DTCs.

Clearing DTCs Procedure

Caution

- **Connecting the wrong data link connector terminals may possibly cause a malfunction. Carefully connect the specified terminals only.**

1. Connect the TBS terminal to GND at the data link connector.

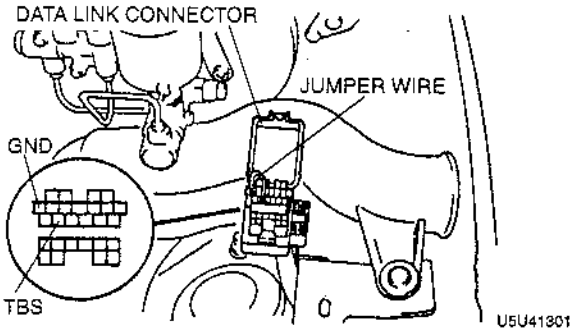

2. Turn the ignition switch to ON.
3. Output all memorized codes. (ABS warning light flashing)
4. After verifying that the first code is repeated, depress the brake pedal 10 times at intervals of less than **one second (1 sec.)**.
   Diagnostic trouble codes cannot be cleared if the following occur.
   (1) If intervals of depressing the brake pedal exceed **one second (1 sec.)**
   (2) Brake switch has failed
5. Turn the ignition switch to OFF to finish the procedure.

Note

- After repairing the ABS wheel-speed sensor or pump motor, the ABS warning light may not go off when ignition is switched to ON. In this case, turn the ignition switch to OFF, then back ON, and drive the vehicle at a speed of more than **10 km/h {6.2 mph}** then the ABS warning light goes off.

Diagnostic Trouble Code Table

DTC	Display on the NGS	Possible cause
05	BRAKE SW — OPEN OR SHORT	Harness between brake switch to ABS CM
11	WSS, SR (RF) — OPEN OR SHORT	Right front wheel-speed sensor
12	WSS, SR (LF) — OPEN OR SHORT	Left front wheel-speed sensor
13	WSS, SR (RR) — OPEN OR SHORT	Right rear wheel-speed sensor
14	WSS, SR (LR) — OPEN OR SHORT	Left rear wheel-speed sensor
15	WSS, SR — OPEN OR SHORT	Wheel-speed sensor/sensor rotor
22	HU/SOL.V (RF)/SOL.V (RF) AV — OPEN OR SHORT	Right front solenoid valve (pressure retention)
23	SOLENOID VALVE (RF) EV — OPEN OR SHORT	Right front solenoid valve (pressure reduction)
24	SOL.V (LF)/(LF) AV — OPEN OR SHORT	Left front solenoid valve (pressure retention)
25	SOLENOID VALVE (LF) EV — OPEN OR SHORT	Left front solenoid valve (pressure reduction)
26	SOL.V (RR)/(R) AV/(RR) AV — OPEN OR SHORT	Rear solenoid valve (pressure retention)
27	SOL.V (R) EV/(RR) EV — OPEN OR SHORT	Rear solenoid valve (pressure reduction)
41	WSS, SR (RF) — OPEN OR SHORT	Right front wheel-speed sensor/sensor rotor
42	WSS, SR (LF) — OPEN OR SHORT	Left front wheel-speed sensor/sensor rotor
43	WSS, SR (RR) — OPEN OR SHORT	Right rear wheel-speed sensor/sensor rotor
44	WSS, SR (LR) — OPEN OR SHORT	Left rear wheel-speed sensor/sensor rotor
51	FAIL SAFE RELAY — OPEN OR SHORT	Valve relay
53	MOTOR, MOTOR RELAY — OPEN OR SHORT	Motor relay Motor
61	ABS/TCS CONTROL UNIT — DEFECT	ABS control module
63	POWER SUPPLY — MALFUNCTION	Power supply

Diagnostic Trouble Code Troubleshooting

Caution

- **When attaching the tester lead to the terminal of the ABS CM harness connector, the SST must be used. (Refer to 04–13 ABS HARNESS AND INPUT SIGNAL INSPECTION.)**

DTC 05	Brake switch		
DESCRIPTION	When open circuit is detected in following harnesses. • Brake switch — ABS CM • ABS CM — brake light		
POSSIBLE CAUSE	• Malfunction of related wiring harness		
STEP	INSPECTION		ACTION
1	Inspect following harness for open circuit. • Brake switch — ABS CM • ABS CM — brake light Is harness normal?	Yes	Go to next step.
		No	Repair harness.
2	Erase diagnostic trouble code, and reinspect for diagnostic trouble codes. Is diagnostic trouble code 05 obtained?	Yes	Replace ABS CM.
		No	There was a temporarily poor contact in wiring harness or connector.

DTC	11 12 13 14	Right front ABS wheel-speed sensor Left front ABS wheel-speed sensor Right rear ABS wheel-speed sensor Left rear ABS wheel-speed sensor	
DESCRIPTION	When open circuit or short to power supply is detected.		
POSSIBLE CAUSE	• Malfunction of ABS wheel-speed sensor • Malfunction of related wiring harness		
STEP	INSPECTION		ACTION
1	Is ABS CM connector connected properly?	Yes	Go to next step.
		No	Correct as necessary.
2	Is wiring harness between ABS CM and wheel-speed sensor okay?	Yes	Go to next step.
		No	Correct as necessary.
3	Is ABS wheel-speed sensor okay? ☞ 04–13 FRONT ABS WHEEL-SPEED SENSOR INSPECTION	Yes	Go to next step.
		No	Replace ABS wheel-speed sensor.
4	Erase diagnostic trouble code, and reinspect for diagnostic trouble codes after driving over 10 km/h {6.2 mph}. Are diagnostic trouble codes 11—14 obtained?	Yes	Replace ABS CM.
		No	There was a temporarily poor contact in wiring harness or connector.

DTC 15	ABS wheel-speed sensor, ABS sensor rotor	
DESCRIPTION	Disagreement of wheel speed and vehicle speed is detected.	
POSSIBLE CAUSE	• There are missing or damaged teeth on sensor rotor • ABS wheel-speed sensor improperly installed • HU inoperable due to low pressure • Different size tires are used	
STEP	INSPECTION	ACTION
1	Inspect each of the four sensors in the same procedures as step 3—7 of DTC 41—44 chart.	

DTC	22	**Right front pressure reduction valve**
	23	**Right front pressure retension valve**
	24	**Left front pressure reduction valve**
	25	**Left front pressure retension valve**
	26	**Rear pressure reduction valve**
	27	**Rear pressure retension valve**
DESCRIPTION	Solenoid monitor signal does not track in response to solenoid ON/OFF command.	
POSSIBLE CAUSE	• Malfunction of solenoid valve • Malfunction of related wiring harness	

STEP	INSPECTION		ACTION
1	Is ABS CM connector connected properly?	Yes	Go to next step.
		No	Correct as necessary.
2	Inspect solenoid valve including valve relay. Is it okay? ☞ 04–13 ABS HYDRAULIC UNIT INSPECTION, Solenoid Valve Inspection Including the Valve Relay	Yes	Go to step 5.
		No	Go to next step.
3	Is solenoid valve okay? ☞ 04–13 ABS HYDRAULIC UNIT INSPECTION, Solenoid Valve Inspection	Yes	Go to next step.
		No	Replace ABS hydraulic unit.
4	Is harness between solenoid valve and ABS CM okay?	Yes	Go to next step.
		No	Repair harness.
5	Erase diagnostic trouble code, and reinspect for diagnostic trouble codes. Are diagnostic trouble codes 22—27 obtained?	Yes	Replace ABS CM.
		No	There was a temporarily poor contact in wiring harness or connector.

DTC	41	**Right front ABS wheel-speed sensor**
	42	**Left front ABS wheel-speed sensor**
	43	**Right rear ABS wheel-speed sensor**
	44	**Left rear ABS wheel-speed sensor**
DESCRIPTION	Circuit shorted to ground is detected. Wheel speed changes to **0 km/h {0 mph}** instantaneously while vehicle speed is **40 km/h {25 mph}** or more. Disagreement with other sensors is detedted. Circuit shorted to ground is detected.	
POSSIBLE CAUSE	• Malfunction of ABS wheel-speed sensor, sensor rotor, or ABS hydraulic unit • Malfunction of related wiring harness	

STEP	INSPECTION		ACTION
1	Is ABS CM connector connected properly?	Yes	Go to next step.
		No	Correct as necessary.
2	Inspect harness between ABS CM and ABS wheel-speed sensor for circuit shorted to ground. Is harness okay?	Yes	Go to next step.
		No	Repair or replace harness.
3	Is ABS wheel-speed sensor okay? ☞ 04–13 FRONT ABS WHEEL-SPEED SENSOR INSPECTION	Yes	Go to next step.
		No	Replace ABS wheel-speed sensor.
4	Are there missing or damaged teeth on sensor rotor?	Yes	Replace sensor rotor.
		No	Go to next step.
5	Is brake line okay?	Yes	Go to next step.
		No	Replace brake line.
6	Is ABS hydraulic unit okay? ☞ 04–13 ABS HYDRAULIC UNIT INSPECTION	Yes	Go to next step.
		No	Replace ABS hydraulic unit.
7	Erase diagnostic trouble code, and reinspect for diagnostic trouble codes after driving over **10 km/h {6.2 mph}**. Are diagnostic trouble codes 41—44 obtained?	Yes	Replace ABS CM.
		No	There was a temporarily poor contact in wiring harness or connector.

DTC 51	Valve relay		
DESCRIPTION	Four or more valve systems are detected to be faulty among six systems.		
POSSIBLE CAUSE	• Malfunction of valve relay • Malfunction of related wiring harness		
STEP	INSPECTION		ACTION
1	Is ABS fuse (20 A) okay?	Yes	Go to next step.
		No	Replace fuse.
2	Inspect valve relay including harness. Is it okay? ☞ 04–13 ABS RELAY INSPECTION, Valve Relay Inspection (Including Harness to ABS Control Module)	Yes	Go to step 4.
		No	Go to next step.
3	Is valve relay okay? ☞ 04–13 ABS RELAY INSPECTION, Valve Relay Inspection	Yes	Go to next step.
		No	Replace valve relay.
4	Erase diagnostic trouble code, and reinspect for diagnostic trouble codes. Is diagnostic trouble code 51 obtained?	Yes	Replace ABS CM.
		No	There was a temporarily poor contact in wiring harness or connector.

DTC 53	ABS motor, motor relay		
DESCRIPTION	Motor monitor signal does not track in response to motor relay ON/OFF command.		
POSSIBLE CAUSE	• Malfunction of ABS motor or motor relay • Malfunction of related wiring harness		
STEP	INSPECTION		ACTION
1	With IG SW OFF, is motor operating?	Yes	Replace motor relay.
		No	Go to next step.
2	Is fusible link located main fuse block okay?	Yes	Go to next step.
		No	Replace fusible link.
3	Inspect motor relay including harness. Is it okay? ☞ 04–13 ABS RELAY INSPECTION, Motor Relay Inspection (Including Harness to ABS Control Module)	Yes	Go to step 7.
		No	Go to next step.
4	Is motor relay okay? ☞ 04–13 ABS RELAY INSPECTION, Motor Relay Inspection	Yes	Go to next step.
		No	Replace motor relay.
5	Inspect ABS motor, including harness. Is it okay? ☞ 04–13 ABS HYDRAULIC UNIT INSPECTION, ABS Motor Inspection (Including Harness to ABS Control Module)	Yes	Go to step 7.
		No	Go to next step.
6	Is ABS motor okay? ☞ 04–13 ABS HYDRAULIC UNIT INSPECTION, ABS Motor Inspection	Yes	Correct harness as necessary.
		No	Replace ABS hydraulic unit.
7	Erase diagnostic trouble code, and reinspect for diagnostic trouble codes. Is diagnostic trouble code 53 obtained?	Yes	Replace ABS CM.
		No	There was a temporarily poor contact in wiring harness or connector.

DTC 61	ABS control module		
DESCRIPTION	The on-board diagnostic program detects ABS CM malfunction.		
POSSIBLE CAUSE	• Malfunction of ABS control module		
STEP	INSPECTION		ACTION
1	Erase diagnostic trouble code, and reinspect for diagnostic trouble code. Is diagnostic trouble code 61 obtained?	Yes	Replace ABS CM.
		No	There was a temporarily poor contact in wiring harness or connector.

DTC 63	Power supply, ground		
DESCRIPTION	Voltage sensor detects low voltage.		
POSSIBLE CAUSE	• Trouble in harness between ground and ABS CM • Trouble in harness between battery and ABS CM • Depleted battery		
STEP	INSPECTION		ACTION
1	Is battery terminal voltage okay? ☞ 01–17 BATTERY INSPECTION, Battery	Yes	Go to next step.
		No	Charge or replace battery.
2	Is battery terminal connection okay?	Yes	Go to next step.
		No	Tighten the battery terminal.
3	Inspect for connection of A terminal (power supply) and AB terminal (ground) connector pins for ABS CM. Is it okay?	Yes	Go to next step.
		No	Repair ABS CM connector.
4	Is voltage of ABS CM harness between A terminal (power supply) and AB terminal (ground) 10—15 V when starting engine?	Yes	Go to next step.
		No	Repair power supply harness or ground harness.
5	Erase diagnostic trouble code, and reinspect for diagnostic trouble codes after driving over **6 km/h {3.7 mph}**. Is diagnostic trouble code 63 obtained?	Yes	Replace ABS CM.
		No	There was temporarily low battery voltage and battery capacity should be inspected if this occurs frequently.

ANTILOCK BRAKE SYSTEM SYMPTOM TROUBLESHOOTING

X5U401W05

Diagnostic Index

- Use the following table to determine the problem and go to the appropriate troubleshooting procedure.

No.	TROUBLESHOOTING ITEM
1	IG switch is turned to ON, but ABS warning light does not illuminate.
2	IG switch is turned to ON, and ABS warning light stays on after more than 4 seconds.
3	ABS warning light flashes with vehicle stopped and ABS warning light goes off when vehicle is driven.
4	ABS warning light goes on during driving and stays on until IG switch is turned off. If IG switch is turned to ON again, ABS warning light goes off after 2—4 seconds.
5	ABS warning light goes on and off intermittently, regardless of driving and stopping.
6	ABS warning light indicates normal; however, ABS does not operate correctly.

Symptom Troubleshooting

Caution

- **Disconnecting and connecting the ABS CM connector must be done with the ignition switch off.**
- **When attaching the tester lead to the harness connector terminal, the SST must be used.**
- **Reinspect for the diagnostic trouble codes and repair as necessary after completion.**

Note

- If any symptoms have appeared in the past and are normal at present, a possible cause is a temporarily poor contact in the wiring harness or connector. **The ABS CM is normal.**

1	**IG switch is turned to ON, but ABS warning light does not illuminate.**		
TROUBLESHOOTING HINTS • Burnt out bulb or short in related harness • Meter malfunction • ABS CM malfunction			
STEP	**INSPECTION**		**ACTION**
1	Do other warning and indicator lights illuminate when IG switch is turned to ON?	Yes	Verify DTC to see if it is stored and repair it later. Go to next step.
		No	Inspect meter fuse. If fuse is melted, inspect for short to ground between fuse panel and warning light.
2	Disconnect ABS CM connector. Turn IG switch to ON. Does ABS warning light illuminate?	Yes	Go to next step.
		No	Go to step 5.
3	Connect ABS CM connector. Turn IG switch to ON. Does ABS warning light illuminate?	Yes	There was a temporarily poor connection between ABS CM and ABS CM connector. Inspect ABS CM connector terminal and ABS CM terminal.
		No	Go to next step.
4	Is ABS CM connector terminal AD deformed?	Yes	Replace harness connector.
		No	Replace ABS CM.
5	With ABS CM connector disconnected, ground ABS CM connector terminal AD. Does ABS warning light illuminate?	Yes	Go to next step.
		No	Go to step 7.
6	With ABS CM connector disconnected, inspect for continuity between ABS CM connector terminal AC and body GND. Is continuity okay?	Yes	Inspect ABS CM connector terminals AC and AD. If there is a malfunction, replace harness connector.
		No	Repair or replace harness.
7	Is ABS warning light bulb burnt out?	Yes	Replace bulb.
		No	Go to next step.
8	Inspect for continuity between ABS CM connector terminal AD and meter connector. Is continuity okay?	Yes	Inspect meter. ☞ 09–22 INSTRUMENTATION/DRIVER INFO., Instrument Cluster Inspection
		No	Repair or replace harness.

2	IG switch is turned to ON, and ABS warning light stays on after more than 4 seconds.		
TROUBLESHOOTING HINTS • ABS CM detects a malfunction in ABS • Low battery voltage at ABS CM terminal • Poor connection in ABS CM connector • ABS warning light harness malfunction (short to ground)			
STEP	**INSPECTION**		**ACTION**
1	Is ABS CM connector connected to ABS CM securely?	Yes	Go to step 3.
		No	Connect it securely. Go to next step.
2	Turn IG switch to ON. Does ABS warning light go off after 4 seconds?	Yes	There was temporary poor connection in wiring harness or connector. Inspect wiring harness and connector terminal and repair as necessary.
		No	Go to next step.
3	Perform diagnostic trouble code inspection and verify DTCs. Is DTC displayed?	Yes	Read DTC and follow diagnostic trouble code troubleshooting.
		No	Go to next step.
4	Is battery voltage okay? ☞ 01–17 BATTERY INSPECTION, Battery	Yes	Make sure battery terminal connection is okay. Go to next step.
		No	Charge or replace battery. ☞ 01–17 BATTERY CHARGING ☞ 01–17 BATTERY REMOVAL/INSTALLATION
5	With engine idling, A/C on, and headlights on, is battery voltage okay? ☞ 01–17 BATTERY INSPECTION, Battery	Yes	Go to next step.
		No	Inspect generator and generator drive belt tension. Adjust generator drive belt tension and/or replace generator as necessary.
6	Disconnect ABS CM connector. Connect **SST** (49 F066 002) to ABS CM connector and turn IG switch to ON. Does ABS warning light go off?	Yes	Replace ABS CM.
		No	Repair short circuit between ABS CM connector terminal AD and ABS warning light.

3	ABS warning light flashes with vehicle stopped and ABS warning light goes off when vehicle is driven.		
TROUBLESHOOTING HINTS • Low battery voltage at ABS CM terminal			
STEP	**INSPECTION**		**ACTION**
1	Perform diagnostic trouble code inspection and verify DTCs. Is DTC displayed?	Yes	Read DTC and follow diagnostic trouble code troubleshooting.
		No	Go to next step.
2	Is battery voltage okay? ☞ 01–17 BATTERY INSPECTION, Battery	Yes	Make sure battery terminal connection is okay. Go to next step.
		No	Charge or replace battery.
3	With engine idling, A/C on and headlights on, is battery voltage okay?	Yes	Replace ABS CM.
		No	Inspect generator and generator drive belt tension. Adjust generator drive belt tension and/or replace generator as necessary.

4	**ABS warning light goes on during driving and stays on until IG switch is turned off. If IG switch is turned to ON again, ABS warning light goes off after 2—4 seconds.**		
TROUBLESHOOTING HINTS • ABS CM detects a malfunction in ABS			
STEP	**INSPECTION**		**ACTION**
1	Perform diagnostic trouble code inspection and verify DTCs. Is DTC displayed?	Yes	Read DTC and follow diagnostic trouble code troubleshooting.
		No	Go to next step.
2	Verify that ABS CM connector is correctly connected. Drive vehicle and reinspect for symptom. Does same symptom reoccur?	Yes	Go to next step.
		No	There was a temporarily poor connection in wiring harness or connector. Inspect wiring harness and connector terminal between ABS CM connector and ABS CM.
3	Perform diagnostic trouble code inspection and verify DTCs. Is DTC displayed?	Yes	Read DTC and follow diagnostic trouble code troubleshooting.
		No	Replace ABS CM.

5	**ABS warning light goes on and off intermittently, regardless of driving and stopping.**		
TROUBLESHOOTING HINTS • ABS warning light harness malfunction (short to ground) • Meter malfunction			
STEP	**INSPECTION**		**ACTION**
1	Perform diagnostic trouble code inspection and verify DTCs. Is DTC displayed?	Yes	Read DTC and follow diagnostic trouble code troubleshooting.
		No	Inspect wiring harness and connector between ABS warning light and ABS CM connector terminal AD.

6	**ABS warning light indicates normal; however, ABS does not operate correctly.**		
TROUBLESHOOTING HINTS • Mechanical system malfunction			
STEP	**INSPECTION**		**ACTION**
1	Perform diagnostic trouble code inspection and verify DTCs. Is DTC displayed?	Yes	Read DTC and follow diagnostic trouble code troubleshooting.
		No	Go to next step.
2	Perform ABS hydraulic unit system inspection. ☞ 04–13 ABS HYDRAULIC UNIT INSPECTION, System Inspection Do wheels rotate properly?	Yes	Inspect conventional brake system.
		No	**If wheels do not rotate:** Replace ABS hydraulic unit. **If wheels rotate but their rotation order is not correct:** Inspect brake pipe routing to ABS hydraulic unit.

04–10 GENERAL PROCEDURES

PRECAUTION (BRAKES)

X5U410W01

Wheels and tires removal/installation

- The removal and installation procedures for the wheels and tires are not mentioned in this section. When a wheel is removed, tighten it to **89—117 N·m {9.0—12.0 kgf·m, 66—86 ft·lbf}**.

Brake lines disconnection/connection

Caution

- **Brake fluid will damage painted surfaces. If brake fluid does get on a painted surface, wipe it off immediately.**

- Tighten the brake pipe flare nut by using the **SST** (49 0259 770B). Be sure to modify the brake pipe flare nut tightening torque to allow for use of a torque wrench-**SST** combination. (Refer to 00–00 FUNDAMENTAL PROCEDURES, Torque Formulas.)
- If any brake line has been disconnected anytime during the procedure, add brake fluid, bleed the brakes, and inspect for leakage after the procedure has been completed.

Connectors disconnection

- Disconnect the negative battery cable before doing any work that requires handling of connectors. Reconnect the negative battery cable only after the work is completed.

ABS components operations

- Make sure that there are no diagnostic trouble codes in the ABS memory after working on ABS components. If there are any codes in the memory, erase them.

04–11 CONVENTIONAL BRAKE SYSTEM

AIR BLEEDING

Note

- The brakes should be bled whenever a brake line is disconnected. If a hydraulic line is disconnected at the master cylinder, start at the brake caliper or wheel cylinder farthest from the brake master cylinder, and move to the next farthest brake caliper or wheel cylinder until all four have been bled. If the disconnection point is anywhere except the master cylinder, start at the point closest to the disconnection, and move to the next closest brake caliper or wheel cylinder until all four have been bled.

1. On level ground, jack up the vehicle and support it evenly on safety stands.
2. Remove the bleeder cap and attach a vinyl tube to the bleeder screw.
3. Place the other end of the vinyl tube in a clear, brake fluid-filled container.
4. The first person depresses the brake pedal several times, and then holds it in the depressed position.
5. The second person loosens the bleeder screw, drains out the fluid and closes the screw by using the **SST**.

W6U411W01

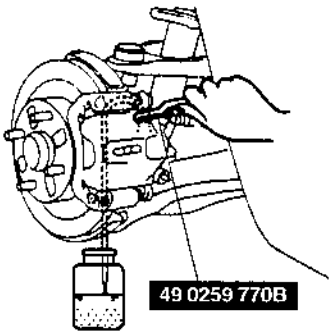

X5U411WA0

6. Repeat step 4 and 5 until no air bubbles are seen. The reservoir should be kept about 3/4 full during bleeding to prevent air from reentering the lines.

   Tightening torque
   5.9—8.8 N·m {60—90 kgf·cm, 53—78 in·lbf}

7. Inspect for correct brake operation.
8. Verify that there is no fluid leakage. Wipe off any spilled fluid immediately.
9. After bleeding the brakes, add brake fluid to the maximum level.

VACUUM LINE INSPECTION

W6U411W02

1. Remove the clamps and vacuum hose.
2. Apply both suction and pressure to the engine-side hose, and verify that air blows only toward that side. If air flows in both directions or not at all, replace the vacuum hose.

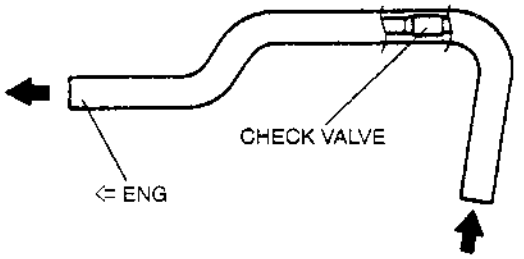

W6U411WA1

BRAKE PEDAL INSPECTION

X5U411W01

Brake Pedal Height Inspection

- Verify that the distance from the center of the upper surface of the pedal pad to the carpet is as specified.

Pedal height (reference value)
171—181 mm {6.73—7.13 in} (With carpet)

Brake Pedal Play Inspection

1. Depress the pedal a few times to eliminate the vacuum in the system.
2. Lightly depress the pedal by hand until resistance is felt, and inspect for the free play.

Free play
4.0—8.4 mm {0.16—0.33 in}

Brake Pedal-to-Floor Clearance Inspection

1. Verify that the distance from the floor panel to the center of the upper surface of the pedal pad is as specified when the pedal is depressed with a force of **589 N {60 kgf, 132 lbf}**.

Pedal-to-floor clearance
95 mm {3.74 in} min. (Without carpet)

2. If the distance is less than specified, inspect for air in the brake system.

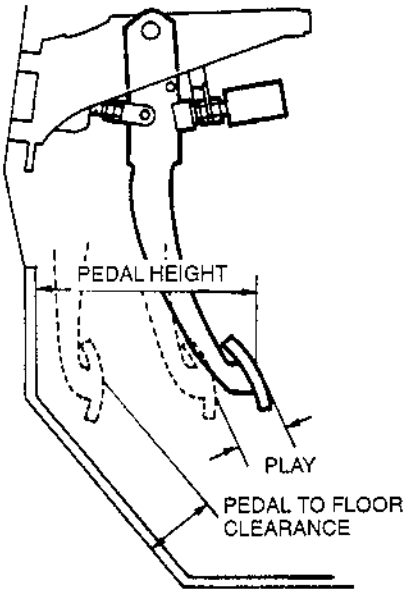

U5U41102

BRAKE PEDAL ADJUSTMENT

X5U411W02

Brake Pedal Height Adjustment

1. Disconnect the brake switch connector.
2. Loosen locknut B and turn switch A until it does not contact the pedal.
3. Loosen locknut D and turn rod C to adjust the height.
4. Tighten the bolt with locknut B so that clearance between the bolt for brake switch A and pedal stopper is within the specification.

   Specification
   0.1—1.0 mm {0.004—0.039 in}
   Tightening torque
   14—17 N·m {140—180 kgf·cm, 122—156 in·lbf}

5. Connect the brake switch connector.
6. After adjustment, inspect the pedal play and the brake light operation.

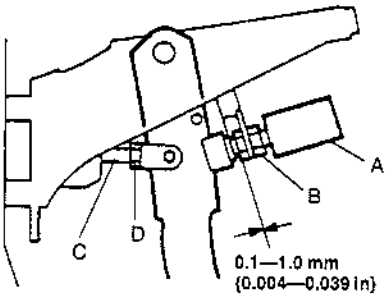

X5U411WA1

Pedal Play Adjustment

1. Remove the snap pin and the clevis pin.
2. Loosen locknut D and turn rod C to align the holes in the fork and in the pedal.
3. Install the clevis pin and the snap pin.
4. Verify the pedal height and the brake light operation.

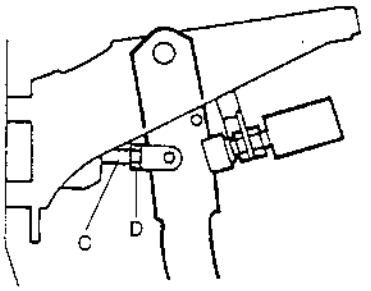

X5U411WA2

Tightening torque
24—34 N·m {2.4—3.5 kgf·m, 17—25 ft·lbf}

BRAKE PEDAL REMOVAL/INSTALLATION

X5U411W03

1. Disconnect the brake switch connector.
2. Remove in the order indicated in the table.
3. Install in the reverse order of removal.
4. After installation, verify and adjust the pedal height and free play as necessary.

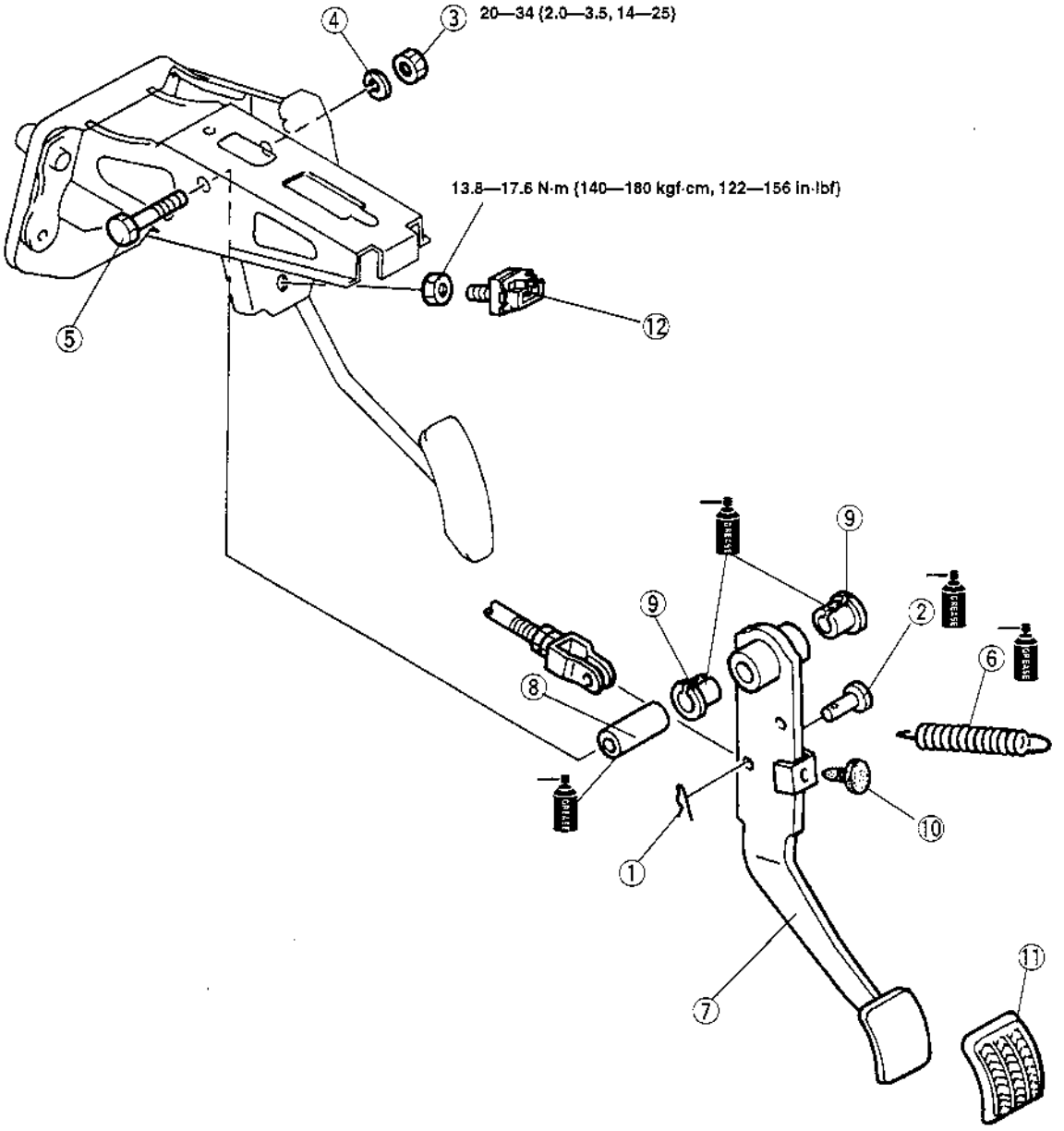

U5U41105

1	Spring clip
2	Clevis pin
3	Nut
4	Spring washer
5	Bolt
6	Return spring

7	Brake pedal
8	Guide pipe
9	Bushing
10	Stopper
11	Pedal pad
12	Brake switch

BRAKE SWITCH INSPECTION

X5U411W04

1. Disconnect the brake switch connector.
2. Check for continuity between the terminals of the brake switch connector by using the circuit tester.

○—○ : Continuity

Condition	Terminal			
	A	B	C	D
When the brake pedal is depressed	○—○			
When the brake pedal is not depressed			○—○	

X5U411WB1

3. If not as specified, replace the brake switch.

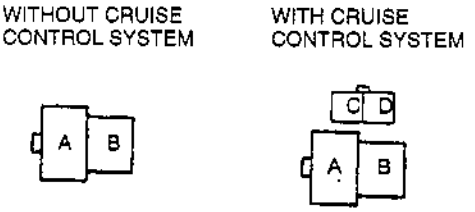

X5U411WB0

MASTER CYLINDER REMOVAL/INSTALLATION

X5U411W05

1. Remove in the order indicated in the table.
2. Install in the reverse order of removal.

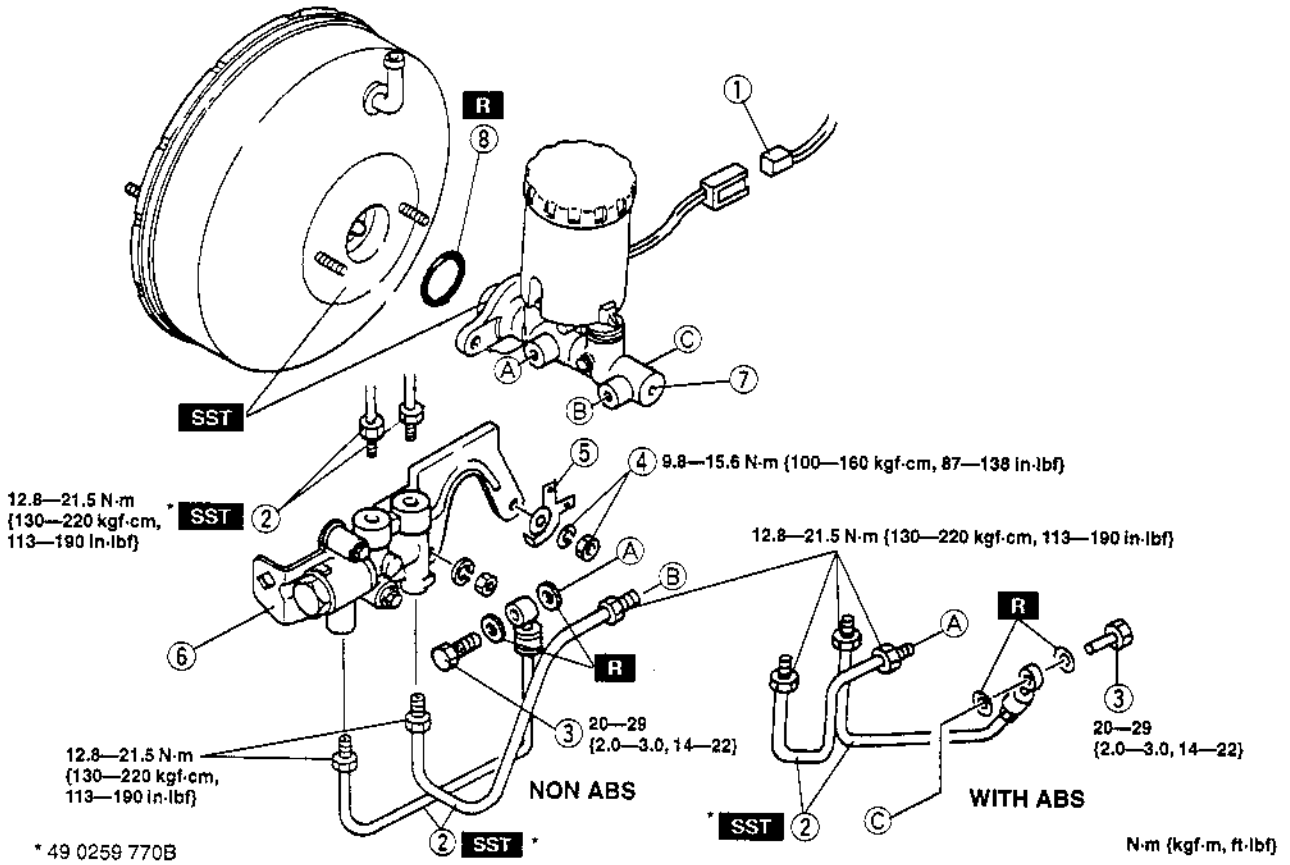

1	Fluid level sensor connector
2	Brake pipe
3	Connector bolt
4	Nut and washer
5	Connector bracket

6	Proportioning bypass valve and bracket
7	Master cylinder ☞ Installation Note
8	O-ring (ABS model)

Master Cylinder Installation Note
Non ABS model

1. Measure the clearance between the push rod of the power brake unit and the piston of the master cylinder.
   (1) Place the **SST** at the top of the master cylinder. Turn the adjusting bolt until it contacts the bottom of the piston.

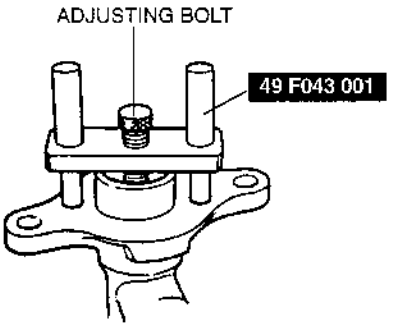

   (2) Apply a **66.7 kPa {500 mmHg, 19.7 inHg}** vacuum to the power brake unit by using a vacuum pump.

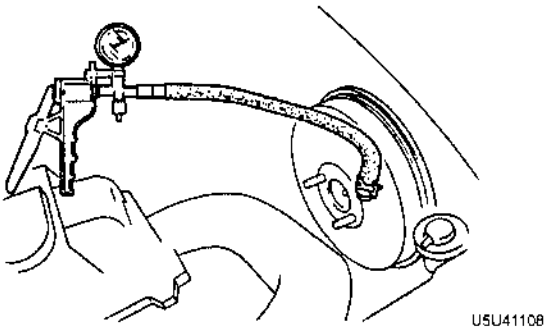

   (3) Invert the **SST** used in step 1, and place it on the power brake unit.
   (4) Measure the clearance between the end of the adjusting bolt and the push rod of the power brake unit. If it is not **0 mm {0 in}**, loosen the push rod locknut and turn the push rod to make the adjustment.

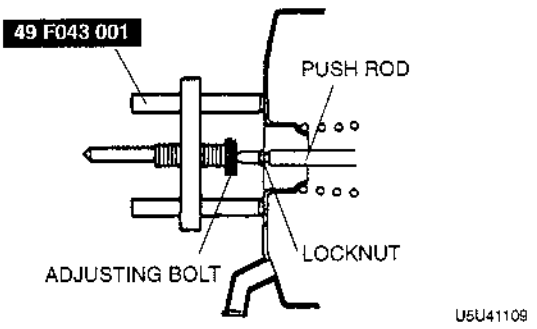

2. By making the above adjustment, the clearance between the push rod and piston (after installation of the brake master cylinder and the power brake unit) will be as shown in the table below.

Condition	Clearance
When vacuum applied to unit is approx. 66.7 kPa {500 mmHg, 19.7 inHg}.	0.1—0.4 mm {0.004—0.016 in}

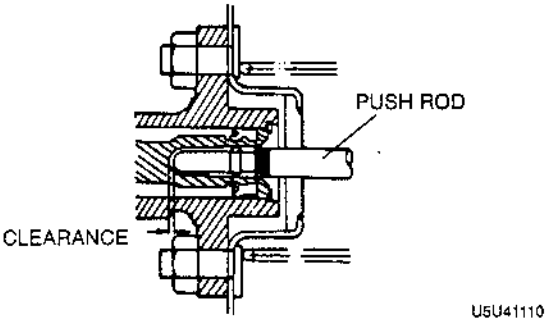

ABS model

1. Inspect the push rod clearance as follows.
   (1) Turn the nut of the **SST** clockwise to fully retract the **SST** gauge rod. Attach the **SST** to the power brake unit.

   Tightening torque
   9.8—16 N·m {1.0—1.6 kgf·m, 7.2—11 ft·lbf}

   (2) Apply a **66.7 kPa {500 mmHg, 19.7 inHg}** vacuum by using a vacuum pump.

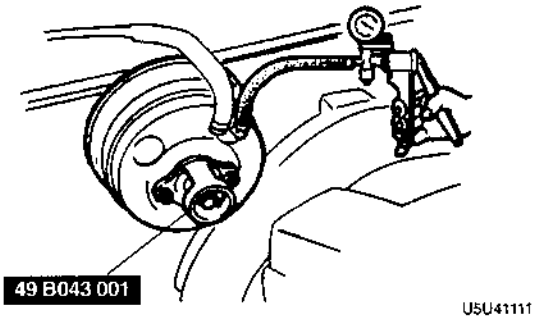

   (3) Turn the adjusting nut of the **SST** counterclockwise until the gauge rod just contacts the push rod end of the power brake unit. Push lightly on the end of the gauge rod to be sure it is seated. Verify that there is no gap between the adjusting nut and **SST** body.

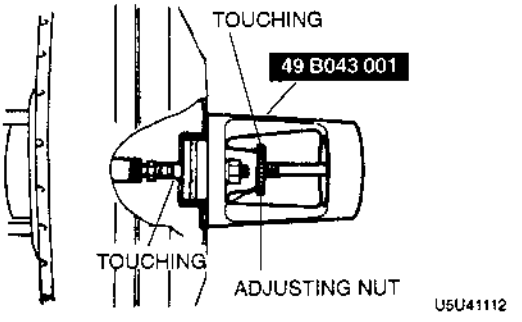

(4) Remove the **SST** from the power brake unit without disturbing the adjusting nut. Set the **SST** onto the master cylinder as shown in the figure.

Caution

- **When pushing the SST gauge rod into the master cylinder piston, only use enough pressure to push the rod to the bottom of the piston. If too much pressure is applied, a false reading will occur.**

(5) Push lightly on the end of the **SST** gauge rod to be sure it has contacted the bottom of the master cylinder piston, but do not push so hard that the piston moves. Note any clearance between the **SST** body and the adjusting nut (clearance B) or between the body and the master cylinder (clearance C).

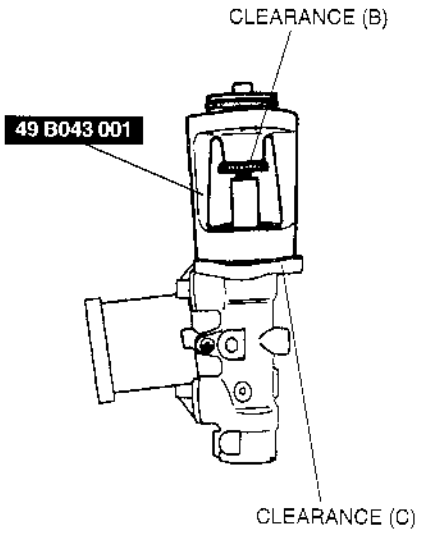

U5U41113

Measurement	Push rod
Clearance at (B)	Too short
Clearance at (C)	Too long
No clearance at (B) or (C)	Okay

2. Adjust the push rod clearance at B.

Note

- The threads of the push rod are specially designed so that the bolt becomes harder to turn past a certain point. This is to prevent the bolt from coming loose. Turn the bolt only within this range when adjusting.

(1) Push lightly on the end of the **SST** gauge rod, and measure the clearance between the adjusting nut and the **SST** body.

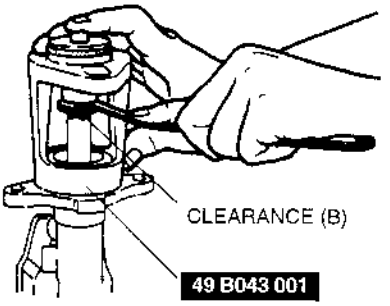

U5U41114

(2) Using the **SST**, turn the nut to lengthen the power booster push rod an amount equal to the clearance measured at B.

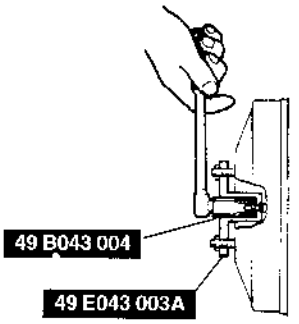

U5U41115

3. Adjust the push rod clearance at C.

Note

- The threads of the push rod are specially designed so that the bolt becomes harder to turn past a certain point. This is to prevent the bolt from coming loose. Turn the bolt only within this range when adjusting.

(1) Measure and record height D1 of the gauge rod.

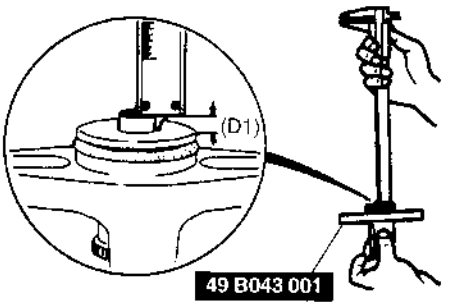

U5U41116

(2) Turn the adjusting nut until the **SST** body sets squarely on the master cylinder. (Turn only enough for the body to touch.)
(3) Measure and record height D2 of the gauge rod.

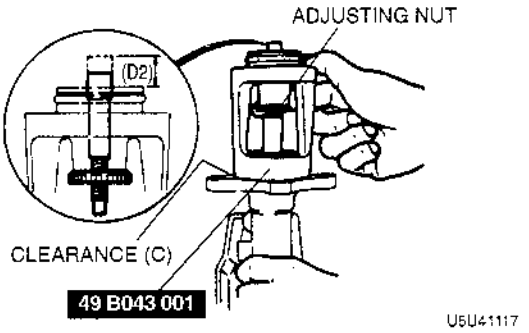

(4) Subtract D1 from D2 and, by using the **SST**, turn the nut to shorten the power booster push rod an amount equal to the sum.

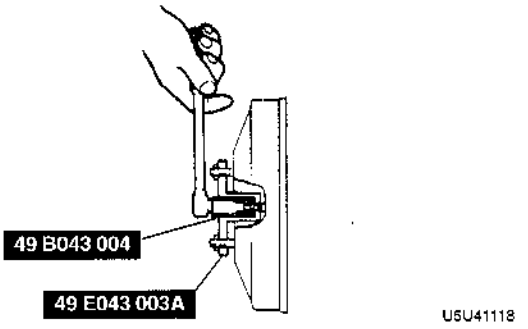

BRAKE FLUID LEVEL SENSOR INSPECTION

1. Disconnect the sensor connector.
2. Connect an ohmmeter to the connector.
3. Starting with the fluid level above the MIN mark on the reservoir, verify that there is no continuity.
4. Remove the brake fluid and verify continuity when the level is below the MIN mark.
5. Replace the sensor as necessary.

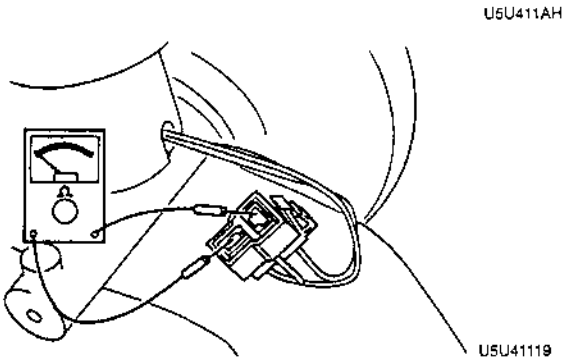

MASTER CYLINDER DISASSEMBLY/ASSEMBLY

X5U411W06

1. After removing the brake fluid, disassemble in the order indicated in the table.
2. Assemble in the reverse order of removal.

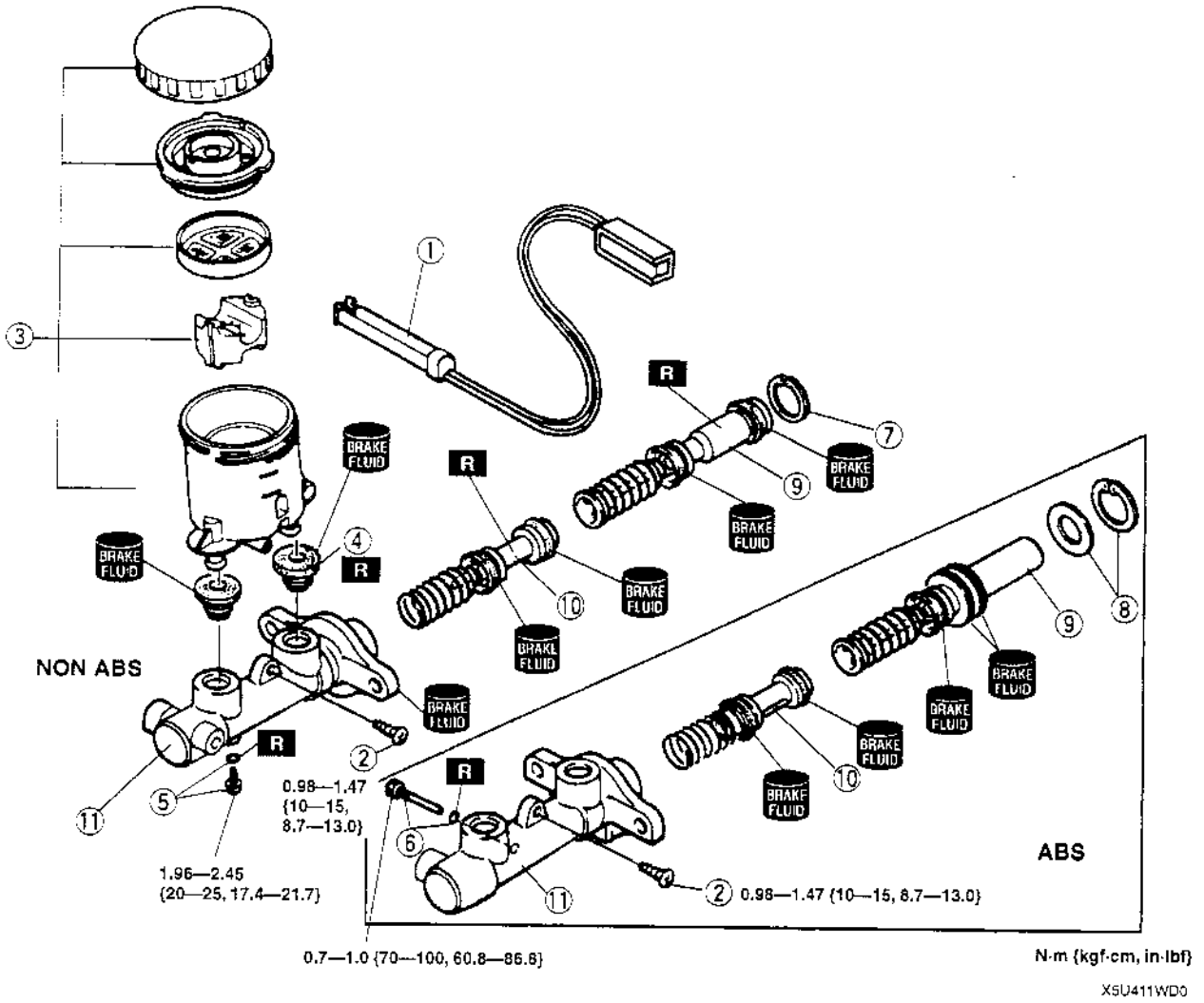

1	Fluid level sensor connector
2	Screw
3	Reservoir component
4	Bushings
5	Stop screw and O-ring (Non ABS model) ☞ Assembly Note
6	Stop pin and O-ring (ABS model) ☞ Assembly Note

7	Snap ring (Non ABS model)
8	Snap ring and spacer (ABS model)
9	Primary piston component
10	Secondary piston component
11	Master cylinder body

Stop Screw and O-Ring (Non ABS model) Assembly Note

1. Push the primary piston component in fully.
2. Install and tighten a new O-ring and the stop screw.
3. Push and release the piston to verify that it is held by the stop screw.

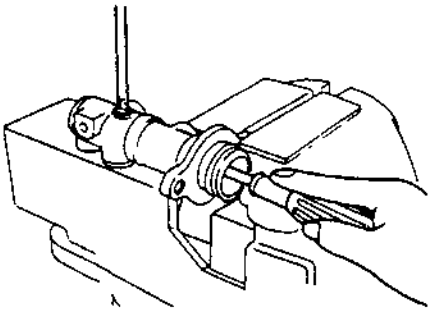

Stop Pin and O-Ring (ABS model) Assembly Note

1. Install the secondary piston component with the piston hole facing the stop pin.
2. Install and tighten a new O-ring and the stop pin.
3. Push and release the piston to verify that it is held by the stop pin.

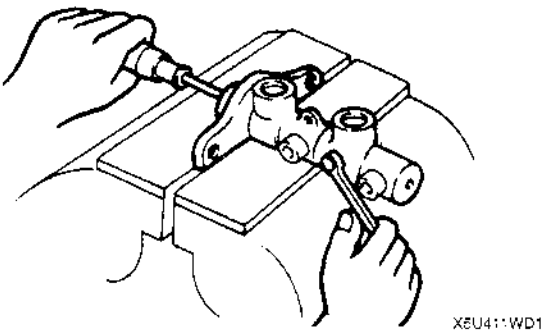

POWER BRAKE UNIT INSPECTION

X5U411W07

Power Brake Unit Function Inspection (Simple Method)

Step 1

1. With the engine stopped, depress the pedal a few times.
2. With the pedal depressed, start the engine.
3. If the pedal moves down slightly immediately after the engine starts, the unit is operating.

Step 2

1. Start the engine and let it run for **1 or 2 minutes.**
2. Stop the engine.
3. Depress the pedal with the usual force.
4. If the first pedal stroke is long and becomes shorter with subsequent strokes, the unit is operating.
5. If a problem is found, inspect for damage or improper connection of the check valve or vacuum hose. Repair as necessary and inspect it once again.

Step 3

1. Start the engine.
2. Depress the pedal with the usual force.
3. Stop the engine with the pedal depressed.
4. Hold the pedal down for about **30 seconds.**
5. If the pedal height does not change, the unit is operating.
6. If there is a problem, inspect for damage or improper connection of the check valve or vacuum hose. Repair as necessary and inspect once again.
7. If the nature of the problem is still not clear after following the 3 steps above, follow the more detailed inspect described in "Inspection using gauges," below.

Power Brake Unit Function Inspection (Inspection using gauges)

- Connect the **SST** gauges, a vacuum gauge, and a pedal depression gauge as shown. Bleed the air from the **SST** gauges before performing the following tests.

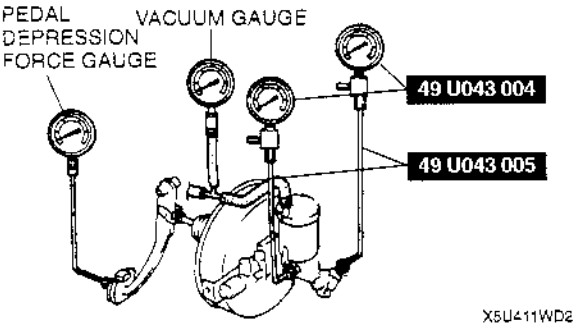

Inspection for vacuum loss (unloaded condition)

1. Start the engine.
2. Stop the engine when the vacuum gauge indicates **66.7 kPa {500 mmHg, 19.7 inHg}.**
3. Observe the vacuum gauge for **15 seconds**. If the gauge indicates **63.4—66.6 kPa {475—500 mmHg, 18.7—19.7 inHg}**, the unit is operating.

Inspection for vacuum loss (loaded condition)

1. Start the engine.
2. Depress the brake pedal with a force of **196 N {20 kgf, 44 lbf}.**
3. With the brake pedal depressed, stop the engine when the vacuum gauge indicates **66.7 kPa {500 mmHg, 19.7 inHg}.**
4. Observe the vacuum gauge for **15 seconds**. If the gauge indicates **63.4—66.6 kPa {475—500 mmHg, 18.7—19.7 inHg}**, the unit is operating.

Inspection for hydraulic pressure

1. If with the engine stopped **(vacuum 0 kPa {0 mmHg, 0 inHg})** the fluid pressure is within specification, the unit is operating.

Pedal force	Fluid pressure
196 N {20 kgf, 44 lbf}	1,079—1,177 kPa {11—12 kgf/cm^2, 156—171 psi}

2. Start the engine. Depress the brake pedal when the vacuum reaches **66.7 kPa {500 mmHg, 19.7 inHg}**. If the fluid pressure is within specification, the unit is operating.

Pedal force	Fluid pressure
196 N {20 kgf, 44 lbf}	5,199—5,494 kPa {53—56 kgf/cm^2, 754—796 psi}

POWER BRAKE UNIT REMOVAL/INSTALLATION

1. Remove the master cylinder and the proportioning bypass valve. (Refer to MASTER CYLINDER REMOVAL/INSTALLATION.)
2. Remove in the order indicated in the table.
3. Install in the reverse order of removal.

X5U411W08

1	Vacuum hose
2	Snap pin
3	Clevis pin
4	Nut
5	Power brake unit
6	Gasket

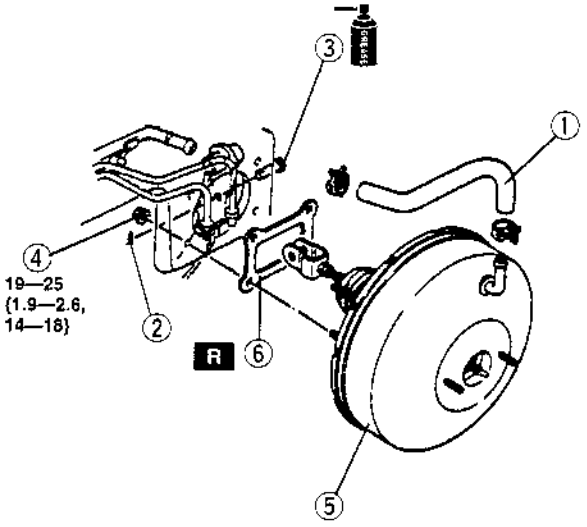

N·m {kgf·m, ft·lbf}

X5U411WA4

PROPORTIONING BYPASS VALVE INSPECTION

X5U411W09

1. Connect the **SSTs** and the adapters to the brake pipes as shown in the figure.

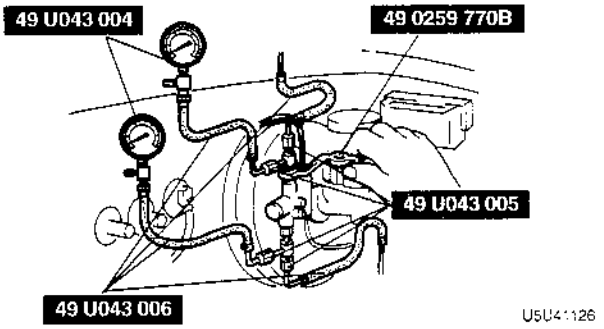

2. Bleed the air from the brake system.
3. Measure the fluid pressure from the master cylinder and to the rear brakes. If not as specified, replace the valve component.

Specification

Fluid pressure kPa {kgf/cm², psi}			
A	A'	B	B'
3,923 {40, 569}	3,923 {40, 569} ± 294 {3, 43}	5,884 {60, 850}	4,846 {49.4, 683} ± 392 {4, 57}

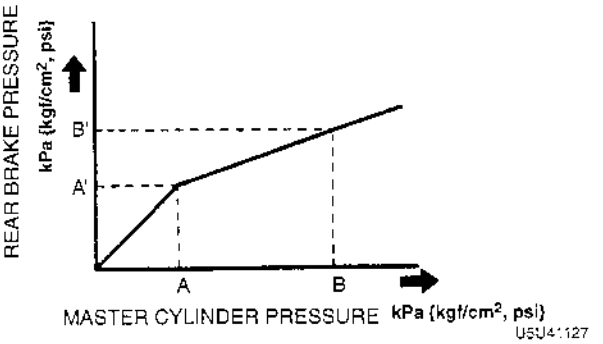

PROPORTIONING BYPASS VALVE REPLACEMENT

X5U411W10

1. Remove in the order indicated in the table.
2. Install in the reverse order of removal.

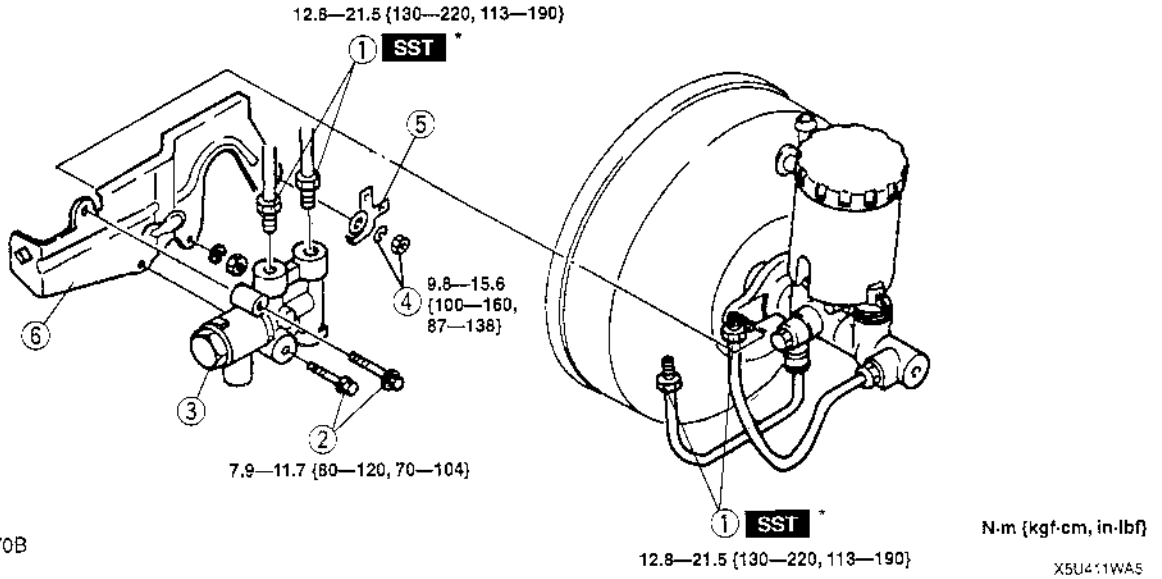

* 49 0259 770B

1	Brake pipe
2	Bolt
3	Proportioning bypass valve

4	Nut and washer
5	Connector bracket
6	Proportioning bypass valve bracket

FRONT BRAKE (DISC) INSPECTION

X5U411W11

Disc Pad Thickness Inspection

1. On level ground, jack up the front of the vehicle and support it with safety stands.
2. Remove the wheels.
3. Look through the caliper inspection hole and verify the remaining thickness of the pad.

Thickness
1.0 mm {0.04 in} min.

Disc Plate Thickness Inspection

1. Measure the thickness of the disc plate.

Caution
- **When it is necessary to machine the disc plate, if the disc plate is removed from the vehicle then machined, excessive runout may result. Machine the disc plate with it installed on the vehicle.**

Minimum thickness:
18.0 mm {0.71 in}
Minimum thickness after machining by using a brake lathe on-vehicle:
18.8 mm {0.74 in}

2. If the thickness is not within the specification, replace the disc plate.

Disc Plate Runout Inspection

- Tighten the disc plate to the wheel hub by using two wheel nuts. When measuring runout, measure at the outer edge of the disc plate surface.

Runout limit
0.05 mm {0.002 in} max.

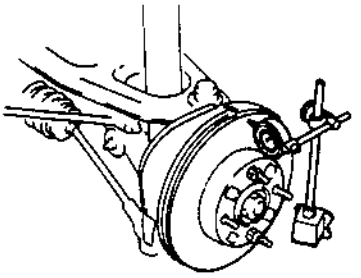

U5U41129

FRONT BRAKE (DISC) REMOVAL/INSTALLATION

X5U411W12

1. Remove in the order indicated in the table.
2. Install in the reverse order of removal.

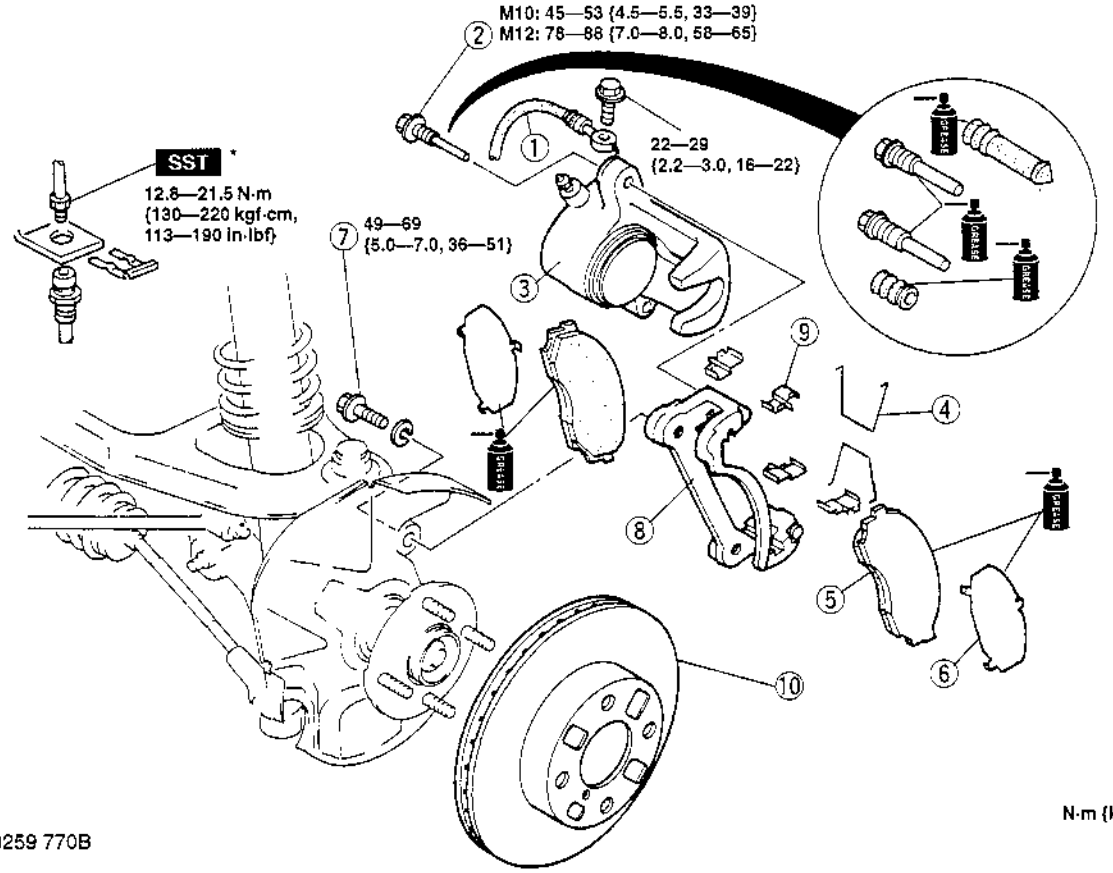

1	Brake hose
2	Lock bolt
3	Caliper
4	Spring
5	Disc pad ☞ Installation Note
6	Shim
7	Bolt
8	Mounting support
9	Guide plate
10	Disc plate ☞ Removal Note ☞ Installation Note

Disc Plate Removal Note

- Mark the wheel hub bolt and disc plate before removal for reference during installation.

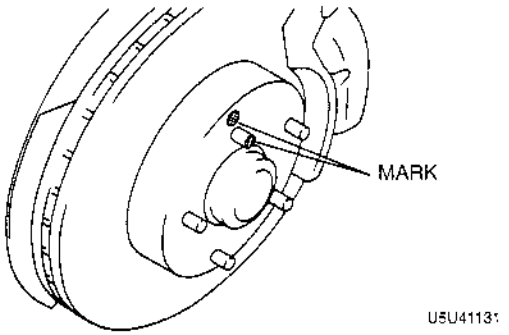

Disc Plate Installation Note

1. Remove any rust or grime on the contact face of the disc plate and wheel hub.
2. Install the disc plate and align the marks made before removal.

Disc Pad Installation Note

1. Push the piston inward by using the **SST**.
2. Install the new pads in the mounting support.

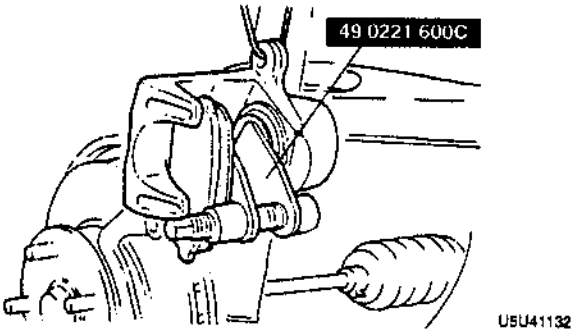

DISC PAD (FRONT) REPLACEMENT

X5U411W13

1. Remove in the order indicated in the table.
2. Install in the reverse order of removal.

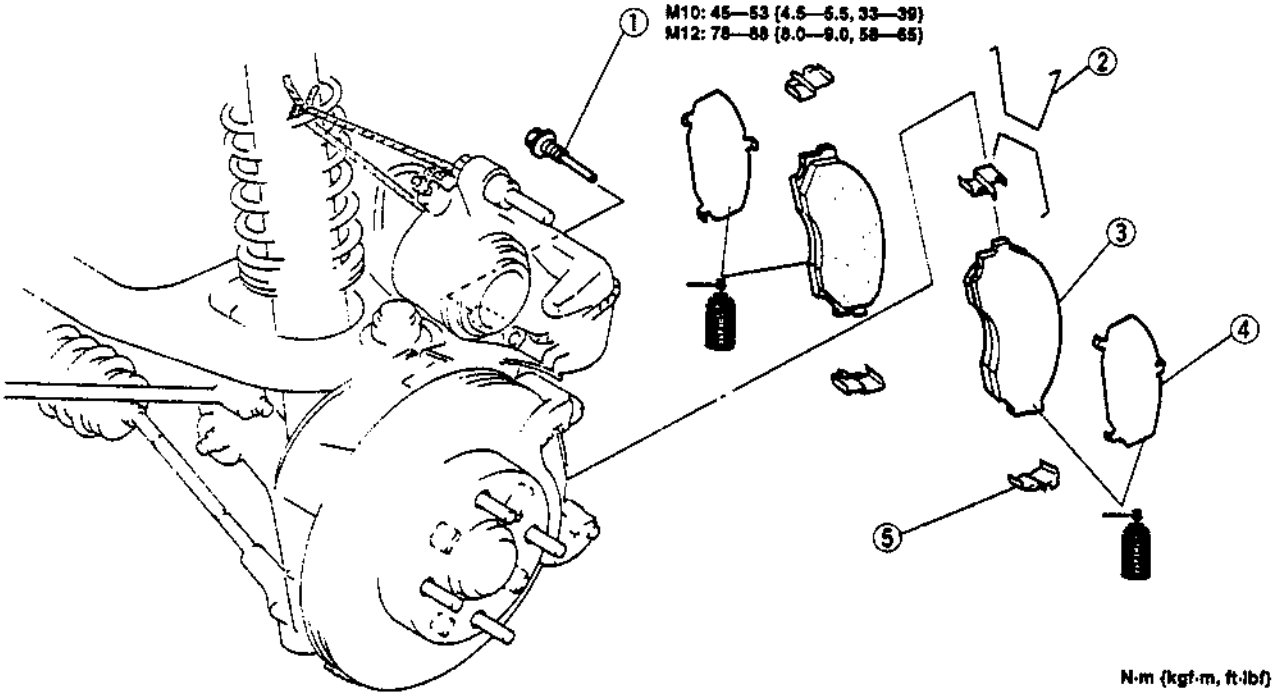

1	Lock bolt
2	Spring
3	Disc pad ☞ 04–11 FRONT BRAKE (DISC) REMOVAL/INSTALLATION, Disc Pad Installation Note

4	Shim
5	Guide plate

CALIPER (FRONT) DISASSEMBLY/ASSEMBLY

X5U411W14

1. Disassemble in the order indicated in the table.
2. Install in the reverse order of removal.

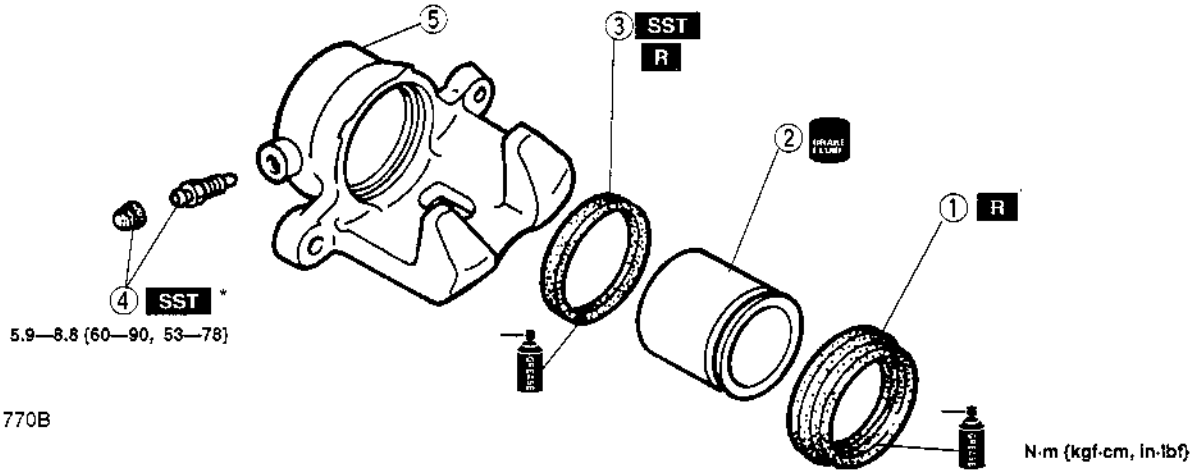

X5U411WC2

1	Dust seal
2	Piston ☞ Disassembly Note
3	Piston seal ☞ Disassembly Note
4	Bleeder screw and bleeder cap
5	Caliper body

Piston Disassembly Note

1. Place a piece of wood in the caliper.
2. Gently blow compressed air through the hole to force the piston out of the caliper.

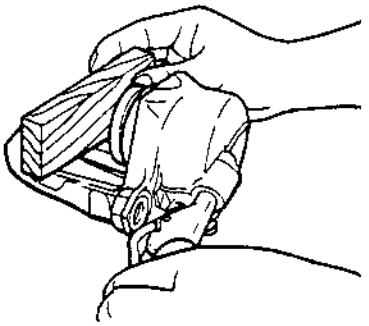

U5U41135

Piston Seal Disassembly Note

- Remove the piston seal by using the **SST**.

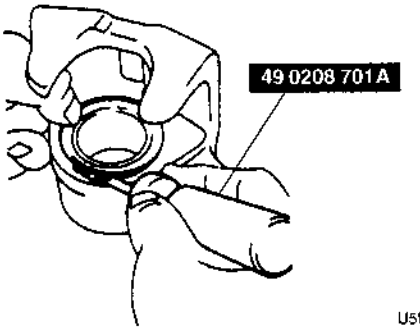

U5U41136

REAR BRAKE (DISC) INSPECTION

X5U411W15

Disc Pad Thickness Inspection

1. On level ground, jack up the rear of the vehicle and support it with safety stands.
2. Remove the wheels.
3. Look through the caliper inspection hole and verify the remaining thickness of the pad.

Thickness
1.0 mm {0.04 in} min.

Disc Plate Thickness Inspection

1. Measure the thickness of the disc plate.

Caution
- **When it is necessary to machine the disc plate, if the disc plate is removed from the vehicle then machined, excessive runout may result. Machine the disc plate with it installed on the vehicle.**

Minimum thickness:
8.0 mm {0.31 in}
Minimum thickness after machining by using a brake lathe on-vehicle:
8.4 mm {0.33 in}

2. If the thickness is not within the specification, replace the disc plate.

Disc Plate Runout Inspection

- Tighten the disc plate to the wheel hub by using two wheel nuts. When measuring runout, measure at the outer edge of the disc plate surface.

Runout limit
0.05 mm {0.002 in} max.

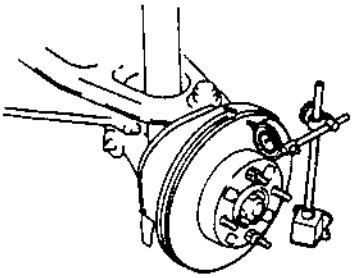

U5U41137

REAR BRAKE (DISC) REMOVAL/INSTALLATION

X5U411W16

1. Remove in the order indicated in the table.
2. Install in the reverse order of removal.

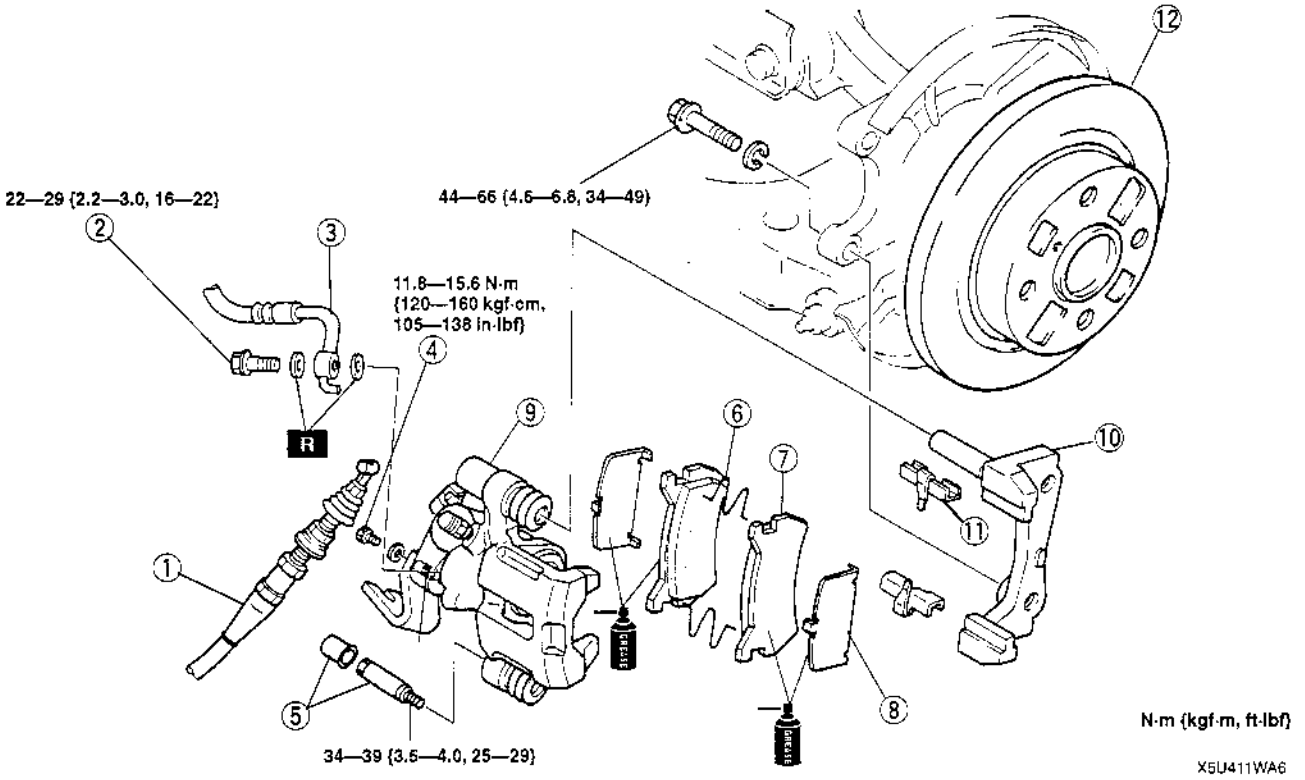

X5U411WA6

1	Parking brake cable
2	Connecting bolt
3	Brake hose
4	Plug
5	Cap and lock bolt
6	Spring
7	Disc pad ☞ Installation Note
8	Shim

9	Caliper
10	Mounting support
11	Guide plate
12	Disc plate ☞ 04–11 FRONT BRAKE (DISC) REMOVAL/INSTALLATION, Disc Plate Removal Note ☞ 04–11 FRONT BRAKE (DISC) REMOVAL/INSTALLATION, Disc Plate Installation Note

Disc Pad Installation Note

1. Turn the manual adjustment gear counterclockwise by using an Allen wrench to pull the brake caliper piston back.

RETRACTING PISTON

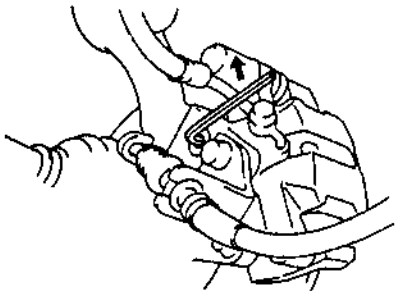

U5U41139

2. Install the disc pads.
3. Turn the manual adjustment gear clockwise until the brake pads just touch the disc plate.
4. Return the manual adjustment gear counterclockwise 1/3 turn.

ADJUSTING BRAKE PADS

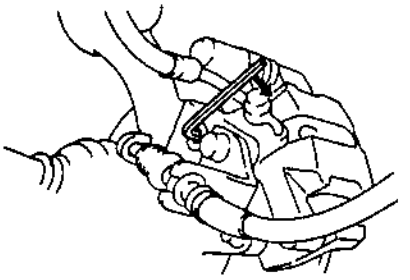

U5U41140

DISC PAD (REAR) REPLACEMENT

X5U411W:7

1. Remove in the order indicated in the table.
2. Install in the reverse order of removal.

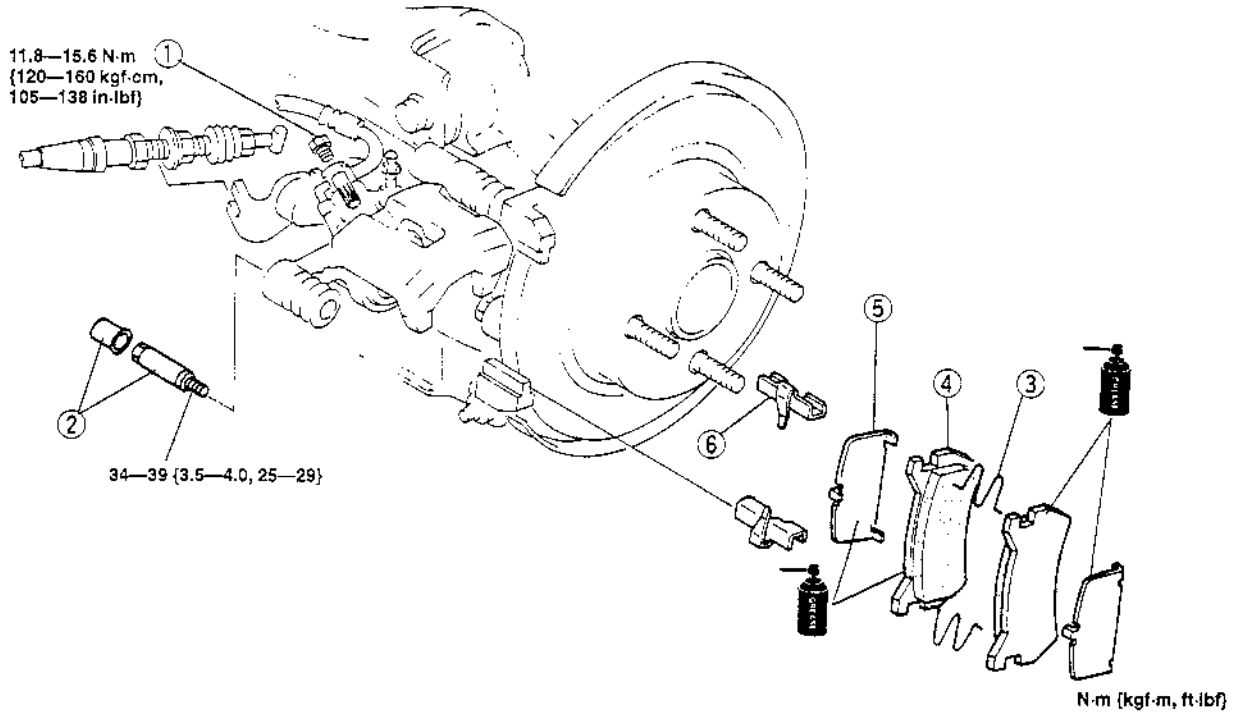

X5U411WC3

1	Plug
2	Cap and lock bolt
3	Spring
4	Disc pad ☞ 04–11 REAR BRAKE (DISC) REMOVAL/INSTALLATION, Disc Pad Installation Note

5	Shim
6	Guide plate

CALIPER (REAR) DISASSEMBLY/ASSEMBLY

X5U411W18

1. Disassemble in the order indicated in the table.
2. Assemble in the reverse order of disassembly.

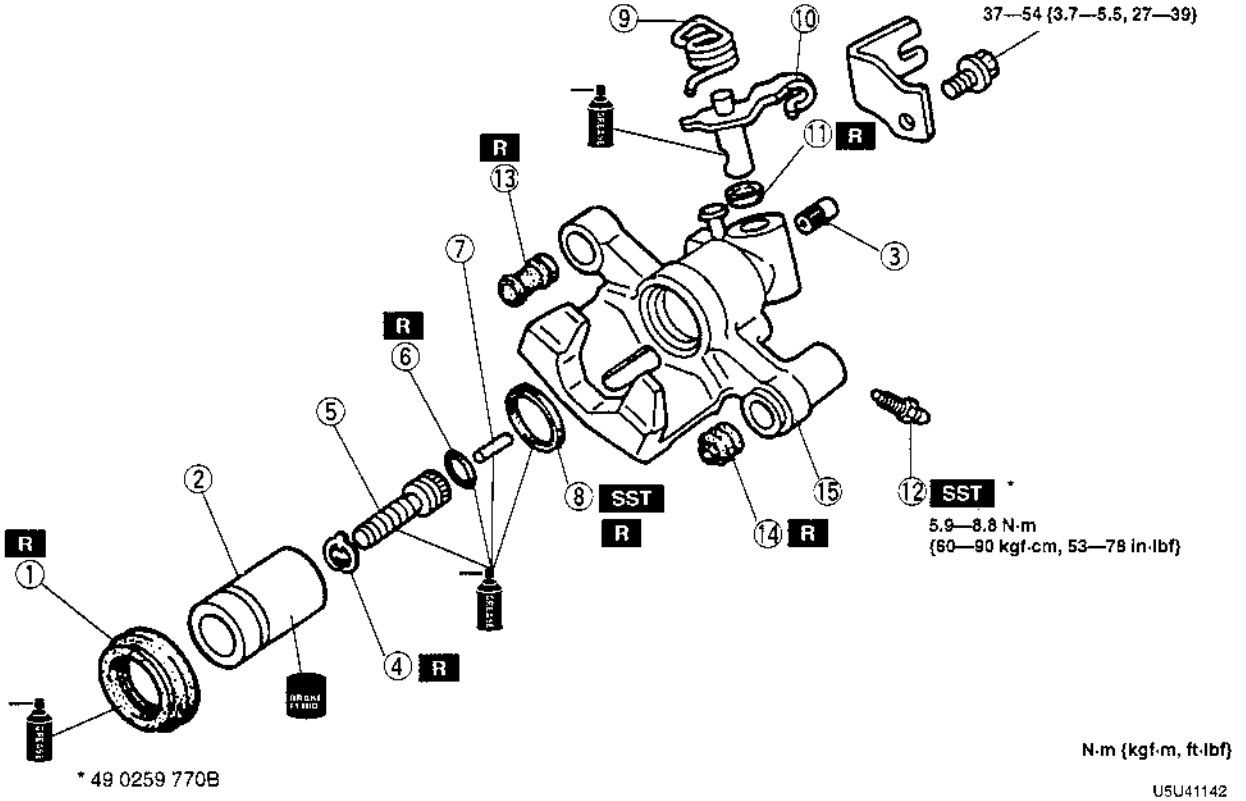

1	Dust seal
2	Piston ☞ Disassembly Note ☞ Assembly Note
3	Manual adjustment gear
4	Snap ring
5	Adjusting bolt
6	O-ring
7	Connecting link
8	Piston seal ☞ 04–11 CALIPER (FRONT) DISASSEMBLY/ASSEMBLY, Piston Seal Disassembly Note

9	Spring
10	Operating lever
11	Boot
12	Bleeder screw
13	Boot
14	Boot
15	Caliper body

Piston Disassembly Note

1. Turn the manual adjustment gear clockwise by using an Allen wrench. (Turn the manual adjustment gear until it turns easily.)
2. Remove the piston.

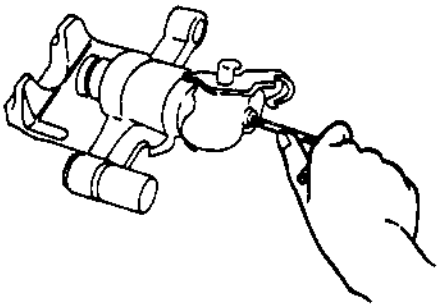

U5U41143

Piston Assembly Note

- Insert the piston into the caliper and turn the adjustment gear counterclockwise by using an Allen wrench to pull the piston in fully. (Turn the adjustment gear until it stops.)

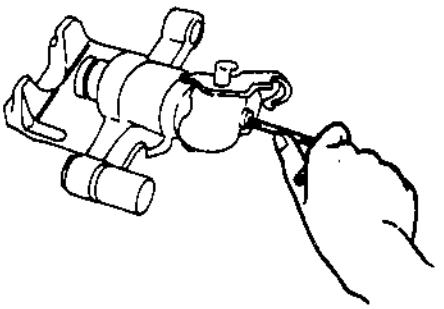

U5U41144

04–12 PARKING BRAKE SYSTEM

PARKING BRAKE INSPECTION

X5U412W01

1. Depress the brake pedal several times.
2. Verify that the stroke is as specified when the parking brake lever is pulled with a force of **98 N {10 kgf, 22 lbf}**.

Stroke
5—7 notches

PARKING BRAKE ADJUSTMENT

X5U412W02

1. Depress the brake pedal several times.
2. Remove the cover.
3. Turn the adjusting nut to adjust the lever stroke.
4. Pull the parking brake lever one notch, and verify that the parking brake warning light comes on. Release the parking brake.
5. Turn the wheels by hand, and verify that the brakes do not drag.

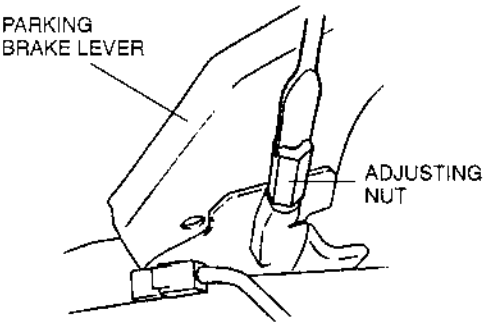

U5U41201

PARKING BRAKE LEVER REMOVAL/INSTALLATION

X5U412W03

1. Remove in the order indicated in the table.
2. Install in the reverse order of removal.
3. After installation, adjust the parking lever stroke.

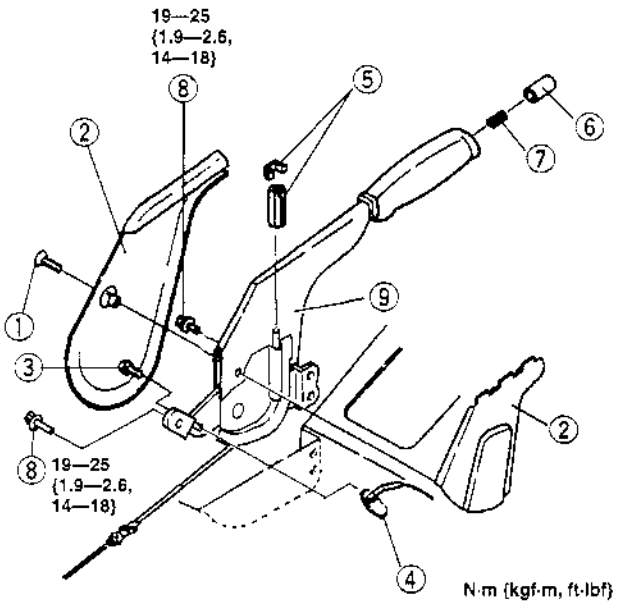

X5U412WA0

1	Screw
2	Cover
3	Bolt
4	Parking brake switch ☞ Installation Note
5	Adjusting nut and clip
6	Release button
7	Spring
8	Bolt
9	Parking brake lever

Parking Brake Switch Installation Note

1. Install the parking brake switch so that it contacts the parking brake lever when the lever is fully released.
2. Turn the ignition switch to ON, and verify that the parking brake warning light illuminates with the lever pulled up one notch.

PARKING BRAKE CABLE REMOVAL/INSTALLATION

X5U412W04

1. Remove the exhaust pipe heat insulator.
2. Remove in the order indicated in the table.
3. Install in the reverse order of removal.
4. After installation:
   (1) Adjust the parking brake lever stroke.
   (2) Depress the brake pedal a few times.
   (3) Verify that the rear brakes do not drag while the wheels are rotated by hand.

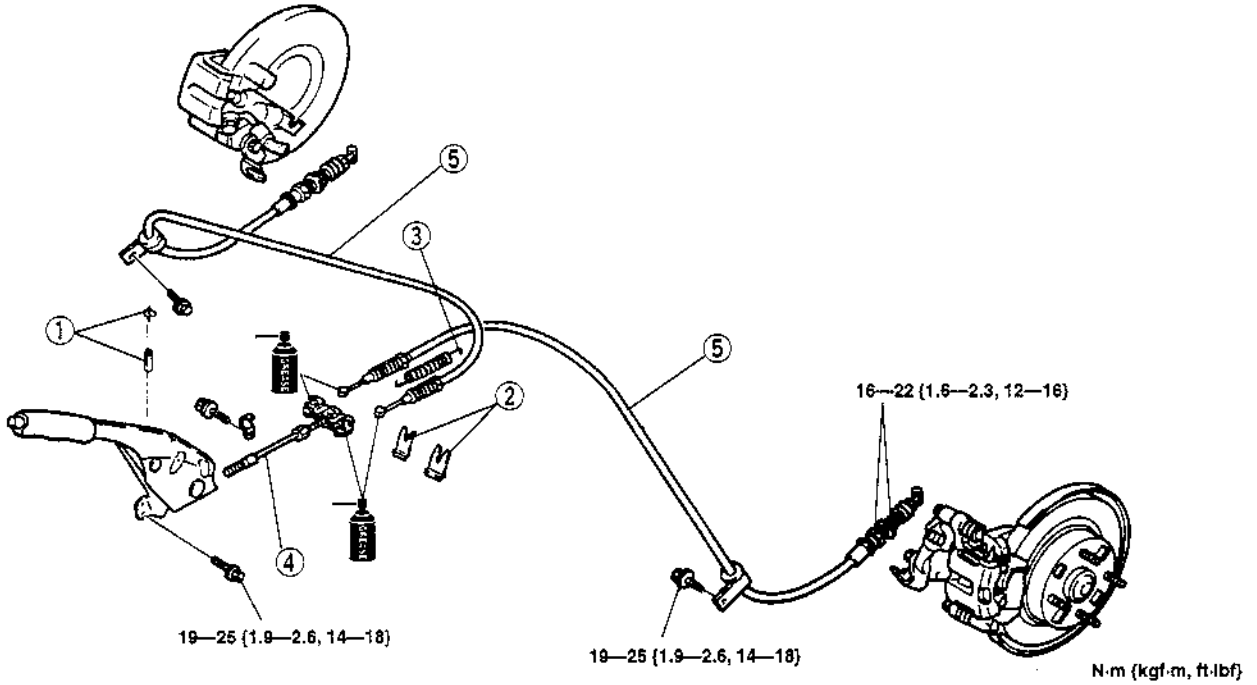

X5U412WA1

1	Adjusting nut and clip
2	Clip
3	Spring

4	Front cable
5	Rear cable

04–13 ANTILOCK BRAKE SYSTEM

ABS HYDRAULIC UNIT INSPECTION

System Inspection

Note
- If any past diagnostic trouble code is memorized, the system inspection mode will not work. Make sure that there is no codes in the ABS memory before performing this inspection.

1. Verify that the battery is fully charged. With the ignition switch at ON, verify that the ABS warning light goes out after **2—4 seconds**.
2. If the light stays ON after **2—4 seconds** the ABS control module detects a failure and will not activate the ABS hydraulic unit. Follow the troubleshooting procedures.
3. Turn the ignition switch off.
4. On level ground, jack up the vehicle and support it evenly on safety stands. Shift the transmission to neutral or N position.
5. Release the parking brake.
6. Rotate the wheels by hand, and inspect for brake drag.

Caution
- **Connecting the wrong data link connector terminals may possibly cause a malfunction. Carefully connect the specified terminals only.**

7. Using a jumper wire, connect the TBS and GND terminals of the data link connector.

X5U413W01

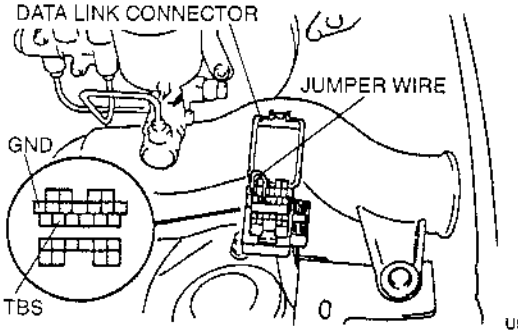

U5U41301

8. Depress the brake pedal, and have an assistant verify that the right front wheel will not turn.
9. With the brake pedal still depressed, turn the ignition switch to ON and verify that the brake is released momentarily (approx. **0.5 sec.**) and that the wheel turns when pressure-reduction operates.
10. Verify operation of the remaining wheels in order: left front, right rear, left rear.

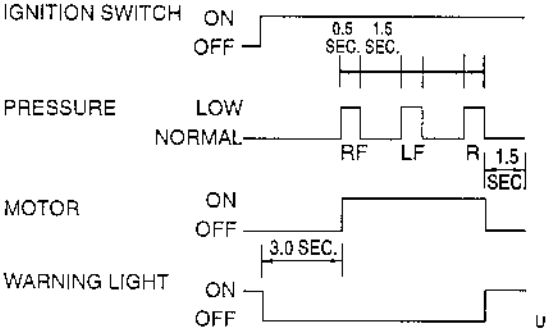

U5U41302

11. When steps 9 and 10 show correct operation, the following systems are okay.
    - Brake piping to ABS hydraulic unit
    - Braking system, including ABS hydraulic unit
    - Electrical system in ABS hydraulic unit (solenoid, ABS motor, etc.)
    - ABS control module, its output system (solenoid, relay, etc.) and harness

    The following are not inspected with the steps 9 and 10.
    - Input system and harness of ABS control module
    - Intermittent failure
    - Fluid leakage
12. Replace the ABS hydraulic unit if wheels do not rotate. Inspect brake piping to ABS hydraulic unit if wheels rotate but their rotation order is not correct. Remove the jumper wire.

ABS Motor Inspection (Including Harness To ABS Control Module)

1. Turn the ignition switch off, and disconnect the ABS control module connector.
2. Connect the **SST** to the ABS control module connector.

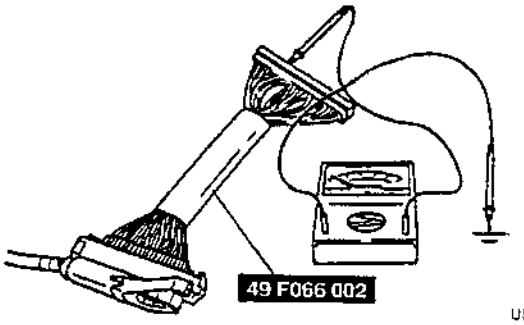

U5U41303

3. Measure the resistance between terminal X of the control module connector and a ground.

   Resistance
   1 Ω max.

4. If not as specified, inspect the wiring harness between the ABS motor and the control module, and inspect the ABS motor. (Refer to ABS Motor Inspection.)

ABS Motor Inspection

1. Turn the ignition switch off.
2. Disconnect the ABS hydraulic unit connector (2 pin).
3. Measure the resistance between terminal A of the ABS hydraulic unit connector and body ground.

VIEW FROM TERMINAL SIDE

U5U41304

   Resistance
   1 Ω max.

4. Verify that the motor operates when applying 12 V to the terminal A.
5. If not as specified, repair the harness or replace the ABS hydraulic unit as necessary.

Solenoid Valve Inspection Including the Valve Relay

1. Turn the ignition switch off.
2. Disconnect the ABS hydraulic unit connector (10 pin).
3. Apply 12 V between terminal A and D. Measure the resistance between terminal B and the following terminals at the ABS hydraulic unit connector (10 pin).

Specification

Terminal	H	I	J	M	N	O
Resistance (Ω)	4.04—4.54			8.04—9.04		

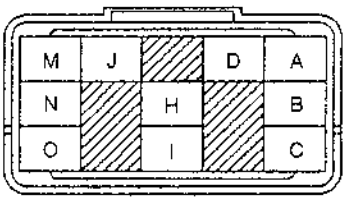

VIEW FROM TERMINAL SIDE

U5U41305

4. If not as specified, inspect the valve relay and solenoid valves.

Solenoid Valve Inspection

1. Remove the ABS hydraulic unit.
2. Remove the valve relay. Measure the resistance between terminal X at the valve relay terminal and the following terminals at the ABS hydraulic unit connector.

Specification

Terminal	H	I	J	M	N	O
Resistance (Ω)	4.04—4.54			8.04—9.04		

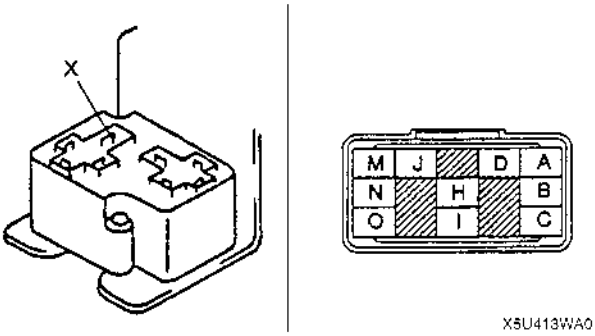

X5U413WA0

3. If not as specified, repair the harness or replace the ABS hydraulic unit as necessary.

ABS HYDRAULIC UNIT REMOVAL/INSTALLATION

X5U413W02

1. Remove in the order indicated in the table.
2. Install in the reverse order of removal.

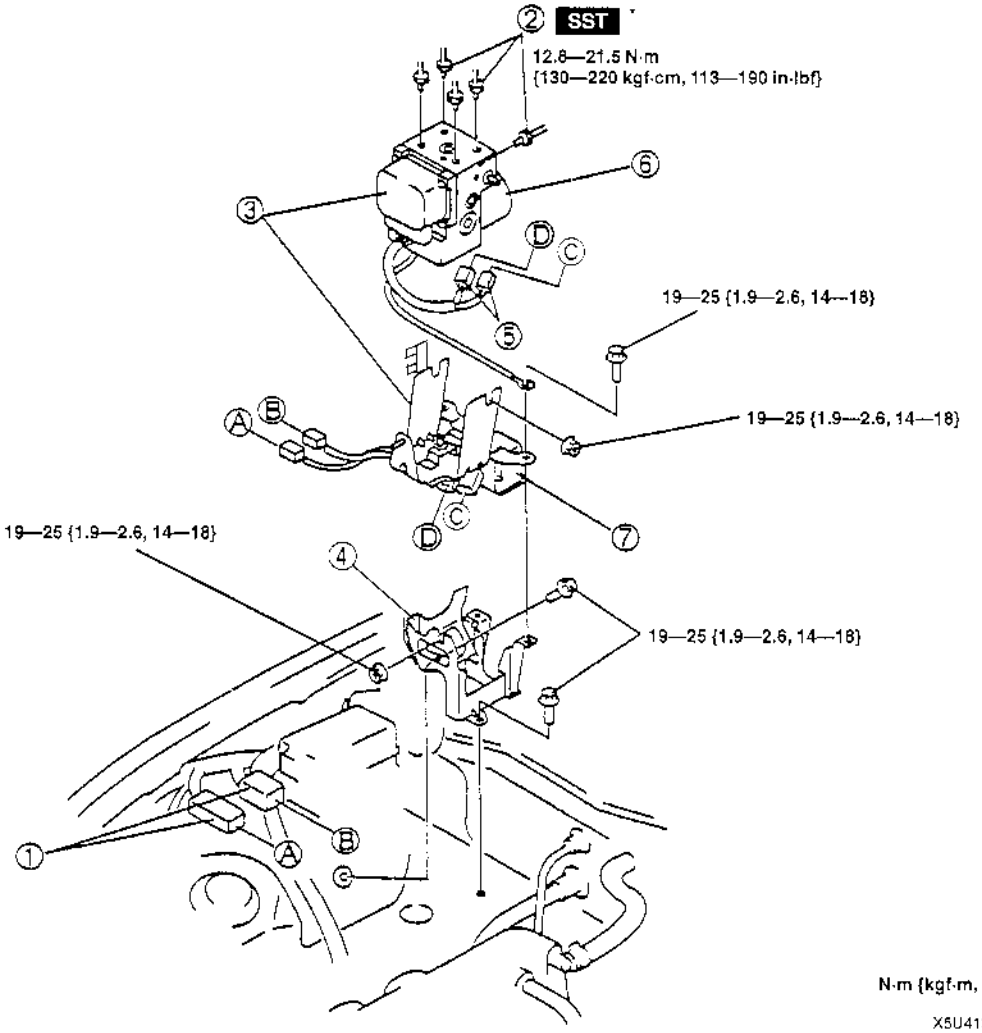

* 49 0259 770B

N·m {kgf·m, ft·lbf}

X5U413WA1

1	Connector
2	Brake pipe
3	ABS hydraulic unit and bracket
4	Bracket

5	Connector
6	ABS hydraulic unit ☞ Installation Note
7	Bracket

ABS Hydraulic Unit Installation Note

1. Pass the connector from the ABS HU under the bracket, then connect it with connectors A and B from the ABS relay.
2. Insert the clip for connector A into the bracket hole.
3. Gather the slack in the harness from the ABS relay and tie it with a band to the bracket.

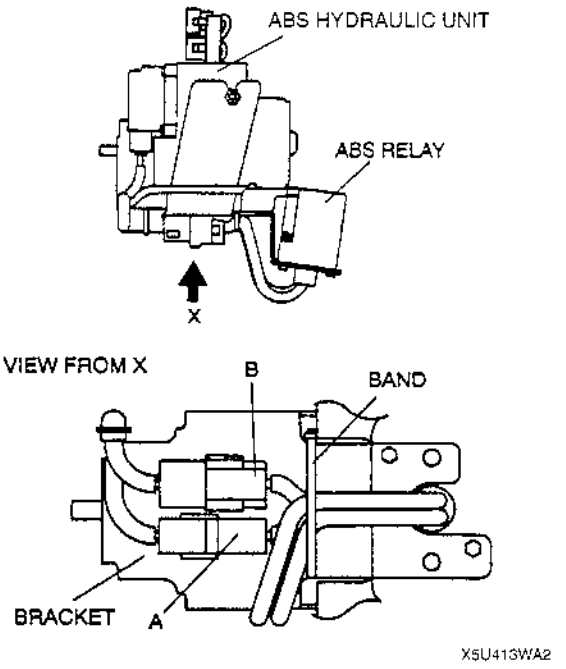

X5U413WA2

ABS CONTROL MODULE REMOVAL/INSTALLATION

X5U413W03

1. Remove the glove compartment. (Refer to 09–17 GLOVE COMPARTMENT REMOVAL/INSTALLATION.)
2. Remove in the order indicated in the table.
3. Install in the reverse order of removal.

Caution

- **Connect the connector securely. If a poor contact occurs, the ABS system may malfunction.**

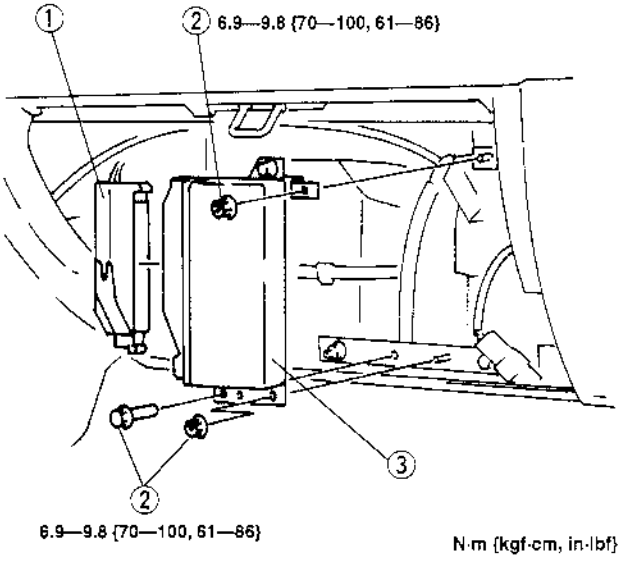

X5U413WA3

1	Connector
2	Nuts and bolt
3	ABS control module

ABS HARNESS AND INPUT SIGNAL INSPECTION

Caution

- **Disconnecting and connecting the ABS CM connector must be done with the ignition switch off.**
- **When checking the harness connector, the SST must be used.**

1. Disconnect the ABS CM connector and connect the **SST** to the harness connector with the ignition switch OFF.
2. Attach the tester leads to the **SST** to inspect for voltage, continuity, or resistance, referring to the table below.

X5U413W04

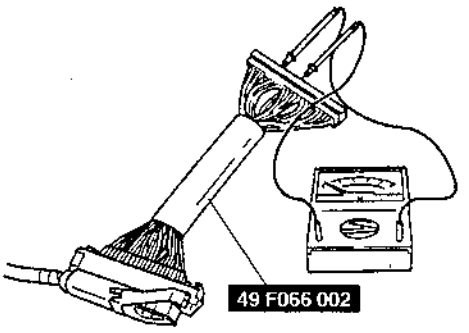

U5U41309

Note

- Voltage is measured between applicable terminal and GND terminal of ABS CM harness connector.

U5U41321

Terminal	Signal name	Connected to	Item	Condition	Specification	Possible cause
A	Voltage supply (System)	IG SW	Voltage	IG SW is at ON	B+	Harness (IG SW — ABS CM connector)
				IG SW is off	0 V	
B	Voltage supply (Relay drive)	HU (motor relay, valve relay coil)	Continuity	B—GND	No	Harness (B — motor relay — valve relay, G — motor relay, B — valve relay) Motor relay Valve relay
				B—A	No	
			Resistance	B—G	72—88 Ω	
				B—AK	93—113 Ω	
G	Motor relay drive	HU (motor relay coil)	Continuity	G—GND	No	Harness (B — motor relay — valve relay, G — motor relay, B — valve relay) Motor relay Valve relay
				G—A	No	
			Resistance	B—G	72—88 Ω	
AK	Valve relay drive	HU (valve relay coil)	Continuity	AK—GND	No	Harness (B — motor relay — valve relay, G — motor relay, B — valve relay) Motor relay Valve relay
				AK—A	No	
			Resistance	B—AK	93—113 Ω	
P	On-board diagnosis TBS	Data link connector TBS	Continuity	P—GND	No	Harness (P — TBS at DLC)
				P—A	No	
				P—TBS at DLC	Yes	
AT	On-board diagnosis FBS	Data link connector FBS	Continuity	AT—GND	No	Harness (AT — FBS at DLC)
				AT—A	No	
				AT—FBS at DLC	Yes	
X	Motor monitor	HU (ABS motor)	Voltage	When B+ applied between B and G	B+	Harness (B — motor relay — G, motor relay — battery, X — motor relay — motor, motor — motor GND) Motor Motor relay
				When open between B and G	0 V	
			Continuity	X—GND	Yes	

Terminal	Signal name	Connected to	Item	Condition	Specification	Possible cause
AB, AC, AM	System GND	Ground point	Continuity	AB—ground point	Yes	Harness (Each terminal — ground point)
				AC—ground point	Yes	
				AM—ground point	Yes	
				AB—AD, AC—AD	Yes	Short plate of harness connector
				AM—AD	Yes	
AD	Warning light	ABS warning light	Continuity	AD—GND (IG is off)	Yes	Harness (AD — meter, meter — IG SW) Meter
				AD—A (IG is off)	Yes	
			Voltage	When IG SW is at ON	B+	
AV	Brake switch	Brake switch	Voltage	When brake pedal depressed	B+	Harness (AV — brake SW) (When brake light normal)
				When brake pedal released	0 V	
AJ, J	LF wheel-speed	LF wheel-speed sensor	Voltage	Vehicle stopped	0 V (AC)	Harness (sensor — ABS CM harness connector) Sensor, Installation condition
				When turned 1 revolution per second	0.25—1.2 V (AC)	
			Resistance	AJ—J	1.4—1.8 kΩ	
O, N	RF wheel-speed	RF wheel-speed sensor	Voltage	Vehicle stopped	0 V (AC)	Harness (sensor — ABS CM harness connector) Sensor, Installation condition
				When turned 1 revolution per second	0.25—1.2 V (AC)	
			Resistance	O—N	1.4—1.8 kΩ	
K, AL	RR wheel-speed	RR wheel-speed sensor	Voltage	Vehicle stopped	0 V (AC)	Harness (sensor — ABS CM harness connector) Sensor, Installation condition
				When turned 1 revolution per second	0.25—1.2 V (AC)	
			Resistance	K—AL	1.4—1.8 kΩ	
AN, L	LR wheel-speed	LR wheel-speed sensor	Voltage	Vehicle stopped	0 V (AC)	Harness (sensor — ABS CM harness connector) Sensor, Installation condition
				When turned 1 revolution per second	0.25—1.2 V (AC)	
			Resistance	AN—L	1.4—1.8 kΩ	
E	Left front solenoid valve (EV) drive	HU (LF solenoid valve)	Voltage	When B+ applied between B and AK	B+	Harness (B — motor relay — AK, valve relay — battery, valve relay — solenoid Each terminal — solenoid valve) Valve relay Solenoid valve
			Continuity	E—GND	No	
				E—A	No	
AG	Left front solenoid valve (AV) drive	HU (LF solenoid valve)	Voltage	When B+ applied between B and AK	B+	
			Continuity	AG—GND	No	
				AG—A	No	
BB	Right front solenoid valve (EV) drive	HU (RF solenoid valve)	Voltage	When B+ applied between B and AK	B+	
			Continuity	BB—GND	No	
				BB—A	No	
Z	Right front solenoid valve (AV) drive	HU (RF solenoid valve)	Voltage	When B+ applied between B and AK	B+	
			Continuity	Z—GND	No	
				Z—A	No	
BA	Rear solenoid valve (EV) drive	HU (Rear solenoid valve)	Voltage	When B+ applied between B and AK	B+	
			Continuity	BA—GND	No	
				BA—A	No	
Y	Rear solenoid valve (AV) drive	HU (Rear solenoid valve)	Voltage	When B+ applied between B and AK	B+	
			Continuity	Y—GND	No	
				Y—A	No	

ABS RELAY REMOVAL/INSTALLATION

X5U413W05

1. Remove the ABS hydraulic unit.
2. Remove in the order indicated in the table.
3. Install in the reverse order of removal.

1	Cover
2	Motor relay
3	Valve relay

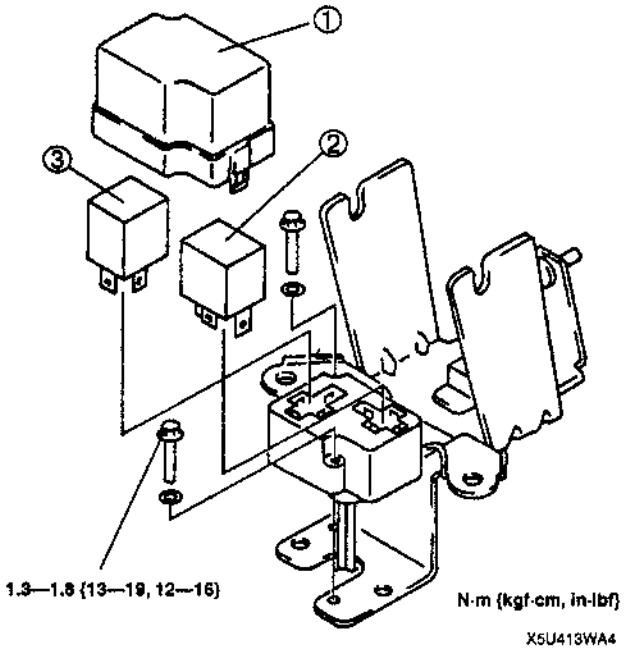

ABS RELAY INSPECTION

X5U413W06

Valve Relay Inspection (Including Harness To ABS Control Module)

1. Turn the ignition switch off and disconnect the ABS control module connector.
2. Connect the **SST** to the ABS control module connector.

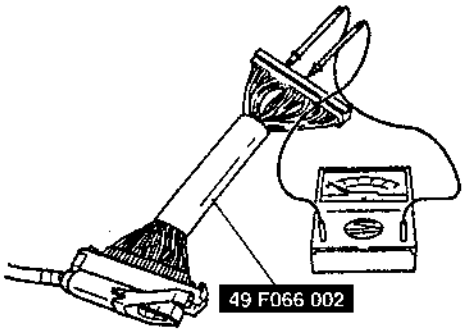

U5U41311

3. Turn the ignition switch to ON.
4. Measure the voltage between the ground terminal AB and the following terminals of the ABS control module connector.

Terminal: E, Z, Y, AG, BA, BB Voltage
0 V

5. Apply 12 V to terminal B and ground terminal AK. Measure the voltage between the ground terminal AB and the following terminals of the ABS control module connector.

Terminal: E, Z, Y, AG, BA, BB Voltage
B+

6. If not as specified, inspect the wiring harness and the valve relay.

Valve Relay Inspection

1. Using an ohmmeter, inspect for continuity of the relay terminals.

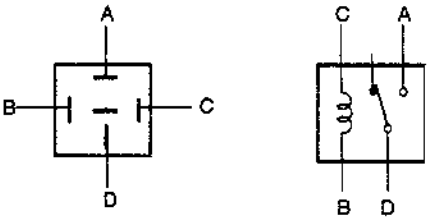

U5U41315

○—○ : Continuity

Connect to		A	B	C	D
B+	Ground				
—	—		○	○	
B	C	○			○

U5U41313

2. If not as specified, replace the valve relay.

Motor Relay Inspection (Including Harness To ABS Control Module)

1. Turn the ignition switch off and disconnect the ABS control module connector.
2. Connect the **SST** to the ABS control module connector.

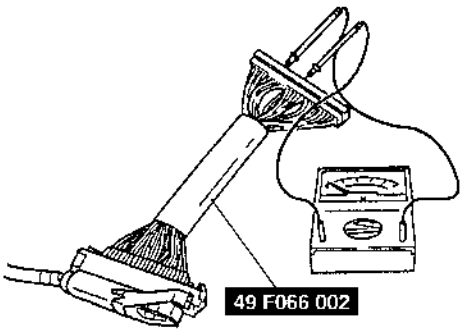

U5U41314

3. Turn the ignition switch to ON.
4. Measure the voltage between terminal X and AB of the ABS control module connector.

   Voltage
   0 V

5. Apply B+ to terminal B and ground terminal G. Measure the voltage between terminal X and AB of the ABS control module connector.

   Voltage
   B+

6. If not as specified, inspect the wiring harness and the motor relay.

Motor Relay Inspection

1. Using an ohmmeter, inspect for continuity of the relay terminals.

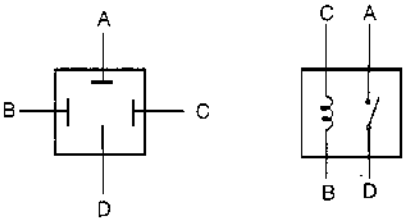

U5U41312

○—○ : Continuity

Connect to		A	B	C	D
B+	Ground				
—	—		○—○		
C	B	○			○

U5U41316

2. If not as specified, replace the motor relay.

FRONT ABS WHEEL-SPEED SENSOR REMOVAL/INSTALLATION

X5U413W07

1. Remove in the order indicated in the table.
2. Install in the reverse order of removal.

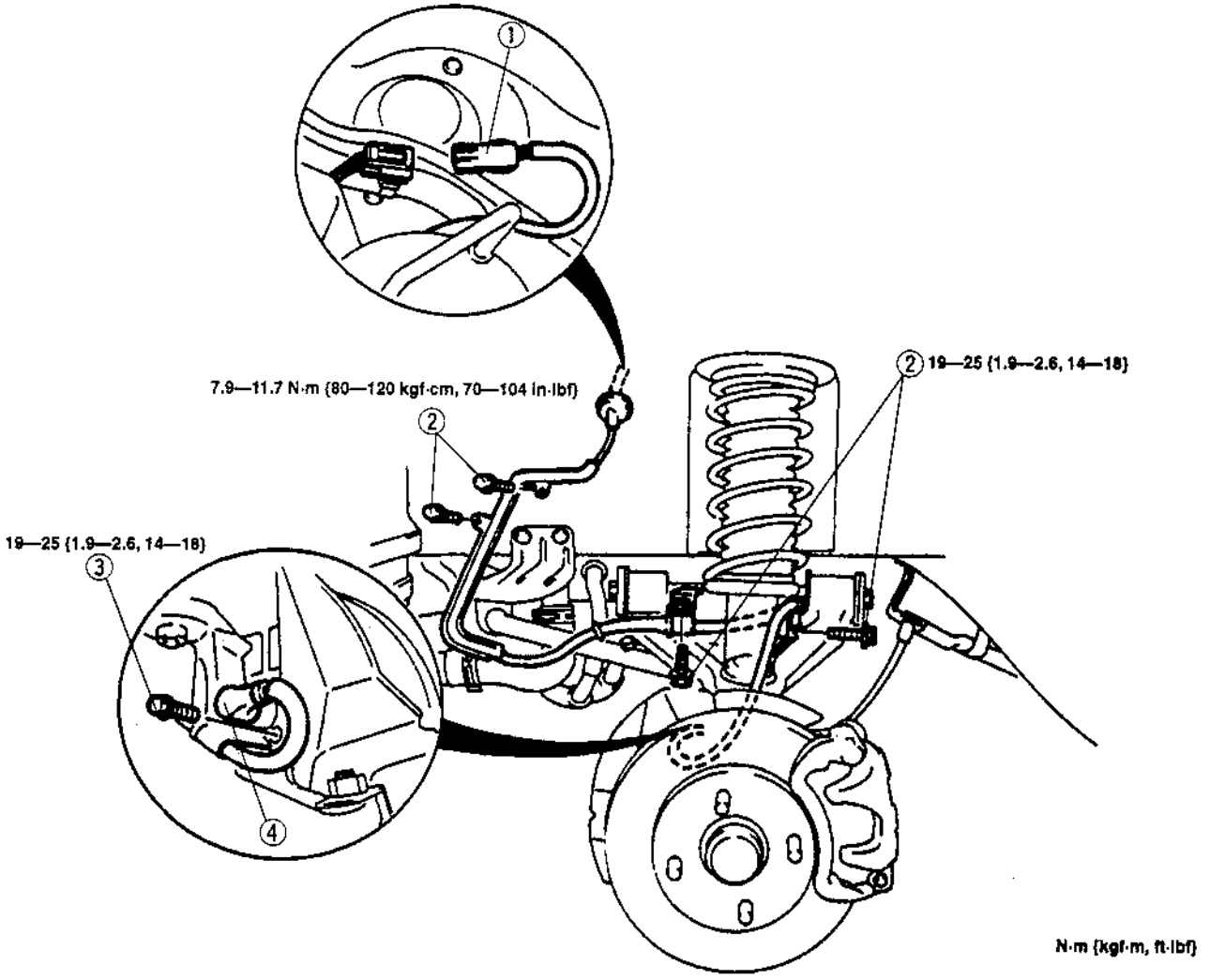

1	Connector
2	Bolts

3	Bolt
4	ABS wheel-speed sensor

FRONT ABS WHEEL-SPEED SENSOR INSPECTION

X5U413W08

Clearance Inspection

1. Remove the wheel and tire, and inspect the sensor for looseness and damage. Replace the sensor as necessary.
2. Verify the clearance between the ABS wheel-speed sensor and the sensor rotor.

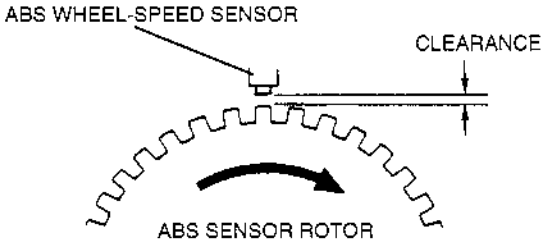

U5U413'8

Clearance
0.3—1.1 mm {0.012—0.043 in}

3. If not as specified, replace the ABS wheel-speed sensor or sensor rotor as necessary.

Resistance Inspection

1. Disconnect the ABS wheel-speed sensor connector.
2. Inspect for resistance at the ABS wheel-speed sensor.

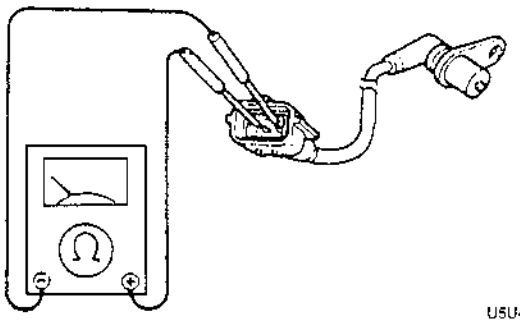

U5U41319

Resistance
1.4—1.8 kΩ

Voltage Inspection

1. On level ground, jack up the vehicle and support it evenly on safety stands.
2. Disconnect the ABS wheel-speed sensor connector.
3. Inspect each wheel by rotating it at one revolution per second.

Voltage
0.25—1.2 V (AC)

4. If not as specified, replace the ABS wheel-speed sensor or sensor rotor as necessary.

REAR ABS WHEEL-SPEED SENSOR REMOVAL/INSTALLATION

X5U413W09

1. Remove in the order indicated in the table.
2. Install in the reverse order of removal.

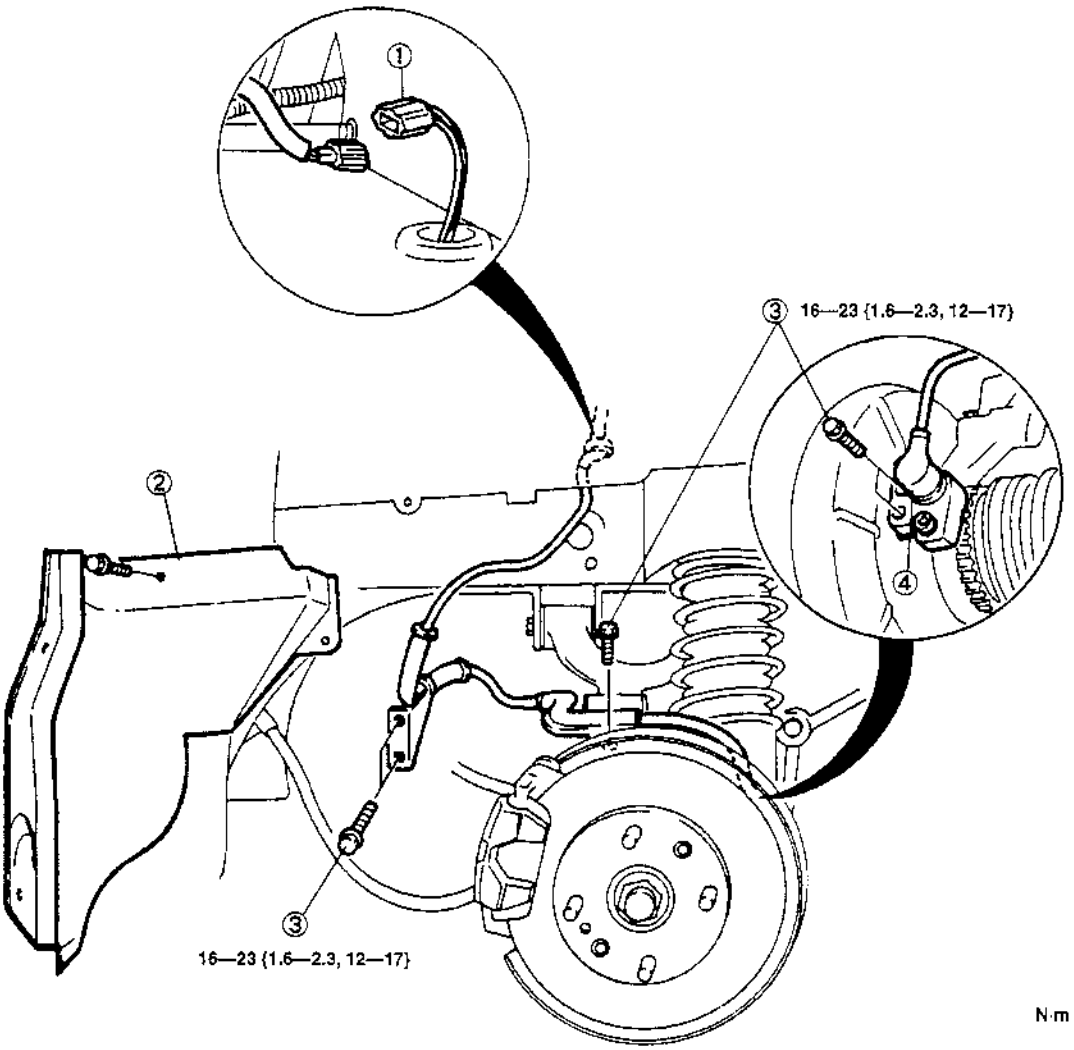

X5U413WA5

1	Connector
2	Mud guard

3	Bolt
4	ABS wheel-speed sensor

REAR ABS WHEEL-SPEED SENSOR INSPECTION

X5U413W10

- Inspect the rear ABS wheel-speed sensor in the same procedure as the front ABS wheel-speed sensor. (Refer to 04–13 FRONT ABS WHEEL-SPEED SENSOR INSPECTION.)

04–50 TECHNICAL DATA

04 BRAKES

X5U450W01

Item			Specification
CONVENTIONAL BRAKE SYSTEM			
Brake pedal	Brake pedal height (mm {in})		171—181 {6.73—7.13}
	Brake pedal play (mm {in})		4.0—8.4 {0.16—0.33}
	Pedal-to-floor clearance (mm {in})		95 {3.74} min.
Power brake unit	Fluid pressure (kPa {kgf/cm^2, psi})	At 0 kPa {0 mmHg, 0 inHg}	1,079—1,177 {11—12, 156—171}
		At 66.7 kPa {500 mmHg, 19.7 inHg}	5,199—5,494 {53—56, 754—796}
Dual proportioning valve	Bend portion (kPa {kgf/cm^2, psi})		3,923 {40, 569}
	Rear wheel pressure when master cylinder pressure is 5,880 kPa {60 kgf/cm^2, 850 psi} (kPa {kgf/cm^2, psi})		4,846 {49.4, 683} ± 392 {4, 57}
Front disc brake	Minimum disc pad thickness (mm {in})		1.0 {0.04}
	Minimum disc plate thickness (mm {in})		18.0 {0.71}
	Disc plate runout limit (mm {in})		0.05 {0.002}
Rear disc brake	Minimum disc pad thickness (mm {in})		1.0 {0.04}
	Minimum disc plate thickness (mm {in})		8.0 {0.31}
	Disc plate runout limit (mm {in})		0.05 {0.002}
Brake fluid	Type		SAE J1703 or FMVSS 116 DOT3
PARKING BRAKE SYSTEM			
Parking brake lever	Lever stroke when pulled at 98 N {10 kgf, 22 lbf} (notches)		5—7
ANTILOCK BRAKE SYSTEM			
ABS wheel-speed sensor	Clearance between sensor and rotor (mm {in})		0.3—1.1 {0.012—0.043}

04–60 SERVICE TOOLS

04 BRAKES SST

X5U460W01

49 0259 770B Flare nut wrench T0259770B	49 F043 001 Adjust gauge TF043001X	49 0221 600C Disc brake expand tool T0221600C
49 0208 701A Boot air out tool T0208701A	49 B043 001 Adjust gauge TB043001X	49 E043 003A Turning lock tool TE043003A
49 B043 004 Socket wrench TB043004X	49 U043 0A0 Oil pressure gauge set TU043000X	49 U043 004 Oil pressure gauge (Part of 49 U043 0A0) TU043004X
49 U043 005 Joint (Part of 49 U043 0A0) TU043005X	49 U043 006 Hose (Part of 49 U043 0A0) TU043006X	49 F066 002 Harness adapter TF066002X
49 T088 0A0 NGS set TT088000X	49 T088 010F Program Card TT088010F	—

TRANSMISSION/TRANSAXLE

05
SECTION

05–01 TROUBLESHOOTING

FOREWORD

X5U501WC1

Before proceeding with the following troubleshooting,
- Refer to section 00–00 to understand the basic troubleshooting procedure.
- Perform the diagnostic trouble code inspection.
- If a diagnostic trouble code is displayed, proceed with inspection steps for the code.
- When the engine can be started, perform "ENGINE TUNE-UP". (Refer to 01–10 ENGINE TUNE-UP.)

AUTOMATIC TRANSMISSION ON-BOARD DIAGNOSTIC

X5U501W02

Diagnostic Trouble Code Inspection
(Refer to 01–01A ENGINE ON-BOARD DIAGNOSTIC.)

After Repair Procedure
(Refer to 01–01A ENGINE ON-BOARD DIAGNOSTIC.)

Diagnostic Trouble Code Table

DTC No.	Condition	MIL	DC	Monitor Item	O/D OFF indicator light
P0102	Mass air flow circuit low input	☞ 01–01A ENGINE ON-BOARD DIAGNOSTIC			
P0103	Mass air flow circuit high input	☞ 01–01A ENGINE ON-BOARD DIAGNOSTIC			
P0106	Barometric pressure circuit performance problem	☞ 01–01A ENGINE ON-BOARD DIAGNOSTIC			
P0107	Barometric pressure circuit low input	☞ 01–01A ENGINE ON-BOARD DIAGNOSTIC			
P0108	Barometric pressure circuit high input	☞ 01–01A ENGINE ON-BOARD DIAGNOSTIC			
P0111	Intake air temperature circuit performance problem	☞ 01–01A ENGINE ON-BOARD DIAGNOSTIC			
P0112	Intake air temperature circuit low input	☞ 01–01A ENGINE ON-BOARD DIAGNOSTIC			
P0113	Intake air temperature circuit high input	☞ 01–01A ENGINE ON-BOARD DIAGNOSTIC			
P0117	Engine coolant temperature circuit input	☞ 01–01A ENGINE ON-BOARD DIAGNOSTIC			
P0118	Engine coolant temperature circuit high input	☞ 01–01A ENGINE ON-BOARD DIAGNOSTIC			
P0122	Throttle position circuit low input	☞ 01–01A ENGINE ON-BOARD DIAGNOSTIC			
P0123	Throttle position circuit high input	☞ 01–01A ENGINE ON-BOARD DIAGNOSTIC			
P0125	Excessive time to enter closed fuel control	☞ 01–01A ENGINE ON-BOARD DIAGNOSTIC			
P0130	Front oxygen sensor circuit malfunction	☞ 01–01A ENGINE ON-BOARD DIAGNOSTIC			
P0134	Front oxygen sensor circuit no activity detected	☞ 01–01A ENGINE ON-BOARD DIAGNOSTIC			
P0138	Rear heated oxygen sensor circuit high input	☞ 01–01A ENGINE ON-BOARD DIAGNOSTIC			
P0140	Rear oxygen sensor circuit no activity detected	☞ 01–01A ENGINE ON-BOARD DIAGNOSTIC			
P0171	Fuel trim system too lean	☞ 01–01A ENGINE ON-BOARD DIAGNOSTIC			
P0172	Fuel trim system too rich	☞ 01–01A ENGINE ON-BOARD DIAGNOSTIC			
P0300	Random misfire detected	☞ 01–01A ENGINE ON-BOARD DIAGNOSTIC			
P0301	Cylinder 1 misfire detected	☞ 01–01A ENGINE ON-BOARD DIAGNOSTIC			
P0302	Cylinder 2 misfire detected	☞ 01–01A ENGINE ON-BOARD DIAGNOSTIC			
P0303	Cylinder 3 misfire detected	☞ 01–01A ENGINE ON-BOARD DIAGNOSTIC			
P0304	Cylinder 4 misfire detected	☞ 01–01A ENGINE ON-BOARD DIAGNOSTIC			
P0325	Knock sensor 1 circuit malfunction	☞ 01–01A ENGINE ON-BOARD DIAGNOSTIC			
P0335	Crankshaft position sensor circuit malfunction	☞ 01–01A ENGINE ON-BOARD DIAGNOSTIC			
P0339	Crankshaft position sensor circuit intermittent	☞ 01–01A ENGINE ON-BOARD DIAGNOSTIC			
P0401	Exhaust gas recalculation flow insufficient detected	☞ 01–01A ENGINE ON-BOARD DIAGNOSTIC			
P0402	Exhaust gas recalculation flow excessive detected	☞ 01–01A ENGINE ON-BOARD DIAGNOSTIC			
P0420	Warm up catalyst system efficiency below threshold (Except California emission regulations applicable model)	☞ 01–01A ENGINE ON-BOARD DIAGNOSTIC			
P0421	Warm up catalyst system efficiency below threshold (California emission regulations applicable model)	☞ 01–01A ENGINE ON-BOARD DIAGNOSTIC			
P0442	Evaporative emission control system malfunction (Leak inspect)	☞ 01–01A ENGINE ON-BOARD DIAGNOSTIC			
P0443	Evaporative emission control system purge control valve circuit malfunction (Equip leak inspect)	☞ 01–01A ENGINE ON-BOARD DIAGNOSTIC			

DTC No.	Condition	MIL	DC	Monitor Item	O/D OFF indicator light
P0446	Evaporative emission control system malfunction (Vent control malfunction)	☞ 01–01A ENGINE ON-BOARD DIAGNOSTIC			
P0452	Evaporative emission control system pressure sensor low input	☞ 01–01A ENGINE ON-BOARD DIAGNOSTIC			
P0453	Evaporative emission control system pressure sensor high input	☞ 01–01A ENGINE ON-BOARD DIAGNOSTIC			
P0455	Evaporative emission control system malfunction (con. leak detected)	☞ 01–01A ENGINE ON-BOARD DIAGNOSTIC			
P0461	Fuel level sensor circuit range/performance	☞ 01–01A ENGINE ON-BOARD DIAGNOSTIC			
P0462	Fuel level sensor circuit low input	☞ 01–01A ENGINE ON-BOARD DIAGNOSTIC			
P0463	Fuel level sensor circuit high input	☞ 01–01A ENGINE ON-BOARD DIAGNOSTIC			
P0500	Vehicle speed sensor malfunction	☞ 01–01A ENGINE ON-BOARD DIAGNOSTIC			
P0506	Idle control system RPM lower than expected	☞ 01–01A ENGINE ON-BOARD DIAGNOSTIC			
P0507	Idle control system RPM higher than expected	☞ 01–01A ENGINE ON-BOARD DIAGNOSTIC			
P0550	P/S pressure switch circuit malfunction	☞ 01–01A ENGINE ON-BOARD DIAGNOSTIC			
P0703	Brake switch input malfunction	☞ 01–01A ENGINE ON-BOARD DIAGNOSTIC			
P0704	Clutch switch input circuit malfunction	☞ 01–01A ENGINE ON-BOARD DIAGNOSTIC			
P0705	Transmission range switch circuit malfunction (AT)	ON	1	CCM	OFF
	Neutral switch circuit malfunction (MT)	☞ 01–01A ENGINE ON-BOARD DIAGNOSTIC			
P0706	Transmission range switch circuit malfunction (Open circuit)	ON	2	CCM	OFF
P0715	Input/turbine speed sensor circuit malfunction	ON	2	CCM	FLASH
P0720	Output speed sensor circuit malfunction	ON	1	CCM	FLASH
P0725	Engine speed input circuit malfunction	ON	2	CCM	OFF
P0741	Torque converter clutch solenoid valve stuck off	ON	2	CCM	OFF
P0742	Torque converter clutch solenoid valve stuck on	ON	2	CCM	OFF
P0751	Shift solenoid A stuck off	ON	2	CCM	OFF
P0752	Shift solenoid A stuck on	ON	2	CCM	OFF
P0756	Shift solenoid B stuck off	ON	2	CCM	OFF
P0757	Shift solenoid B stuck on	ON	2	CCM	OFF
P1102	Mass air flow inconsistent with TVO sensor (Lower than expected)	☞ 01–01A ENGINE ON-BOARD DIAGNOSTIC			
P1103	Mass air flow inconsistent with RPM (Grater than expected)	☞ 01–01A ENGINE ON-BOARD DIAGNOSTIC			
P1122	Throttle position CLOSE stuck	☞ 01–01A ENGINE ON-BOARD DIAGNOSTIC			
P1123	Throttle position OPEN stuck	☞ 01–01A ENGINE ON-BOARD DIAGNOSTIC			
P1135	Front oxygen sensor heater circuit low	☞ 01–01A ENGINE ON-BOARD DIAGNOSTIC			
P1136	Front oxygen sensor heater circuit high	☞ 01–01A ENGINE ON-BOARD DIAGNOSTIC			
P1141	Rear oxygen sensor heater circuit low	☞ 01–01A ENGINE ON-BOARD DIAGNOSTIC			
P1142	Rear oxygen sensor heater circuit high	☞ 01–01A ENGINE ON-BOARD DIAGNOSTIC			
P1170	Heated oxygen sensor (Front) (Inversion)	☞ 01–01A ENGINE ON-BOARD DIAGNOSTIC			
P1345	No SGC signal	☞ 01–01A ENGINE ON-BOARD DIAGNOSTIC			
P1449	Canister drain cut valve (CDCV) open or short	☞ 01–01A ENGINE ON-BOARD DIAGNOSTIC			
P1450	Evaporative emission control system malfunction	☞ 01–01A ENGINE ON-BOARD DIAGNOSTIC			
P1487	EGR boost sensor solenoid valve open or short	☞ 01–01A ENGINE ON-BOARD DIAGNOSTIC			
P1496	EGR valve motor coil 1 open or short	☞ 01–01A ENGINE ON-BOARD DIAGNOSTIC			
P1497	EGR valve motor coil 2 open or short	☞ 01–01A ENGINE ON-BOARD DIAGNOSTIC			
P1498	EGR valve motor coil 3 open or short	☞ 01–01A ENGINE ON-BOARD DIAGNOSTIC			

DTC No.	Condition	MIL	DC	Monitor Item	O/D OFF indicator light
P1499	EGR valve motor coil 4 open or short	☞ 01–01A ENGINE ON-BOARD DIAGNOSTIC			
P1504	Idle air control circuit malfunction	☞ 01–01A ENGINE ON-BOARD DIAGNOSTIC			
P1523	VICS circuit malfunction	☞ 01–01A ENGINE ON-BOARD DIAGNOSTIC			
P1562	PCM +BB voltage low	☞ 01–01A ENGINE ON-BOARD DIAGNOSTIC			
P1601	Communication line error (ECM-TCM)	☞ 01–01A ENGINE ON-BOARD DIAGNOSTIC			
P1608	PCM internal circuit malfunction	☞ 01–01A ENGINE ON-BOARD DIAGNOSTIC			
P1609	PCM internal circuit malfunction (knock sensor circuit)	☞ 01–01A ENGINE ON-BOARD DIAGNOSTIC			
P1631	Generator output voltage signal no electricity	☞ 01–01A ENGINE ON-BOARD DIAGNOSTIC			
P1632	Battery voltage monitor signal circuit malfunction	☞ 01–01A ENGINE ON-BOARD DIAGNOSTIC			
P1633	Battery overcharge	☞ 01–01A ENGINE ON-BOARD DIAGNOSTIC			
P1634	Generator terminal B circuit open	☞ 01–01A ENGINE ON-BOARD DIAGNOSTIC			
P1740	Torque converter clutch solenoid valve open	ON	1	CCM	FLASH
P1742	Torque converter clutch solenoid valve short	ON	1	CCM	FLASH
P1751	Shift solenoid A circuit open	ON	1	CCM	FLASH
P1752	Shift solenoid A circuit short	ON	1	CCM	FLASH
P1756	Shift solenoid B circuit open	ON	1	CCM	FLASH
P1757	Shift solenoid B circuit short	ON	1	CCM	FLASH
P1771	Throttle position sensor open	ON	1	CCM	FLASH
P1772	Throttle position sensor short	ON	1	CCM	FLASH

Diagnostic Trouble Code Troubleshooting

DTC P0705 DTC P0706	Transmission range switch circuit malfunction Transmission range switch circuit malfunction (Open circuit)
DETECTION CONDITION	No input signal or input of two or more signals from transmission range switch.
POSSIBLE CAUSE	• Transmission range switch • Damaged wiring or connectors between transmission range switch and TCM • TCM malfunction

STEP	INSPECTION		ACTION
1	Have FREEZE FRAME PID DATA been recorded?	Yes	Go to next step.
		No	Record FREEZE FRAME PID DATA on repair order, then go to next step.
2	Are TCM and transmission range switch connections at the connectors for and connector pins okay?	Yes	Go to next step.
		No	Repair or replace connector, then go to step 8.
3	Measure terminal voltage at terminals A, B, C, D, and F of TCM as follows. Is terminal voltage as specified? ☞ 05–13 TRANSMISSION CONTROL MODULE INSPECTION	Yes	Go to step 8.
		No	Adjust the transmission range switch. ☞ 05–13 TRANSMISSION RANGE SWITCH ADJUSTMENT. If terminal voltage are okay? Go to next step.
4	Inspect for continuity between terminals of transmission range switch and TCM. • Disconnect negative battery cable. • Disconnect transmission range switch and TCM connectors. Is there continuity between terminals?	Yes	Go to next step.
		No	Repair or replace connectors and wiring, then go to step 8.
5	Inspect for continuity between terminals of transmission range switch as follows. • Disconnect negative battery cable. • Disconnect transmission range switch connector. Is there continuity between the terminals? ☞ 05–13 TRANSMISSION RANGE SWITCH INSPECTION, Inspection of Continuity.	Yes	Go to next step.
		No	Replace transmission range switch, then go to step 8. ☞ 05–13 TRANSMISSION RANGE SWITCH REMOVAL/INSTALLATION
6	Inspect for continuity between terminals of transmission range switch and METER FUSE. • Disconnect negative battery cable. • Disconnect transmission range switch and METER FUSE. Is there continuity between terminals?	Yes	Go to next step.
		No	Repair or replace connectors and wiring, then go to step 8.
7	Erase diagnostic trouble code from memory. Is same code No. present after performing "After Repair Procedure"?	Yes	Return to step 2.
		No	Intermittent or poor connection of harness or connector. Repair connector and/or harness, then go to next step.
8	Erase diagnostic trouble code from memory. Can code be output after performing "After Repair Procedure"?	Yes	Go to appropriate inspection procedure. **Note** • If the malfunction remains even though all inspections have been performed, get assistance from Technical Hotline.
		No	Troubleshooting completed.

DTC P0715	Input/turbine speed sensor circuit malfunction
DETECTION CONDITION	Signal from input/turbine speed sensor is not input to TCM when vehicle is moving.
POSSIBLE CAUSE	• Input/turbine speed sensor malfunction • Damaged harness or connectors between input/turbine speed sensor and TCM • TCM malfunction

STEP	INSPECTION		ACTION
1	Have FREEZE FRAME PID DATA been recorded?	Yes	Go to next step.
		No	Record FREEZE FRAME PID DATA on repair order, then go to next step.
2	Are TCM and input/turbine speed sensor connections at the connectors and connector pins okay?	Yes	Go to next step.
		No	Repair or replace connector, then go to step 7.
3	Measure terminal voltage at terminal W and Z of TCM as follows. Is terminal voltage as specified? ☞ 05–13 TRANSMISSION CONTROL MODULE INSPECTION.	Yes	Go to step 7.
		No	Go to next step.
4	Inspect for continuity between terminals of input/turbine speed sensor and TCM. • Disconnect negative battery cable. • Disconnect input/turbine speed sensor and TCM connectors. Is there continuity between terminals?	Yes	Go to next step.
		No	Repair or replace connectors and wiring, then go to step 7.
5	Measure resistance between input/turbine speed sensor terminals. • Disconnect negative battery cable. • Disconnect input/turbine speed sensor connector. Is resistance between terminals correct? ☞ 05–13 INPUT/TURBINE SPEED SENSOR INSPECTION.	Yes	Go to next step.
		No	Replace input/turbine speed sensor, then go to step 7. ☞ 05–13 INPUT/TURBINE SPEED SENSOR REMOVAL/INSTALLATION.
6	Erase diagnostic trouble code from memory. Is same code No. present after performing "After Repair Procedure"?	Yes	Return to step 2.
		No	Intermittent or poor connection of harness or connector. Repair connector and/or harness, then go to next step.
7	Erase diagnostic trouble code from memory. Can code be output after performing "After Repair Procedure"?	Yes	Go to appropriate inspection procedure. **Note** • If the malfunction remains even though all inspections have been performed, get assistance from Technical Hotline.
		No	Troubleshooting completed.

DTC P0720	Output speed sensor circuit malfunction
DETECTION CONDITION	Signal from output speed sensor is not input to TCM when vehicle is moving.
POSSIBLE CAUSE	• Output speed sensor malfunction • Damaged harness or connector between output speed sensor and TCM • TCM malfunction

STEP	INSPECTION		ACTION
1	Have FREEZE FRAME PID DATA been recorded?	Yes	Go to next step.
		No	Record FREEZE FRAME PID DATA on repair order, then go to next step.
2	Are TCM and output speed sensor connections at the connectors and connector pins okay?	Yes	Go to next step.
		No	Repair or replace connector, then go to step 7.
3	Measure terminal voltage at terminals AF and AE of TCM as follows. Is terminal voltage as specified? ☞ 05–13 TRANSMISSION CONTROL MODULE INSPECTION.	Yes	Go to step 7.
		No	Go to next step.
4	Inspect for continuity between terminals of output speed sensor and TCM. • Disconnect negative battery cable. • Disconnect TCM and output speed sensor connectors. Is there continuity between terminals?	Yes	Go to next step.
		No	Repair or replace connectors and wiring, then go to step 7.
5	Measure resistance between output speed sensor terminals. • Disconnect negative battery cable. • Disconnect output speed sensor connector. Is resistance between terminal correct? ☞ 05–13 OUTPUT SPEED SENSOR INSPECTION.	Yes	Go to next step.
		No	Replace output speed sensor, then go to step 7. ☞ 05–13 OUTPUT SPEED SENSOR REMOVAL/INSTALLATION.
6	Erase diagnostic trouble code from memory. Is same code No. present after performing "After Repair Procedure"?	Yes	Return to step 2.
		No	Problem is a temporary slip of clutch and should be investigated further. Go to next step.
7	Erase diagnostic trouble code from memory. Can code be output after performing "After Repair Procedure"?	Yes	Go to appropriate inspection procedure. **Note** • If the malfunction remains even though all inspections have been performed, get assistance from Technical Hotline.
		No	Troubleshooting completed.

DTC P0725	Engine speed input circuit signal
DETECTION CONDITION	Signal from engine speed input signal is not input to TCM from PCM.
POSSIBLE CAUSE	• Damaged harness or connectors between TCM and PCM • PCM malfunction • TCM malfunction

STEP	INSPECTION		ACTION
1	Have FREEZE FRAME PID DATA been recorded?	Yes	Go to next step.
		No	Record FREEZE FRAME PID DATA on repair order, then go to next step.
2	Is diagnostic trouble code P0335 indicated? ☞ 01–01A ENGINE ON-BOARD DIAGNOSTIC.	Yes	Refer to flowchart for diagnostic trouble code P0335 and perform troubleshooting. ☞ 01–01A ENGINE ON-BOARD DIAGNOSTIC.
		No	Go to next step.
3	Are TCM and PCM connections at the connectors and connector pins okay?	Yes	Go to next step.
		No	Repair or replace connector, then go to step 8.
4	Measure terminal voltage at terminal AG of TCM as follows. Is terminal voltage as specified? ☞ 05–13 TRANSMISSION CONTROL MODULE INSPECTION.	Yes	Go to step 8.
		No	Go to next step.
5	Inspect for continuity between terminals of PCM and TCM. • Disconnect negative battery cable. • Disconnect TCM and PCM connectors. Is there continuity between terminals?	Yes	Go to next step.
		No	Repair or replace connectors and wiring, then go to step 8.
6	Inspect the value of the following PIDs using the NGS tester. ☞ 01–40 POWERTRAIN CONTROL MODULE (PCM) INSPECTION. Is PID value okay?	Yes	Go to next step.
		No	Inspect PCM. ☞ 01–40 POWERTRAIN CONTROL MODULE (PCM) INSPECTION.
7	Erase diagnostic trouble code from memory. Is same code No. present after performing "After Repair Procedure"?	Yes	Return to step 2.
		No	Problem is a temporary slip of clutch and should be investigated further, then go to next step.
8	Erase diagnostic trouble code from memory. Can code be output after performing "After Repair Procedure"?	Yes	Go to appropriate inspection procedure. **Note** • If the malfunction remains even though all inspections have been performed, get assistance from Technical Hotline.
		No	Troubleshooting completed.

DTC P0741 DTC P0742	**Torque converter clutch solenoid valve stuck off** **Torque converter clutch solenoid valve stuck on**
DETECTION CONDITION	• TCM outputs torque converter clutch signal, but no torque converter clutch is obtained. • TCM does not output torque converter clutch signal, but torque converter clutch is obtained.
POSSIBLE CAUSE	• TCM malfunction • Torque converter clutch solenoid valve malfunction • Control valve body malfunction • Torque converter clutch malfunction • ATF level is low. • Line pressure is low.

STEP	INSPECTION		ACTION
1	Have FREEZE FRAME PID DATA been recorded?	Yes	Go to next step.
		No	Record FREEZE FRAME PID DATA on repair order, then go to next step.
2	Are amount and condition (color) of ATF okay? Inspect ATF leakage at transmission connection and gasket. Color ① Transparent red: Normal ② Black: Defective part in powertrain ③ Light red: Water mixed in fluid ④ Reddish brown: Deteriorated ATF	Yes	Go to next step.
		No	Adjust ATF amount or replace ATF if necessary. • If ATF color is black, measure line pressure at idle when pressure is less than specification, then repair or replace any defective parts. • If ATF color is light red or reddish brown, replace ATF.
3	Inspect operation of solenoid valve. • Disconnect negative battery cable. • Disconnect solenoid connector. Is it operating okay? ☞ 05–13 SOLENOID VALVES INSPECTION, Operating Inspection.	Yes	Go to step 6.
		No	Replace torque converter clutch solenoid valve, then go to step 6. ☞ 05–13 SOLENOID VALVES REMOVAL/INSTALLATION.
4	Inspect operation of each valve and inspect return spring. Is each valve operating okay and is return spring okay?	Yes	Go to next step.
		No	Repair or replace control valve and replace return spring, then go to step 6.
5	Erase diagnostic trouble code from memory. Is same code No. present after performing "After Repair Procedure"?	Yes	Return to step 3.
		No	Problem is a temporary slip of clutch and should be investigated further, then go to next step.
6	Erase diagnostic trouble code from memory. Can code be output after performing "After Repair Procedure"?	Yes	Go to appropriate inspection procedure. **Note** • If the malfunction remains even though all inspections have been performed, get assistance from Technical Hotline.
		No	Troubleshooting completed.

DTC P0751 **DTC P0752**	**Shift solenoid A stuck off** **Shift solenoid A stuck on**
DETECTION CONDITION	The gear ratio programmed into the memory of the TCM differs from the gear ratio calculated from input/turbine speed sensor input revolution speed and output speed sensor input revolution speed.
POSSIBLE CAUSE	• ATF level is low. • Solenoid valve malfunction • Line pressure is low. • Control valve is stuck. • TCM malfunction

STEP	INSPECTION		ACTION
1	Have FREEZE FRAME PID DATA been recorded?	Yes	Go to next step.
		No	Record FREEZE FRAME PID DATA on repair order, then go to next step.
2	Are amount and condition (color) of ATF okay? Inspect ATF leakage at transmission connection and gasket. Color ① Transparent red: Normal ② Black: Defective part in powertrain ③ Light red: Water mixed in fluid ④ Reddish brown: Deteriorated ATF	Yes	Go to next step.
		No	Adjust ATF amount or replace ATF if necessary. • If ATF color is black, measure line pressure at idle when pressure is less than specification, then repair or replace any defective parts. • If ATF color is light red or reddish brown, replace ATF.
3	Inspect operation of shift solenoid A. • Disconnect negative battery cable. • Disconnect solenoid connector. Is it operating okay? ☞ 05–13 SOLENOID VALVES INSPECTION, Operating Inspection.	Yes	Go to next step.
		No	Replace shift solenoid A, then go to step 6. ☞ 05–13 SOLENOID VALVES REMOVAL/INSTALLATION
4	Inspect operation of each valve and inspect return spring. Is each valve operating okay and is return spring okay?	Yes	Go to next step.
		No	Repair or replace control valve and replace return spring, then go to step 6.
5	Erase diagnostic trouble code from memory. Is same code No. present after performing "After Repair Procedure"?	Yes	Return to step 3.
		No	Problem is a temporary slip of clutch and should be investigated further, then go to next step.
6	Erase diagnostic trouble code from memory. Can code be output after performing "After Repair Procedure"?	Yes	Go to appropriate inspection procedure. **Note** • If the malfunction remains even though all inspections have been performed, get assistance from Technical Hotline.
		No	Troubleshooting completed.

DTC P0756 DTC P0757	Shift solenoid B stuck off Shift solenoid B stuck on
DETECTION CONDITION	The gear ratio programmed into memory of the TCM differs from the gear ratio calculated from input/turbine speed sensor input revolution speed and output speed sensor input revolution speed.
POSSIBLE CAUSE	• ATF level is low. • Solenoid valve malfunction • Line pressure is low. • Control valve is stuck. • TCM malfunction

STEP	INSPECTION		ACTION
1	Have FREEZE FRAME PID DATA been recorded?	Yes	Go to next step.
		No	Record FREEZE FRAME PID DATA on repair order, then go to next step.
2	Are amount and condition (color) of ATF okay? Inspect ATF leakage at transmission connection and gasket. Color ① Transparent red: Normal ② Black: Defective part in powertrain ③ Light red: Water mixed in fluid ④ Reddish brown: Deteriorated ATF	Yes	Go to next step.
		No	Adjust ATF amount or replace ATF if necessary. • If ATF color is black, measure line pressure at idle when pressure is less than specification, then repair or replace any defective parts. • If ATF color is light red or reddish brown, replace ATF.
3	Inspect operation of solenoid valve. • Disconnect negative battery cable. • Disconnect solenoid connector. Is it operating okay? ☞ 05–13 SOLENOID VALVES INSPECTION, Operating Inspection.	Yes	Go to next step.
		No	Replace torque converter clutch control solenoid valve, then go to step 6. ☞ 05–13 SOLENOID VALVES REMOVAL/INSTALLATION.
4	Inspect operation of each valve and inspect return spring. Is each valve operating okay and is return spring okay?	Yes	Go to next step.
		No	Repair or replace control valve and replace return spring, then go to step 6.
5	Erase diagnostic trouble code from memory. Is same code No. present after performing "After Repair Procedure"?	Yes	Return to step 3.
		No	Problem is a temporary slip of clutch and should be investigated further, go to next step.
6	Erase diagnostic trouble code from memory. Can code be output after performing "After Repair Procedure"?	Yes	Go to appropriate inspection procedure. **Note** • If the malfunction remains even though all inspections have been performed, get assistance from Technical Hotline.
		No	Troubleshooting completed.

DTC P1740 **DTC P1742**	**Torque converter clutch control solenoid valve open** **Torque converter clutch control solenoid valve short**
DETECTION CONDITION	• Damaged wiring or connectors between torque converter clutch solenoid valve and TCM • Short or open circuit in torque converter clutch solenoid valve • Short or open circuit in TCM internal transistor
POSSIBLE CAUSE	• Damaged wiring or connector between torque converter clutch solenoid valve and TCM • Short or open circuit in torque converter clutch solenoid valve • Short or open circuit in TCM internal transistor

STEP	INSPECTION		ACTION
1	Have FREEZE FRAME PID DATA been recorded?	Yes	Go to next step.
		No	Record FREEZE FRAME PID DATA on repair order, then go to next step.
2	Are TCM and torque converter clutch solenoid valve connections at connector and connector pins okay.?	Yes	Go to next step.
		No	Repair or replace connector, then go to step 7.
3	Measure terminal voltage at terminal AO of TCM as follows. ☞ 05–13 TRANSMISSION CONTROL MODULE INSPECTION	Yes	Go to step 9.
		No	Go to next step.
4	Measure resistance at TCM terminal and body ground. • Disconnect negative battery cable. • Disconnect the TCM connector. Is resistance correct?	Yes	Go to step 9.
		No	Go to next step.
5	Inspect continuity between terminals of solenoid connector and TCM. • Disconnect negative battery cable. • Disconnect solenoid connector and TCM connector. Is there continuity between terminals?	Yes	Go to next step.
		No	Repair or replace connectors and wiring, then go to step 9.
6	Inspect continuity between terminals of torque converter clutch solenoid valve and wiring. • Disconnect the negative battery cable. • Disconnect the torque converter clutch solenoid valve connector. Is there continuity between terminals?	Yes	Go to next step.
		No	Repair or replace connector and wiring, then go to step 9.
7	Measure resistance at torque converter clutch solenoid valve terminal. • Disconnect negative battery cable. • Disconnect solenoid connector. Is resistance correct? ☞ 05–13 SOLENOID VALVES INSPECTION, Inspection of Resistance.	Yes	Go to next step.
		No	Replace torque converter clutch solenoid valve, then go to step 9. ☞ 05–13 SOLENOID VALVES REMOVAL/INSTALLATION
8	Erase diagnostic trouble code from memory. Is same code No. present after performing "After Repair Procedure"?	Yes	Return to step 2.
		No	Problem is a temporary poor connection of wiring or connectors and should be investigated further, then go to next step.
9	Erase diagnostic trouble code from memory. Can code be output after performing "After Repair Procedure"?	Yes	Go to appropriate inspection procedure. **Note** • If the malfunction remains even though all inspections have been performed, get assistance from Technical Hotline.
		No	Troubleshooting completed.

DTC P1751 DTC P1752	Shift solenoid A circuit open Shift solenoid A circuit short
DETECTION CONDITION	• Damaged wiring or connectors between shift solenoid A and TCM. • Short or open circuit in shift solenoid A • Short or open circuit in TCM internal transistors
POSSIBLE CAUSE	• Damaged wiring or connectors between shift solenoid A and TCM • Short or open circuit in shift solenoid A • Short or open circuit in TCM internal transistors

STEP	INSPECTION		ACTION
1	Have FREEZE FRAME PID DATA been recorded?	Yes	Go to next step.
		No	Record FREEZE FRAME PID DATA on repair order, then go to next step.
2	Are TCM and shift solenoid A connections at connector and connector pins okay?	Yes	Go to next step.
		No	Repair or replace connector, then go to step 9.
3	Measure terminal voltage at terminal AQ of TCM as follows. Is terminal voltage as specified? ☞ 05–13 TRANSMISSION CONTROL MODULE INSPECTION.	Yes	Go to step 9.
		No	Go to next step.
4	Measure resistance at TCM terminal and body ground. • Disconnect negative battery cable. • Disconnect the TCM connector. Is resistance correct?	Yes	Go to step 9.
		No	Go to next step.
5	Inspect continuity between terminals of solenoid connector and TCM. • Disconnect negative battery cable. • Disconnect solenoid connector and TCM connector. Is there continuity between terminals?	Yes	Go to next step.
		No	Repair or replace connectors and wiring, then go to step 9.
6	Inspect for continuity between terminals of shift solenoid A and TCM. • Disconnect negative battery cable. • Disconnect solenoid connector and TCM connector. Is there continuity between terminals?	Yes	Go to next step.
		No	Repair or replace connectors and wiring, then go to step 9.
7	Measure resistance at shift solenoid A terminal. • Disconnect negative battery cable. • Disconnect solenoid connector. Is resistance correct? ☞ 05–13 SOLENOID VALVES INSPECTION, Inspection of Resistance.	Yes	Go to next step.
		No	Replace shift solenoid A, then go to step 9. ☞ 05–13 SOLENOID VALVES REMOVAL/INSTALLATION.
8	Erase diagnostic trouble code from memory. Is same code No. present after performing "After Repair Procedure"?	Yes	Return to step 2.
		No	Intermittent or poor connection of harness or connector. Repair connector and/or harness, then go to next step.
9	Erase diagnostic trouble code from memory. Can code be output after performing "After Repair Procedure"?	Yes	Go to appropriate inspection procedure. **Note** • If the malfunction remains even though all inspections have been performed, get assistance from Technical Hotline.
		No	Troubleshooting completed.

DTC P1756 DTC P1757	Shift solenoid B circuit open Shift solenoid B circuit short
DETECTION CONDITION	• Damaged wiring or connectors between shift solenoid B and TCM • Short or open circuit in shift solenoid B • Short or open circuit in TCM internal transistor
POSSIBLE CAUSE	• Damaged wiring or connectors between shift solenoid B and TCM • Short or open circuit in shift solenoid B • Short or open circuit in TCM internal transistor

STEP	INSPECTION		ACTION
1	Have FREEZE FRAME PID DATA been recorded?	Yes	Go to next step.
		No	Record FREEZE FRAME PID DATA on repair order, then go to next step.
2	Are TCM and shift solenoid B connection at connectors and connector pins okay?	Yes	Go to next step.
		No	Repair or replace connector, then go to step 9.
3	Measure terminal voltage at terminal AN of TCM as follows. Is terminal voltage as specified? ☞ 05–13 TRANSMISSION CONTROL MODULE INSPECTION.	Yes	Go to step 9.
		No	Go to next step.
4	Measure resistance at TCM terminal and body ground. • Disconnect negative battery cable. • Disconnect the TCM connector. Is resistance correct?	Yes	Go to step 9.
		No	Go to next step.
5	Inspect continuity between terminals of solenoid connector and TCM. • Disconnect negative battery cable. • Disconnect solenoid connector and TCM connector. Is there continuity between terminals?	Yes	Go to next step.
		No	Repair or replace connectors and wiring, then go to step 9.
6	Inspect for continuity between terminals of shift solenoid B and TCM. • Disconnect negative battery cable • Disconnect solenoid connector and TCM connector. Is there continuity between terminals?	Yes	Go to next step.
		No	Repair or replace connectors and wiring, then go to step 9.
7	Measure resistance at shift solenoid B terminal. • Disconnect negative battery cable. • Disconnect solenoid connector. Is resistance correct? ☞ 05–13 SOLENOID VALVES INSPECTION, Inspection of Resistance.	Yes	Go to next step.
		No	Replace shift solenoid B, then go to step 9. ☞ 05–13 SOLENOID VALVES REMOVAL/INSTALLATION.
8	Erase diagnostic trouble code from memory. Is same code No. present after performing "After Repair Procedure"?	Yes	Return to step 2.
		No	Intermittent or poor connection of harness or connector. Repair connector and/or harness, then go to next step.
9	Erase diagnostic trouble code from memory. Can code be output after performing "After Repair Procedure"?	Yes	Go to appropriate inspection procedure. **Note** • If the malfunction remains even though all inspections have been performed, get assistance from Technical Hotline.
		No	Troubleshooting completed.

DTC P1771 DTC P1772	Throttle position sensor open Throttle position sensor short
DETECTION CONDITION	The throttle position sensor voltage is less than 0.14 V or more than 4.78 V.
POSSIBLE CAUSE	• Throttle position sensor malfunction • PCM malfunction • Damaged wiring or connector between PCM and throttle position sensor • Damaged wiring or connector between TCM and throttle position sensor

STEP	INSPECTION		ACTION
1	Have FREEZE FRAME PID DATA been recorded?	Yes	Go to next step.
		No	Record FREEZE FRAME PID DATA on repair order, then go to next step.
2	Is diagnostic trouble code P0122 indicated? ☞ 01–01A ENGINE ON-BOARD DIAGNOSTIC	Yes	Refer to flowchart for diagnostic trouble code P0122, and perform troubleshooting. ☞ 01–01A ENGINE ON-BOARD DIAGNOSTIC
		No	Go to next step.
3	Are TCM and throttle position sensor connections at connectors and connector pins okay?	Yes	Go to next step.
		No	Repair or replace connector, then go to step 7.
4	Measure the terminal voltage at terminal R and U of TCM as follows. Is terminal voltage as specified? ☞ 05–13 TRANSMISSION CONTROL MODULE INSPECTION.	Yes	Go to step 7.
		No	Go to next step.
5	Inspect for continuity between terminals of throttle position sensor and TCM. • Disconnect negative battery cable. • Disconnect solenoid connector and TCM connector. Is there continuity between terminals?	Yes	Go to next step.
		No	Repair or replace connectors and wiring, then go to step 7.
6	Erase diagnostic trouble code from memory. Is same code No. present after performing "After Repair Procedure"?	Yes	Return to step 2.
		No	Intermittent poor connection of harness or connector. Repair connector and/or harness, then go to next step.
7	Erase diagnostic trouble code from memory. Can code be output after performing "After Repair Procedure"?	Yes	Go to appropriate inspection procedure. **Note** • If the malfunction remains even though all inspections have been performed, get assistance from Technical Hotline.
		No	Troubleshooting completed.

AUTOMATIC TRANSMISSION BASIC INSPECTION

XSU501WC3

STEP	INSPECTION		ACTION
1	Connect NGS tester to data link connector-2. Turn ignition switch to ON. Retrieve any diagnostic trouble code. Is "NO CODES RECEIVED/SYSTEM PASSED" displayed?	Yes	**No diagnostic trouble code is displayed:** Go to next step.
		No	**Diagnostic trouble code is displayed:** Go to appropriate diagnostic trouble code test. **If communication error message is displayed on NGS tester, inspect following:** • Open circuit between main relay and PCM terminal B • Open main relay ground circuit. • Main relay stuck open. • Open or poor ground circuit (PCM terminal 3A, 3B or 3C). • Poor connection of vehicle body ground.
2	Turn ignition switch to ON. Does O/D OFF indicator light (illuminate/go out) correspond to O/D OFF switch position (ON/OFF)?	Yes	Go to next step.
		No	Go to symptom troubleshooting No.25 "O/D OFF INDICATOR LIGHT DOES NOT ILLUMINATE WHEN O/D OFF SWITCH IS TURNED ON" or No.26 "O/D OFF INDICATOR LIGHT ILLUMINATES WHEN O/D OFF SWITCH IS NOT TURNED ON".
3	Inspect ATF color and condition. ☞ 05–13 AUTOMATIC TRANSMISSION FLUID (ATF) INSPECTION, ATF Condition Inspection. Are ATF color, odor and level okay?	Yes	Go to next step.
		No	Repair or replace any defective parts according to inspection result. Flush automatic transmission and cooler line as necessary.
4	Perform line pressure test. ☞ 05–13 MECHANICAL SYSTEM TEST, Line Pressure Test. Is line pressure okay?	Yes	Go to next step.
		No	Adjust throttle cable as necessary. ☞ 05–13 THROTTLE CABLE ADJUSTMENT. Repair or replace any defective parts according to inspection result.
5	Perform stall test. ☞ 05–13 MECHANICAL SYSTEM TEST, Stall Test. Is stall speed okay?	Yes	Go to next step.
		No	Repair or replace any defective parts according to inspection result.
6	Turn ignition switch off. Disconnect TCM connector. Inspect continuity between TCM connector terminal AP and ground. Is there continuity?	Yes	Reconnect TCM connector. Go to next step.
		No	Inspect ground condition. Repair or replace ground circuit as necessary.
7	Access TCM. Inspect voltage at following TCM connector terminals: ☞ 05–13 TRANSMISSION CONTROL MODULE INSPECTION. • Throttle position sensor signal (terminal U) • Output speed sensor signal (terminal AF and AE) • Input/turbine speed sensor signal (terminal W and Z) • R position signal (terminal D) • N position signal (terminal F) • D range signal (terminal C) • 2 range signal (terminal B) • 1 range signal (terminal A) Are all terminal voltages okay?	Yes	Go to appropriate symptom troubleshooting and follow procedures.
		No	Inspect following, then go to appropriate symptom troubleshooting and follow procedures: **Throttle position sensor:** • Inspect for open or short circuit between throttle position sensor and TCM terminals U and R. • Inspect throttle position sensor adjustment. **Output speed sensor:** • Inspect for open or short circuit between output speed sensor and TCM terminal AF or AE. • Inspect for damages of sensor rotor and sensor. • Inspect output speed sensor. **Input/turbine speed sensor:** • Inspect open or short circuit between input/turbine speed sensor and TCM terminal W or Z. • Inspect for damage of teeth on outer shell. • Inspect input/turbine speed sensor. • Inspect automatic transmission internal damage. **Transmission range switch signals (R, N, D, 2, and/or 1 range):** • Inspect transmission range switch adjustment. • Inspect shift linkage adjustment (include automatic transmission internal related part). • Inspect for open or short circuit between transmission range switch and TCM terminals.

AUTOMATIC TRANSMISSION SYMPTOM TROUBLESHOOTING

X5U501W04

Diagnosis Index

- Use the chart below to verify the symptoms of the trouble in order to diagnose the appropriate area.

No.	TROUBLESHOOTING ITEM	DESCRIPTION
1	Vehicle does not move in D, 2, 1 ranges, or in R position.	Vehicle does not move when accelerator pedal is depressed.
2	Vehicle moves in N position.	Vehicle creeps in N position. Vehicle creeps if brake pedal is not depressed in N position.
3	Vehicle moves in P position, or parking gear does not disengage when P is disengaged.	Vehicle rolls when on a downward slope and tires do not lock in P position. Tires are locked when P is disengaged, vehicle does not move in D, 2, 1 ranges, and R position when accelerator pedal is depressed, and engine remains in stall condition.
4	Excessive creep	Vehicle accelerates in D, 2, 1 ranges, and R position without depressing accelerator pedal.
5	No creep at all	Vehicle does not move in D, 2, 1 ranges, or R position when idling on flat paved road.
6	Low maximum speed and poor acceleration	Vehicle acceleration is poor at start. Delayed acceleration when accelerator is depressed while driving.
7	No shift	Single shift range only. Sometimes shift correctly.
8	No TCC function	TCC does not operate even though vehicle speed is increased.
9	Abnormal shift	Shifts incorrectly (incorrect shift pattern).
10	Frequent shifting	Downshifting occurs immediately even when accelerator pedal is depressed slightly in D, 2, 1 ranges (O/D OFF switch is off).
11	Shift point is high or low	Shift point is considerably different from automatic shift diagram. Shift is delayed when accelerating. Shift occurs quickly when accelerating and engine speed does not increase.
12	No kickdown	Does not downshift when accelerator pedal is fully depressed within kickdown range.
13	Engine flares up or slips when upshifting or downshifting	When accelerator pedal is depressed for driveway, engine speed increases but vehicle speed increase slowly. When accelerator pedal is depressed while driving, engine speed increases but vehicle speed does not increase.
14	Engine flares up or slips when accelerating vehicle	Engine flares up when accelerator pedal is depressed for upshifting. Engine flares up suddenly when accelerator pedal is depressed for downshifting.
15	Judder upon during TCC operation	Vehicle jolts when TCC is engaged.
16	Excessive N to D or N to R position/range shift shock	Strong shock is felt when shifting from N to D or N to R position/range at idle.
17	Excessive shift shock when upshifting and downshifting	Excessive shift shock is felt when depressing accelerator pedal to accelerate at upshifting. During cruising, excessive shift shock is felt when depressing accelerator pedal at downshifting.
18	Excessive TCC shift shock	Strong shock is felt when torque converter clutch is engaged.
19	Noise at idle when vehicle is stopped in all position/ranges	Transmission is noisy in all positions and ranges when vehicle is idling.
20	Noise at idle when vehicle is stopped in D, 2, 1 ranges, or in R position	Transmission is noisy in driving ranges when vehicle is idling.

No.	TROUBLESHOOTING ITEM	DESCRIPTION
21	No engine braking in 1, 2, or 3 gear	Engine speed drops to idle but vehicle coasts when accelerator pedal is released during cruising at medium to high speeds. Engine speed drops to idle but vehicle coasts when accelerator pedal is released when in 1 range at low vehicle speed.
22	Transmission overheats	Burnt smell is emitted from transmission. Smoke is emitted from transmission.
23	Engine stalls when shifted to D, 2, 1 ranges, and/or in R position	Engine stalls when shifting from N or P position to D, 2, 1 ranges or R position at idle.
24	Engine stalls when driving at slow speeds or stopping.	Engine stalls when brake pedal is depressed while driving at low speeds or stopping.
25	O/D OFF indicator light does not illuminate when O/D OFF switch is turned on	O/D OFF indicator light in dashboard does not illuminate when O/D OFF switch is turned on and ignition switch is at ON.
26	O/D OFF indicator light illuminates when O/D OFF switch is not turned on	O/D OFF indicator light in dashboard illuminates even though O/D OFF switch is turned off and ignition switch is at ON.

Quick Diagnosis Chart

No.	Item	Selector lever misadjusted	Ignition system malfunction	Not within line pressure specification	Idle speed misadjusted	Ignition timing misadjusted	Transmission range switch misadjusted	Throttle position sensor: Signal is not output	Throttle position sensor: Malfunction signal is output	Input/turbine speed sensor: Signal is not output	Input/turbine speed sensor: Malfunction signal is output	O/D OFF switch: Signal is not output	O/D OFF switch: Malfunction signal is output	Output speed sensor: Signal is not input	Output speed sensor: Malfunction signal is output	Poor ground
							Electrical system components									
							ATX outer parts									
1	Vehicle does not move in D, 2, 1 ranges, or in R position	○		○				○	○	○	○					○
2	Vehicle moves in N position	○		○				○	○	○	○					○
3	Vehicle moves in P position, or parking gear does not disengage when P is disengaged	○														
4	Excessive creep			○	○	○										
5	No creep at all	○		○				○	○	○	○					○
6	Low maximum speed and poor acceleration			○		○	○	○	○	○	○	○	○			○
7	No shift			○				○	○	○	○	○	○			○
8	No TCC function			○			○	○	○	○	○	○	○	○	○	○
9	Abnormal shift	○		○			○	○	○	○	○					○
10	Frequent shifting			○				○	○	○	○					○
11	Shift point is high or low				○	○		○	○	○	○					○
12	No kickdown							○	○							○
13	Engine flares up or slips when upshifting or downshifting	○		○				○	○	○	○					○
14	Engine flares up or slips when accelerating vehicle	○		○				○	○	○	○					○
15	Judder during torque converter clutch (TCC) operation			○		○		○	○	○	○					
16	Excessive N to D or N to R position/range shift shock			○	○			○	○	○	○					
17	Excessive shift shock when upshifting and downshifting			○				○	○	○	○					
18	Excessive torque converter clutch (TCC) shift shock			○				○	○	○	○					
19	Noise at idle when vehicle is stopped in all positions/ranges							○	○							
20	Noise at idle when vehicle is stopped in D, 2, 1, ranges, and/or in R position	○					○	○	○							
21	No engine braking in 1, 2, or 3 gear	○		○			○	○	○	○	○	○	○			
22	Transmission overheats			○												
23	Engine stalls when shifted to D, 2, 1 ranges, and/or in R position				○		○									
24	Engine stalls when driving at slow speeds or stopping				○		○									
25	O/D OFF indicator light does not illuminate when O/D OFF switch is turned ON											○	○			
26	O/D OFF indicator light illuminates when O/D OFF switch is not turned ON											○	○			
	Line pressure test															
	Stall test															
	Time lag test															
	Diagnostic trouble code							○		○				○		

Symptom / Cause of trouble / Inspection method / Item

X5U50'WAC

No.	Item (Symptom / Cause of trouble / Inspection method)	Electrical system components: ATX inner parts: Shift solenoid A malfunction	Shift solenoid B malfunction	TCC solenoid valve malfunction	Hydraulic system components: Control valve not operating properly	Brake No.2 accumulator not operating properly	Direct accumulator not operating properly	Forward accumulator not operating properly	Oil cooler not operating properly	Powertrain system: Slipping (Brake, clutch)	Burnt (Brake, clutch)	Torque converter not operating properly	TCC piston burnt
1	Vehicle does not move in D, 2, 1 ranges, or in R position	○	○		○					○	○	○	
2	Vehicle moves in N position	○	○		○						○		
3	Vehicle moves in P position, or parking gear does not disengage when P is disengaged										○		
4	Excessive creep												
5	No creep at all	○	○		○					○	○	○	
6	Low maximum speed and poor acceleration	○	○		○					○	○	○	
7	No shift	○	○		○					○	○		
8	No TCC function			○	○					○		○	
9	Abnormal shift	○	○		○					○	○		
10	Frequent shifting				○					○			
11	Shift point is high or low												
12	No kickdown	○	○		○					○	○		
13	Engine flares up or slips when upshifting or downshifting	○	○		○					○			
14	Engine flares up or slips when accelerating vehicle	○	○		○					○			
15	Judder during torque converter clutch (TCC) operation			○	○							○	○
16	Excessive N to D or N to R position/range shift shock				○			○		○	○		
17	Excessive shift shock when upshifting and downshifting	○	○		○	○	○			○	○		
18	Excessive torque converter clutch (TCC) shift shock			○	○								
19	Noise at idle when vehicle is stopped in all positions/ranges	○	○									○	
20	Noise at idle when vehicle is stopped in D, 2, 1, ranges, and/or in R position											○	
21	No engine braking in 1, 2, or 3 gear				○					○			
22	Transmission overheats			○					○		○		○
23	Engine stalls when shifted to D, 2, 1 ranges, and/or in R position			○	○								○
24	Engine stalls when driving at slow speeds or stopping			○	○								○
25	O/D OFF indicator light does not illuminate when O/D OFF switch is turned ON												
26	O/D OFF indicator light illuminates when O/D OFF switch is not turned ON												
	Item												
	Line pressure test				○					○	○		
	Stall test				○					○	○	○	
	Time lag test							○		○	○		
	Diagnostic trouble code	○	○	○									

X5UEC1WA1

Symptom Troubleshooting

1	VEHICLE DOES NOT MOVE IN D, 2, 1 RANGES, OR IN R POSITION

TROUBLESHOOTING HINTS

If the vehicle does not move in D, 2, 1 ranges or R position, basically, the malfunction is in the automatic transmission. (Vehicle will move even with a malfunction in the PCM.) Since a malfunction in the sensor circuit or output circuit is the cause of the malfunction in the automatic transmission, inspect the sensors, output circuit, and the related harnesses.

① Clutch slippage, worn (D, 2, 1 ranges—Forward clutch, 4GR clutch, one-way clutch No.0, One-way clutch No.2, R position—Reverse brake, 4GR clutch, direct clutch, one-way clutch No.0)
- Line pressure is low
- Malfunction of sensor ground
- Malfunction of shift solenoid A
- Malfunction of shift solenoid B
- Malfunction of body ground
- Malfunction of control valve body

② Malfunction of selector lever
③ Parking mechanism not operating properly.
④ Malfunction of torque converter

Before following the troubleshooting steps, make sure that the on-board diagnosis and basic inspection are conducted.

STEP	INSPECTION		ACTION
1	With vehicle stopped on a flat, road and engine off, does vehicle move when pushed? (in D, 2 range or N, R position and brake released)	Yes	Go to next step.
		No	Inspect parking mechanism.
2	Does vehicle move when selector lever is in between N position and D range?	Yes	Go to next step.
		No	Inspect or adjust the selector lever. ☞ 05–14 SELECTOR LEVER ADJUSTMENT.
3	Turn ignition switch to ON. Inspect voltages between following TCM connector terminals and ground in D, 2 and 1 ranges. ☞ 05–13 TRANSMISSION CONTROL MODULE INSPECTION. **Specification** **TCM terminal AQ: B+** **TCM terminal AN: 0 V** Are voltages okay?	Yes	Go to next step.
		No	Inspect following: • Body ground condition • TCM connector terminals AS and AR voltage **Specifications: B+**
4	Disconnect shift solenoid connector. Turn ignition switch to ON. Inspect voltages between each shift solenoid connector terminal and ground in D, 2 and 1 ranges. ☞ 05–13 TRANSMISSION CONTROL MODULE INSPECTION. **Specification** **Terminal B: B+** **Terminal A: 0 V** Are voltages okay?	Yes	Inspect for bent, damaged, corroded or loose connection of shift solenoid terminal on automatic transmission. Inspect for mechanically stuck shift solenoids. ☞ 05–13 SOLENOID VALVES INSPECTION, Operating Inspection. If shift solenoids are okay, overhaul control valve body and repair or replace any defective parts. If problem remains, replace or overhaul transmission and repair or replace any defective parts.
		No	Inspect for open or short circuit between TCM connector terminal and shift solenoid connector terminal.

Note
- If the malfunction remains even though all inspections have been performed, get assistance from technical hotline/your distributors.

2	VEHICLE MOVES IN N POSITION

TROUBLESHOOTING HINTS
If the vehicle moves in N position, basically, the malfunction is in the automatic transmission. Since a malfunction in the sensor circuit or output circuit is the cause of the malfunction in the automatic transmission, inspect the sensor, output circuit, and the related harnesses.
① Clutch is burned. (Move forward: Forward clutch, one-way clutch No.0, one-way clutch No.2, Move backward: Direct clutch, reverse brake, one-way clutch No.0)
- Line pressure is low
- Malfunction of control valve body

② Selector lever position disparity
Before following the troubleshooting steps, make sure that the on-board diagnosis and basic inspection are conducted.

STEP	INSPECTION		ACTION
1	Does vehicle creep when selector lever is moved slightly in N position?	Yes	Overhaul control valve body and repair or replace any defective parts. If problem remains, replace or overhaul transmission and repair or replace any defective parts.
		No	Inspect and adjust selector lever. ☞ 05–14 SELECTOR LEVER ADJUSTMENT.

Note
- If the malfunction remains even though all inspections have been performed, get assistance from technical hotline/your distributors.

3	VEHICLE MOVES IN P POSITION, OR PARKING GEAR DOES NOT DISENGAGE WHEN P IS DISENGAGED

TROUBLESHOOTING HINTS
① Malfunction of parking mechanism (May have effect on noise or shock from transmission)
② Improper adjustment of selector lever
③ If vehicle moves in N position, perform No.2 "VEHICLE MOVES IN N POSITION".
Before following the troubleshooting steps, make sure that the on-board diagnosis and basic inspection are conducted.

Note
- If the malfunction remains even though all inspections have been performed, get assistance from technical hotline/your distributors.

4	EXCESSIVE CREEP

TROUBLESHOOTING HINTS
① Engine idle speed is high (transmission system is not cause of problem)
② Go to No.8 "FAST IDLE/RUNS ON"
☞ 01–01A ENGINE SYMPTOM TROUBLESHOOTING
Before following the troubleshooting steps, make sure that the on-board diagnosis and basic inspection are conducted.

Note
- If the malfunction remains even though all inspections have been performed, get assistance from technical hotline/your distributors.

5	NO CREEP AT ALL

TROUBLESHOOTING HINTS

Either the transmission is stuck in 3GR or 4GR position, or there is clutch circuit slippage because the direct clutch is stuck.

① Clutch is burned
- Line pressure is low.
- Malfunction of shift solenoid A
- Malfunction of shift solenoid B
- Malfunction of body ground
- Malfunction of control valve body

② Transmission is fixed in 3GR or 4GR (Operation of fail-safe function)
- Short or open circuit in wiring
- Poor connection of connector
- Malfunction of the electronic parts of output and input system

③ Insufficient starting torque
- Malfunction of torque converter

Before following the troubleshooting steps, make sure that the on-board diagnosis and basic inspection are conducted.

STEP	INSPECTION		ACTION
1	Does vehicle creep in any range/position except for P and N positions?	Yes	Go to next step.
		No	Inspect or adjust the selector lever. ☞ 05–14 SELECTOR LEVER ADJUSTMENT.
2	Turn ignition switch to ON. Inspect voltages between following TCM connector terminals and ground in D range. ☞ 05–13 TRANSMISSION CONTROL MODULE INSPECTION. **Specification** **TCM terminal AQ: B+** **TCM terminal AN: 0 V** Are voltages okay?	Yes	Go to next step.
		No	Inspect following: • Body ground condition • TCM terminals AS and AR voltages: **Specifications: B+**
3	Disconnect shift solenoid connector. Turn ignition switch to ON. Inspect voltages between each shift solenoid connector terminal and ground in D range: **Specification** **Terminal B: B+** **Terminal A: 0 V** Are voltages okay?	Yes	Inspect for bent, damaged, corroded or loose connection of shift solenoid terminal. Inspect for mechanically stuck shift solenoids. ☞ 05–13 SOLENOID VALVE INSPECTION, Operating Inspection. If shift solenoids are okay, go to next step.
		No	Inspect for open or short circuit between TCM connector terminal and shift solenoid connector terminal.
4	Overhaul control valve body and repair or replace any defective parts. Does problem eliminate?	Yes	AT is now normal.
		No	Replace torque converter. If problem remains, replace or overhaul transmission and repair or replace any defective parts.

Note
- If the malfunction remains even though all inspections have been performed, get assistance from technical hotline/your distributors.

6	LOW MAXIMUM SPEED AND POOR ACCELERATION		

TROUBLESHOOTING HINTS

If the clutch is stuck or does not stay in 3GR or 4GR, the malfunction is in the engine circuit.

① Clutch slippage, burned
- Line pressure is low
- Malfunction of throttle position sensor
- Malfunction of output speed sensor
- Malfunction of input/turbine speed sensor
- Malfunction of sensor ground
- Malfunction of shift solenoid A and/or B
- Malfunction of body ground
- Malfunction of control valve body

② Transmission is fixed in 3GR or 4GR (Operation of fail-safe function)
- Short or open circuit in wiring
- Poor connection of connector
- Malfunction of the electronic parts of output and input system

③ Insufficient starting torque (Suspected when in gear condition, shift control and engine circuit are normal)
- Malfunction of torque converter (Poor operation, sticking)

④ Engagement of TCC operation range (Operation of fail-safe function)

Before following the troubleshooting steps, make sure that the on-board diagnosis and basic inspection are conducted.

STEP	INSPECTION		ACTION
1	Go to symptom troubleshooting No.11 "LACK/LOSS OF POWER" ☞ 01–01A ENGINE SYMPTOM TROUBLESHOOTING Does engine control system okay?	Yes	Go to next step.
		No	Repair or replace any defective parts according to inspection results.
2	Disconnect shift solenoid connector Does vehicle operate as follows? **D range—4GR (fixed)** **2 range—3GR (fixed)** **1 range—1GR (fixed)** **R position—Reverse**	Yes	Go to next step.
		No	Overhaul control valve body and repair or replace any defective parts. If problem remains, replace or overhaul transmission and repair or replace any defective parts.
3	Connect shift solenoid connector. Drive vehicle in D, 2, and 1 ranges (O/D OFF switch is off). Does vehicle start from stop in first gear?	Yes	Go to next step.
		No	Inspect voltage at TCM connector terminals AQ and AN in D, 2, and 1 ranges. ☞ 05–13 TRANSMISSION CONTROL MODULE INSPECTION. **Specification** **TCM terminal AQ: B+** **TCM terminal AN: 0 V** If not, inspect body ground condition and TCM terminal AS and AR voltage (B+). If okay, inspect for bent, damage, corrosion or loose connection of shift solenoids terminals. Inspect also continuity between following wiring harness: • Shift solenoid ground circuit • TCM terminal AQ—Shift solenoid terminal B • TCM terminal AN—Shift solenoid terminal A

STEP	INSPECTION		ACTION
4	Connect NGS tester to data link connector-2. Access TP V and VS PIDs. Drive vehicle. Inspect following TCM connector terminal voltages at each shift point monitored by TP V and VS PIDs. ☞ 05–13 ROAD TEST, Shift Diagram. 1GR • TCM terminal AQ: B+ • TCM terminal AN: 0 V 2GR • TCM terminal AQ: B+ • TCM terminal AN: B+ 3GR • TCM terminal AQ: 0 V • TCM terminal AN: B+ 4GR • TCM terminal AQ: 0 V • TCM terminal AN: 0 V Are terminal voltages okay?	Yes	Replace torque converter. If problem remains, replace or overhaul automatic transmission and repair or replace any defective parts.
		No	**If no shift up from 1GR in D range:** Inspect output speed sensor and related wiring harness. **If shift up from 1GR to 4GR in D range:** Inspect shift solenoid B and related wiring harnesses. **For other results:** Inspect following TCM connector terminal voltages while driving in suspect condition: • Throttle position sensor signal (TCM terminal U) • Input/turbine speed sensor (TCM terminal W and Z) • Output speed sensor (TCM terminal AE and AF) If okay, inspect for shift solenoids

Note

- If the malfunction remains even though all inspections have been performed, get assistance from technical hotline/your distributors.

7	NO SHIFT

TROUBLESHOOTING HINTS

When the gear position is fixed in 3GR (in 2 range) or 4GR (in D range) due to the fail-safe operation, the malfunction is in the automatic transmission.

Perform malfunction diagnosis according to No.6 "LOW MAXIMUM SPEED AND POOR ACCELERATION".

① Clutch is burned.
- Line pressure is low
- Malfunction of output speed sensor

Note

- Fix 1GR in D and 2 ranges if there is malfunction in output speed sensor

- Malfunction of input/turbine speed sensor
- Malfunction of sensor ground (TCM AP—ground)
- Malfunction of shift solenoid A
- Malfunction of shift solenoid B
- Malfunction of body ground
- Malfunction of control valve body

② 3GR (in 2 range) or 4GR (in D range) is fixed (operation in fail-safe function).
- Short or open circuit in wiring
- Poor connection of connector
- Disconnected shift solenoid connector
- Poor ground of shift solenoid

Before following the troubleshooting steps, make sure that the on-board diagnosis and basic inspection are conducted.

Fail-safe function

Range	D range				2 range	1 range
Required gear position	**1GR**	**2GR**	**3GR**	**4GR**	**2GR**	**1GR**
Shift solenoid A malfunction	3GR	3GR	3GR	4GR	3GR	1GR
Shift solenoid B malfunction	1GR	4GR	4GR	4GR	3GR	1GR
Both shift solenoids A and B malfunction	4GR	4GR	4GR	4GR	3GR	1GR
Output speed sensor malfunction	1GR	1GR	1GR	1GR	1GR	2GR

Note

- If the malfunction remains even though all inspections have been performed, get assistance from technical hotline/your distributors.

8	NO TCC FUNCTION

TROUBLESHOOTING HINTS

Basically, the TCC does not operate when the fail-safe is operating. Verify the diagnostic trouble code at first. If the TCC operates when driving at high speeds only, the malfunction (improper adjustment) is in the O/D OFF switch circuit or transmission range switch circuit.

Caution

- **If the torque converter clutch or piston is stuck, inspect them. In addition, Inspect the oil cooler for foreign particles which may have mixed in with the ATF.**

① TCC piston slippage, burned
- Line pressure is low
- Malfunction of throttle position sensor
- Malfunction of engine coolant temperature sensor
- Malfunction of output speed sensor
- Malfunction of input/turbine speed sensor
- Malfunction of sensor ground

② Malfunction of transmission range switch
- Short or open circuit in wiring
- Poor connection of connector
- Malfunction of sensor
- Selector lever adjustment is incorrect
- Transmission range switch adjustment is incorrect

③ Malfunction of TCC control solenoid valve
- Short or open circuit in wiring
- Poor connection of connector
- Solenoid valve is stuck

④ Malfunction of O/D OFF switch
⑤ Malfunction of torque converter
⑥ Malfunction of control valve body

Before following the troubleshooting steps, make sure that the on-board diagnosis and basic inspection are conducted.

STEP	INSPECTION		ACTION
1	Drive vehicle in D range and inspect following: • 1–2 shift up and down • 2–3 shift up and down • 3–4 shift up and down Are all shifts up and shifts down possible?	Yes	Go to next step.
		No	**No shift at all** Go to symptom troubleshooting No.7 "NO SHIFT". **No shift from 1GR in D rage** Inspect output speed sensor. **3GR and 4GR are only available in D range.** Inspect shift solenoid A and related harness. **4GR is only available in D range.** Inspect both shift solenoid A and B. Inspect shift solenoid related wiring harness including shift solenoid ground. **Abnormal shift** Go to symptom troubleshooting No.9 "ABNORMAL SHIFT".
2	Connect NGS tester to data link connector-2. Access VS PID and TP V PID. Connect voltmeter to TCM connector terminal AO. Inspect if TCM connector terminal AO voltage is B+ in torque converter clutch operating condition monitored by VS and TP V PIDs. ☞ 05–13 ROAD TEST, Shift Diagram. Is voltage okay?	Yes	Inspect for open or short circuit between TCM connector terminal AO and shift solenoid connector terminal C. Repair or replace as necessary. Inspect for torque converter clutch solenoid valve stuck. ☞ 05–13 SOLENOID VALVES INSPECTION, Operating Inspection. then, go to next step.
		No	Inspect for bent, damaged, corroded or loose connection of TCM connector terminals. Inspect following TCM connector terminal voltages while driving in suspect condition. ☞ 05–13 TRANSMISSION CONTROL MODULE INSPECTION • D range signal (TCM terminal C) • Input/turbine speed sensor signal (TCM terminals W and Z) • Ground (TCM terminal AP) • Output speed sensor signal (TCM terminal AE and AF) • Throttle position sensor signal (TCM terminal U) Repair or replace any defective parts.

STEP	INSPECTION		ACTION
3	Overhaul control valve body and repair or replace any defective parts. Is problem eliminated?	Yes	AT is now normal.
		No	Replace torque converter. If problem remains, replace or overhaul transmission and repair or replace any defective parts

Note

- If the malfunction remains even though all inspections have been performed, get assistance from technical hotline/your distributors.

9	ABNORMAL SHIFT

TROUBLESHOOTING HINTS

There is a malfunction in the signal circuit which controls shifting (throttle position sensor, input/turbine speed sensor, and output speed sensor), the control valve is stuck, or the clutch circuit is stuck.

① Clutch slippage, burned

- Line pressure is low
- Malfunction or misadjustment of throttle position sensor
- Malfunction of output speed sensor
- Malfunction of input/turbine speed sensor
- Malfunction of sensor ground
- Malfunction of shift solenoid A
- Malfunction of shift solenoid B
- Malfunction of torque converter clutch solenoid valve
- Malfunction of body ground
- Misadjustment of throttle cable
- Malfunction of control valve body

Before following the troubleshooting steps, make sure that the on-board diagnosis and basic inspection are conducted.

STEP	INSPECTION		ACTION
1	Inspect for continuity between TCM connector terminal AP and ground. Is there continuity?	Yes	Go to next step.
		No	Repair or replace ground circuit.
2	Make sure abnormal shift driving condition Inspect for any abnormal signal change at the following TCM terminals when abnormal shift is occurred: • D, 2, or 1 range signal (TCM C, B, or A) • Throttle position sensor signal (TCM terminal U) • Output speed sensor signal (TCM terminal AE and AF) • Input/turbine speed sensor signal (TCM terminal W and Z) Are all signals okay?	Yes	Go to next step.
		No	Inspect for intermittent open or short of the related wiring harness and sensor.
3	Connect NGS tester to data link connector-2. Access TP V and VS PIDs. Drive vehicle. Inspect following TCM connector terminal voltage at each shift point monitored by TP V and VS PIDs; ☞ 05–13 ROAD TEST, Shift Diagram. 1GR • TCM terminal AQ: B+ • TCM terminal AN: 0 V 2GR • TCM terminal AQ: B+ • TCM terminal AN: B+ 3GR • TCM terminal AQ: 0 V • TCM terminal AN: B+ 4GR • TCM terminal AQ: 0 V • TCM terminal AN: 0 V Are terminal voltages okay?	Yes	Inspect for continuity between TCM connector terminal and shift solenoid connector terminal. Inspect also for shift solenoid stuck. ☞ 05–13 SOLENOID VALVES INSPECTION, Operating Inspection. If okay, overhaul control valve body and repair or replace any defective parts. If problem remains, replace or overhaul transmission and repair or replace any defective parts.
		No	Inspect for bent, damaged, corroded or poor contact of TCM terminal.

Note

- If the malfunction remains even though all inspections have been performed, get assistance from technical hotline/your distributors.

10	FREQUENT SHIFTING

TROUBLESHOOTING HINTS

The circuit which is the cause is basically the same as for No.9 "ABNORMAL SHIFT". However, a malfunction of the input signal to the throttle position sensor, input/turbine speed sensor, output speed sensor (including the sensor ground, sensor harness and connector), or clutch slippage (clutch stuck, low pressure in line) may also be the cause.

Before following the troubleshooting steps, make sure that the on-board diagnosis and basic inspection are conducted.

Note

- If the malfunction remains even though all inspections have been performed, get assistance from technical hotline/your distributors.

11	SHIFT POINT IS HIGH OR LOW

TROUBLESHOOTING HINTS

- If the transmission does not shift normally, there is a malfunction of the input signal to the throttle position sensor, input/turbine speed sensor, or output speed sensor.
- If the engine speed is high or low regardless that shifting is normal, inspect the tachometer.
- Verify that the output signal of the throttle position sensor changes linearly.

Before following the troubleshooting steps, make sure that the on-board diagnosis and basic inspection are conducted.

Note

- If the malfunction remains even though all inspections have been performed, get assistance from technical hotline/your distributors.

12	NO KICKDOWN

TROUBLESHOOTING HINTS

If the transmission does not downshift though shifting is normal, the malfunction is in the throttle position sensor circuit(including the sensor ground, sensor harness and connector).

Before following the troubleshooting steps, make sure that the on-board diagnosis and basic inspection are conducted.

Note

- If the malfunction remains even though all inspections have been performed, get assistance from technical hotline/your distributors.

13	ENGINE FLARES UP OR SLIPS WHEN UPSHIFTING OR DOWNSHIFTING

TROUBLESHOOTING HINTS

There is clutch slippage because the clutch is stuck or the line pressure is low.

① Clutch stuck, slippage (Forward clutch, direct clutch, 4GR brake, brake No.2, one-way clutch No.0, one-way clutch No.1, one-way clutch No.2)
- Line pressure is low
- Malfunction or misadjustment of throttle position sensor
- Malfunction of output speed sensor
- Malfunction of input/turbine speed sensor
- Malfunction of sensor ground
- Malfunction of shift solenoid A
- Malfunction of shift solenoid B
- Malfunction of TCC solenoid valve
- Malfunction of body ground
- Misadjustment of throttle cable
- Malfunction of control valve body

② Poor operation of mechanical pressure
- Selector lever position disparity
- Transmission range switch position disparity

Before following the troubleshooting steps, make sure that the on-board diagnosis and basic inspection are conducted.

STEP	INSPECTION		ACTION
1	Is line pressure okay? ☞ 05–13 MECHANICAL SYSTEM TEST, Line Pressure Test.	Yes	Go to next step.
		No	Repair or replace any defective parts according to inspection results.
2	Is shift point okay? ☞ 05–13 ROAD TEST, Shift point table	Yes	Go to next step.
		No	Go to No.9 "ABNORMAL SHIFT".
3	Inspect whether shift solenoids A and B are mechanically stuck. ☞ 05–13 SOLENOID VALVES INSPECTION, Operating Inspection. Are both shift solenoids okay?	Yes	Inspect for bent, damaged, corroded or loose contact of TCM connector terminal and shift solenoid connector terminals. Inspect also shift solenoid ground condition. If all items are okay, overhaul control valve body and repair or replace any defective parts. If problem remains, replace or overhaul transmission and repair or replace any defective parts.
		No	Replace shift solenoid. ☞ 05–13 SOLENOID VALVES REMOVAL/INSTALLATION

Note
- If the malfunction remains even though all inspections have been performed, get assistance from technical hotline/your distributors.

14	ENGINE FLARES UP OR SLIPS WHEN ACCELERATING VEHICLE

TROUBLESHOOTING HINTS

The malfunction is basically the same as for No.13 "ENGINE FLARES UP OR SLIPS WHEN UPSHIFTING OR DOWNSHIFTING".

If condition for No.13 worsens, the malfunction will develop into No.14.

Before following the troubleshooting steps, make sure that the on-board diagnosis and basic inspection are conducted.

Note
- If the malfunction remains even though all inspections have been performed, get assistance from technical hotline/your distributors.

15	JUDDER UPON DURING TCC OPERATION

TROUBLESHOOTING HINTS
Poor torque converter clutch engagement due to either slippage because the TCC piston is stuck or the line pressure is low.

Note
- If the TCC or piston are stuck, inspect them. In addition, inspect the oil cooler for foreign particles which may have mixed in with the ATF.

① TCC piston slippage, burned
- Line pressure is low
- Malfunction or misadjustment of throttle position sensor
- Malfunction of output speed sensor
- Malfunction of input/turbine speed sensor
- Malfunction of sensor ground
- Malfunction of TCC solenoid valve
- Malfunction of control valve body

② Malfunction of torque converter

Before following the troubleshooting steps, make sure that the on-board diagnosis and basic inspection are conducted.

STEP	INSPECTION		ACTION
1	Inspect for abnormal signal change at following TCM connector terminal when judder occurrs: • Throttle position sensor signal (TCM terminal U) • Output speed sensor signal (TCM terminals AE and AF) • Input/turbine speed sensor signal (TCM terminal W and Z) Are all signals okay?	Yes	Go to next step.
		No	Inspect for intermittent open or short of related wiring harness and sensor.
2	Connect NGS tester to data link connector-2. Access VS and TP V PIDs. Inspect TCM connector terminal AO voltage in TCC operating condition monitored by VS and TP V PIDs. ☞ 05–13 TRANSMISSION CONTROL MODULE INSPECTION **Specification: B+ in TCC condition** Does voltage change from 0 to B+ with correct TCC timing?	Yes	Inspect for continuity between TCM connector terminal AO and TCC solenoid valve terminal C. Inspect for TCC solenoid valve stuck. ☞ 05–13 SOLENOID VALVES INSPECTION, Operating Inspection. If okay, go to next step.
		No	Inspect for bent, damaged, corroded and poor contact of TCM connector terminal. Inspect for short to ground between TCC solenoid valve connector terminal C and TCM connector terminal AO.
3	Overhaul control valve body and repair or replace any defective parts. Is problem eliminated?	Yes	AT is now normal.
		No	Replace torque converter.

Note
- If the malfunction remains even though all inspections have been performed, get assistance from technical hotline/your distributors.

16	EXCESSIVE N TO D OR N TO R POSITION/RANGE SHIFT SHOCK

TROUBLESHOOTING HINTS

Shift shock may worsen when the fail-safe is operating. If no diagnostic trouble code is output, the shift shock may worsen due to poor operation of the control valve body or sticking of the clutch.

① Clutch is burned (N→D: Forward clutch, N→R: Reverse brake or direct clutch)
- Line pressure is low
- Malfunction of throttle position sensor
- Malfunction of sensor ground
- Misadjustment of throttle cable
- Malfunction of control valve body

② Poor hydraulic operation (Malfunction in range change)

③ Idle speed is high

④ Poor tightening torque of engine mount or exhaust mount

Before following the troubleshooting steps, make sure that the on-board diagnosis and basic inspection are conducted.

STEP	INSPECTION		ACTION
1	Does shift shock occur only when engine is cold?	Yes	Inspect following TCM connector terminal voltage: ☞ 05–13 TRANSMISSION CONTROL MODULE INSPECTION • Throttle position sensor signal (TCM terminal U) • Ground (TCM terminal AP)
		No	Go to next step.
2	Is line pressure okay? ☞ 05–13 MECHANICAL SYSTEM TEST, Line Pressure Test.	Yes	Go to next step.
		No	Repair or replace any defective parts according to inspection results.
3	Is stall speed okay? ☞ 05–13 MECHANICAL SYSTEM TEST, Stall Test	Yes	Go to next step.
		No	Repair or replace any defective parts according to inspection results.
4	Turn ignition switch to ON Inspect TCM connector terminal AP voltage: ☞ 05–13 TRANSMISSION CONTROL MODULE INSPECTION Is voltage okay?	Yes	Inspect ground condition. Overhaul control valve body and repair or replace any defective parts. If problem remains, replace or overhaul transmission and repair or replace any defective parts.
		No	Adjust throttle position sensor if necessary. Replace throttle position sensor if necessary.

Note
- If the malfunction remains even though all inspections have been performed, get assistance from technical hotline/your distributors.

17	EXCESSIVE SHIFT SHOCK WHEN UPSHIFTING AND DOWNSHIFTING

TROUBLESHOOTING HINTS

Shift shock may worsen when the fail-safe is operating. The shift shock has worsened if the throttle position sensor, input/turbine speed sensor, or output speed sensor signal malfunctions.

① Clutch slippage, burned
- Line pressure is low or high
- Malfunction of throttle position sensor
- Malfunction of output speed sensor
- Malfunction of input/turbine speed sensor
- Malfunction of shift solenoid A
- Malfunction of shift solenoid B
- Malfunction of TCC solenoid valve
- Misadjustment of throttle cable
- Malfunction of body ground and sensor ground
- Malfunction of control valve body

② Poor hydraulic operation (Malfunction in range change)

Before following the troubleshooting steps, make sure that the on-board diagnosis and basic inspection are conducted.

STEP	INSPECTION		ACTION
1	Is line pressure okay? ☞ 05–13 MECHANICAL SYSTEM TEST, Line Pressure Test.	Yes	Go to next step.
		No	Repair or replace any defective parts according to inspection results.
2	Is stall speed okay? ☞ 05–13 MECHANICAL SYSTEM TEST, Stall Test	Yes	Go to next step.
		No	Repair or replace any defective parts according to inspection results.
3	Inspect for abnormal signal change at following TCM connector terminal while upshifting or downshifting: • Throttle position sensor signal (TCM terminal U) • Output speed sensor (TCM terminal AE and AF) • Input/turbine speed sensor signal (TCM terminal W and Z) Are all signals okay?	Yes	Go to next step.
		No	Inspect for intermittent open or short of related wiring harness and sensor.
4	Inspect whether shift solenoids are mechanically stuck. ☞ 05–13 SOLENOID VALVES INSPECTION, Operating Inspection. Are shift solenoids okay?	Yes	Inspect for continuity between appropriate shift solenoid connector terminal and appropriate TCM connector terminal. If okay, overhaul control valve body and repair or replace any defective parts If problem remains, replace or overhaul transmission and repair or replace any defective parts.
		No	Replace shift solenoid

Note
- If the malfunction remains even though all inspections have been performed, get assistance from technical hotline/your distributors.

18	EXCESSIVE TCC SHIFT SHOCK

TROUBLESHOOTING HINTS

① The troubleshooting flow is the same as for No.15 "JUDDER UPON TCC OPERATION".

Before following the troubleshooting steps, make sure that the on-board diagnosis and basic inspection are conducted.

Note
- If the malfunction remains even though all inspections have been performed, get assistance from technical hotline/your distributors.

19	NOISE AT IDLE WHEN VEHICLE IS STOPPED IN ALL POSITIONS/RANGES

TROUBLESHOOTING HINTS

The malfunction is in the oil pump which causes a high-pitched noise to be emitted from the transmission at idle.

Note

- If a noise is emitted during shifting only, the malfunction is in shift solenoid A, B, or TCC solenoid valve. If a noise is emitted during shifting at certain gears only or during deceleration only, it is gear noise.

Before following the troubleshooting steps, make sure that the on-board diagnosis and basic inspection are conducted.

STEP	INSPECTION		ACTION
1	Inspect engine condition. Is there anything wrong with the engine?	Yes	Go to appropriate symptom troubleshooting. ☞ 01–01A ENGINE SYMPTOM TROUBLESHOOTING.
		No	Inspect engine and transmission mounts installation condition. Inspect also for AT cooler pipe vibration. If okay, overhaul control valve body and repair or replace any defective parts. If problem remains, replace or overhaul transmission and repair or replace any defective parts.

Note

- If the malfunction remains even though all inspections have been performed, get assistance from technical hotline/your distributors.

20	NOISE AT IDLE WHEN VEHICLE IS STOPPED IN D, 2, 1 RANGE OR IN R POSITION

TROUBLESHOOTING HINTS

① Although the malfunction is basically the same as No.19 "NOISE AT IDLE WHEN VEHICLE STOPPED IN ALL POSITIONS/RANGES", other causes may be selector lever position disparity or transmission range switch position disparity.

Before following the troubleshooting steps, make sure that the on-board diagnosis and basic inspection are conducted.

Note

- If the malfunction remains even though all inspections have been performed, get assistance from technical hotline/your distributors.

21	NO ENGINE BRAKING IN 1, 2, or 3 GEAR

TROUBLESHOOTING HINTS

① Clutch slippage, burned (brake No.1, reverse brake)
- Line pressure is low
- Malfunction of output speed sensor
- Malfunction of input/turbine speed sensor
- Malfunction of sensor ground
- Malfunction of control valve body

② O/D OFF switch is on is not judged by TCM (short, or open circuit, poor operation)
- Malfunction of O/D OFF switch signal

Before following the troubleshooting steps, make sure that the on-board diagnosis and basic inspection are conducted.

STEP	INSPECTION		ACTION
1	Connect NGS tester to data link connector-2. Turn ignition switch to ON. Select TR SW PID. Is TR SW PID reading okay when selecting range? ☞ 01–40 POWERTRAIN CONTROL MODULE (PCM) INSPECTION.	Yes	Go to next step.
		No	Inspect for transmission range switch adjustment. ☞ 05–13 TRANSMISSION RANGE SWITCH ADJUSTMENT Adjust transmission range switch as necessary. Inspect transmission range switch. Repair or replace any defective parts.

STEP	INSPECTION		ACTION
2	Do following symptoms concurrently occur? • Engine flares up or slips during acceleration. • Engine flares up or slips when shifting.	Yes	Go to symptom troubleshooting No.13 "ENGINE FLARES UP OR SLIPS WHEN UPSHIFTING OR DOWNSHIFTING" or No.14 "ENGINE FLARES UP OR SLIPS WHEN ACCELERATING VEHICLE".
		No	Go to next step.
3	Inspect voltages at following TCM connector terminals: ☞ 05–13 TRANSMISSION CONTROL MODULE INSPECTION • TCC solenoid valve signal (TCM terminal AO) • Input/turbine speed sensor signal (TCM terminal W and Z) • Output speed sensor signal (TCM terminals AE and AF) Are voltages okay?	Yes	Overhaul control valve body and repair or replace any defective parts. If problem remains, replace or overhaul transmission and repair or replace any defective parts.
		No	Inspect for intermittent open or short circuit on related wiring harness and/or sensor.

Note

- If the malfunction remains even though all inspections have been performed, get assistance from technical hotline/your distributors.

22	TRANSMISSION OVERHEATS

TROUBLESHOOTING HINTS

The malfunction is restricted to hindrance of coolant at the oil cooler.

① Line pressure is low
- ATF level is low
- Malfunction of throttle position sensor
- Misadjustment of throttle cable

② Oil cooler malfunction (Foreign material mixed in with ATF)

③ Excessive amount of ATF

Before following the troubleshooting steps, make sure that the on-board diagnosis and basic inspection are conducted.

STEP	INSPECTION		ACTION
1	Is line pressure okay? ☞ 05–13 MECHANICAL SYSTEM TEST, Line Pressure Test.	Yes	Go to next step.
		No	Repair or replace any defective parts according to inspection results.
2	Perform stall test. ☞ 05–13 MECHANICAL SYSTEM TEST, Stall Test Is stall speed okay?	Yes	Go to next step.
		No	Repair or replace any defective parts according to inspection results.
3	Inspect for bent, damage, corrosion or kinks of oil cooler pipes. Are oil cooler pipes okay?	Yes	Overhaul control valve body and repair or replace any defective parts. If problem remains, replace or overhaul transmission and repair or replace any defective parts.
		No	Replace any defective parts.

Note

- If the malfunction remains even though all inspections have been performed, get assistance from technical hotline/your distributors.

23	ENGINE STALLS WHEN SHIFTED TO D, 2, 1 RANGES, AND/OR IN R POSITION		
TROUBLESHOOTING HINTS ① The malfunction is on engine control side (i.e. IAC control). Otherwise, the malfunction is TCC circuit (engine always stalls). **Before following the troubleshooting steps, make sure that the on-board diagnosis and basic inspection are conducted.**			
STEP	**INSPECTION**		**ACTION**
1	Go to symptom troubleshooting No.4 "ENGINE STALLS" ☞ 01–01A ENGINE SYMPTOM TROUBLESHOOTING. Is engine control system okay?	Yes	Go to next step.
		No	Repair or replace any defective parts according to inspection results.
2	Inspect TCM connector terminal AO voltage. ☞ TRANSMISSION CONTROL MODULE INSPECTION Is terminal voltage okay?	Yes	Inspect TCC solenoid valve mechanical stuck. ☞ SOLENOID VALVE INSPECTION, Operating Inspection. If okay, go to next step.
		No	Inspect for intermittent short to power circuit between TCC connector terminal AO and TCC solenoid valve connector terminal.
3	Inspect for bent, damage or kinks of oil cooler line pipes. If okay, overhaul control valve body and repair or replace any defective parts Does problem eliminate?	Yes	AT is now normal.
		No	Replace torque converter. If problem remains, replace or overhaul transmission and repair or replace any defective parts.

Note

- If the malfunction remains even though all inspections have been performed, get assistance from technical hotline/your distributors.

24	ENGINE STALLS WHEN DRIVING AT SLOW SPEEDS OR STOPPING		
TROUBLESHOOTING HINTS The malfunction is on the engine control side (fuel injection control, IAC control). **Before following the troubleshooting steps, make sure that the on-board diagnosis and basic inspection are conducted.**			
STEP	**INSPECTION**		**ACTION**
1	Go to symptom troubleshooting No.9 "LOW IDLES/STALLS DURING DECELERATION". ☞ 01–01A ENGINE SYMPTOM TROUBLESHOOTING Is engine control system okay?	Yes	Go to symptom troubleshooting No.23 "ENGINE STALLS WHEN SHIFTED TO D, 2, 1 RANGE, AND/OR IN R POSITION".
		No	Repair or replace any defective parts according to inspection results.

Note

- If the malfunction remains even though all inspections have been performed, get assistance from technical hotline/your distributors.

25	O/D OFF INDICATOR LIGHT DOES NOT ILLUMINATE WHEN O/D OFF SWITCH IS TURNED ON		
TROUBLESHOOTING HINTS O/D OFF switch or related wiring harness malfunction			
STEP	**INSPECTION**		**ACTION**
1	Are other indicator lights illuminated with ignition switch at ON?	Yes	Inspect meter fuse.
		No	Go to next step.
2	Inspect O/D OFF switch. ☞ 05–13 O/D OFF SWITCH INSPECTION Is O/D OFF switch okay?	Yes	Go to next step.
		No	Replace O/D OFF switch. ☞ 05–13 O/D OFF SWITCH REMOVAL/INSTALLATION
3	Inspect TCM connector terminal L voltage. ☞ 05–13 TRANSMISSION CONTROL MODULE INSPECTION Is terminal voltage okay?	Yes	Go to next step.
		No	Inspect continuity between O/D OFF switch and TCM terminal K.
4	Remove O/D OFF indicator light. Is O/D OFF indicator light bulb burned out?	Yes	Replace O/D OFF indicator light.
		No	Inspect for open circuit or disconnected connector in following harness: • Ignition switch and O/D OFF indicator light • O/D OFF indicator light and TCM terminal L including instrument cluster circuit board

Note
- If the malfunction remains even though all inspections have been performed, get assistance from technical hotline/your distributors.

26	O/D OFF INDICATOR LIGHT ILLUMINATES WHEN O/D OFF SWITCH IS NOT TURNED ON		
TROUBLESHOOTING HINTS O/D OFF switch or related wiring harness malfunction			
STEP	**INSPECTION**		**ACTION**
1	Inspect O/D OFF switch. ☞ 05–13 O/D OFF SWITCH INSPECTION. Is O/D OFF switch okay?	Yes	Go to next step.
		No	Replace O/D OFF switch. ☞ 05–13 O/D OFF SWITCH REMOVAL/INSTALLATION.
2	Inspect TCM connector terminal L voltage. ☞ 05–13 TRANSMISSION CONTROL MODULE INSPECTION. Is terminal voltage okay?	Yes	Inspect for short to ground circuit between O/D OFF switch terminal and TCM terminal K.
		No	Inspect for short to ground circuit between O/D OFF indicator light on instrument cluster and TCM connector terminal L including instrument cluster circuit board.

Note
- If the malfunction remains even though all inspections have been performed, get assistance from technical hotline/your distributors.

05–10 CLUTCH

GENERAL PROCEDURES (CLUTCH)

X5U510W01

Precaution

Clutch pipe

- If any clutch pipe has been disconnected anytime during the procedure, add brake fluid, bleed the air, and inspect for leakage after the procedure has been completed.
- If removing the clutch pipe, remove it by using the **SST** (49 0259 770B). If installing the clutch pipe, change the clutch pipe tightening torque to allow for use of a torque wrench-**SST** (49 0259 770B) combination, and then tighten the clutch pipe by using the **SST** (49 0259 770B). (Refer to 00–00 FUNDAMENTAL PROCEDURES, Torque Formulas.)

CLUTCH FLUID INSPECTION

X5U510W02

Note

- The fluid reservoir must be maintained between the MIN/MAX level during replacement.

CLUTCH FLUID REPLACEMENT

X5U510W03

Caution

- **Clutch fluid will damage painted surfaces. If clutch fluid does get on a painted surface, wipe it off immediately.**

Note

- Do not mix different brands of fluid.
- Do not reuse the clutch fluid that was drained.

1. Drain the fluid from the reservoir by using a suction pump. (Refer to 04–10 PRECAUTION (BRAKES).)
2. Remove the bleeder cap from the clutch release cylinder and attach a vinyl hose to the bleeder screw.
3. Insert the other end of the vinyl hose into a clear container.
4. Loosen the bleeder screw by using the **SST**.

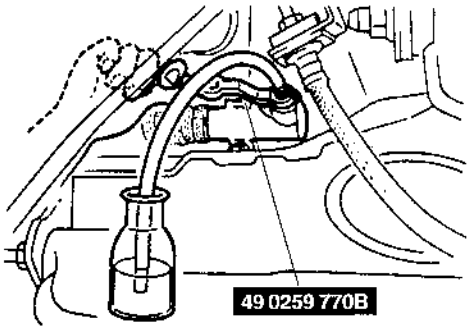

X5U510WA1

5. With another person slowly pumping the clutch pedal, drain the fluid from the clutch system.
6. Repeat step 5 until all the fluid is drained.
7. Change the bleeder screw tightening torque to allow for a torque wrench-**SST** combination. (Refer to 00–00 FUNDAMENTAL PROCEDURES, Torque Formulas.)
8. Tighten the bleeder screw by using the **SST**.

   Tightening torque
   5.9—8.8 N·m {60—90 kgf·cm, 53—78 in·lbf}

9. Fill the reservoir to MAX with new fluid of the specified type.
10. Bleed the air from the clutch. (Refer to 05–10 CLUTCH FLUID AIR BLEEDING.)
11. Verify correct clutch operation.
12. Verify that there is no fluid leakage.

CLUTCH FLUID AIR BLEEDING

X5U510W04

Caution

- **Clutch fluid will damage painted surfaces. If clutch fluid does get on a painted surface, wipe it off immediately.**

Note

- Do not mix different brands of fluid.
- Do not reuse the clutch fluid that was drained.

1. Remove the bleeder cap from the clutch release cylinder and attach a vinyl hose to the bleeder plug.
2. Place the other end of the vinyl hose in a clear container.
3. Slowly pump the clutch pedal several times.
4. With the clutch pedal depressed, loosen the bleeder screw by using the **SST** to let the fluid escape. Close the bleeder screw by using the **SST**.
5. Repeat Steps 3 and 4 until only clean fluid is seen.
6. Tighten the bleeder screw.

   Tightening torque
   5.9—8.8 N·m {60—90 kgf·cm, 53—78 in·lbf}

7. Add fluid to the MAX mark.

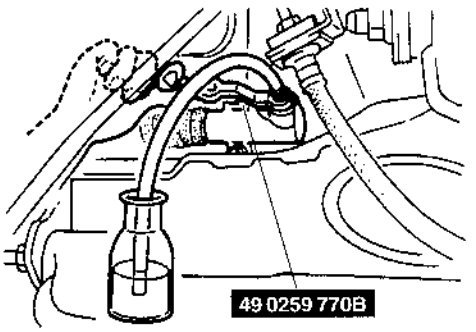

X5U510WA2

CLUTCH PEDAL INSPECTION

X5U510W05

Clutch Pedal Height Inspection

1. Measure the distance from the upper surface of the pedal pad to the cabin carpet.

   Pedal height
   175—180 mm {6.89—7.09 in} (With carpet)

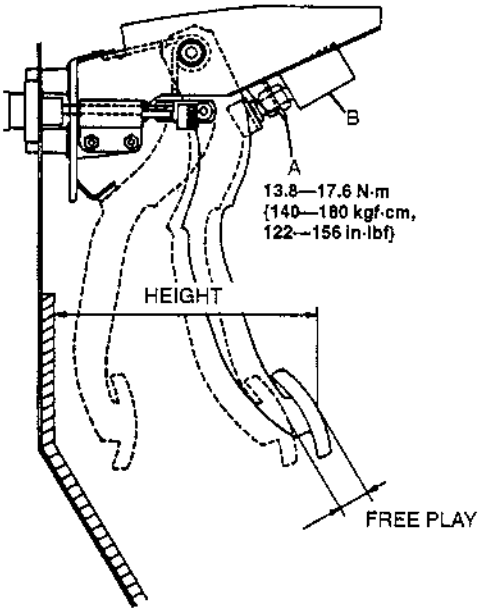

X5U510WA3

2. As necessary, adjust the height.

Clutch Pedal Free Play Inspection

1. Depress the clutch pedal by hand until clutch resistance is felt.

   Free play
   0.6—3.1 mm {0.02—0.12 in}
   Total free play
   5—13 mm {0.20—0.51 in}

2. Adjust the free play as necessary. (Refer to 05–10 CLUTCH PEDAL ADJUSTMENT, Clutch Pedal Free Play Adjustment.)

CLUTCH PEDAL ADJUSTMENT

X5U510W06

Clutch Pedal Height Adjustment

1. Disconnect the clutch switch connector.
2. Loosen locknut A and turn clutch switch B until the height is correct.
3. Tighten locknut A.

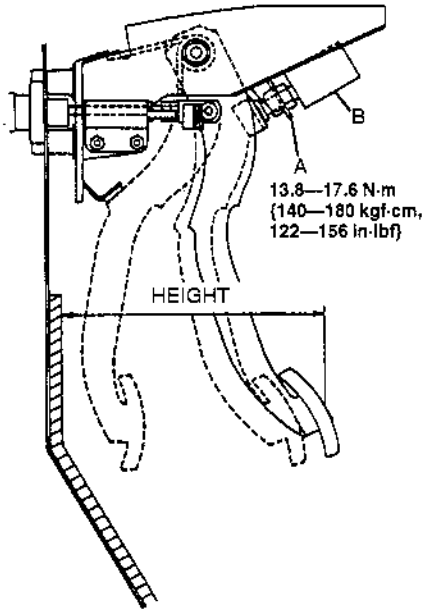

X5U510WA4

Tightening torque
13.8—17.6 N·m
{140—180 kgf·cm, 122—156 in·lbf}

4. After adjustment, inspect the free play.

Clutch Pedal Free Play Adjustment

1. Loosen locknut C and turn push rod D until the free play is correct.
2. Verify that the disengagement height as measured from the upper surface of the pedal pad to the carpet is correct when the pedal is fully depressed.

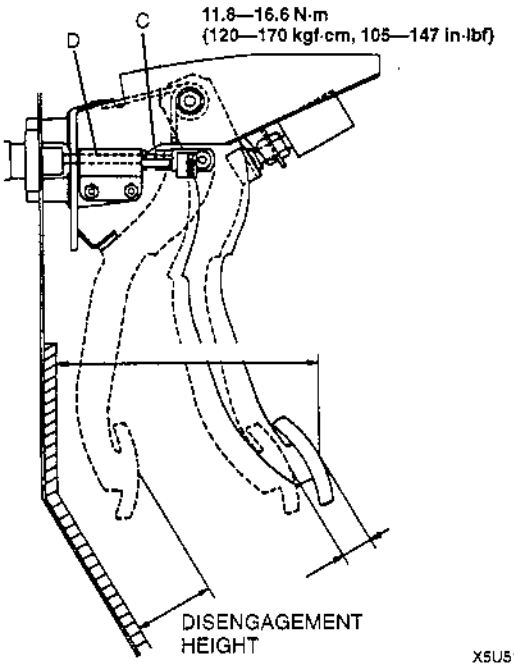

X5U510WA5

Minimum disengagement height
68 mm {2.68 in} (With carpet)

3. Tighten locknut C.

Tightening torque
11.8—16.6 N·m
{120—170 kgf·cm, 105—147 in·lbf}

4. After adjustment, inspect the height.

CLUTCH PEDAL REMOVAL/INSTALLATION

X5U510W07

1. Disconnect the negative battery cable.
2. Remove in the order indicated in the table.
3. Install in the reverse order of removal.

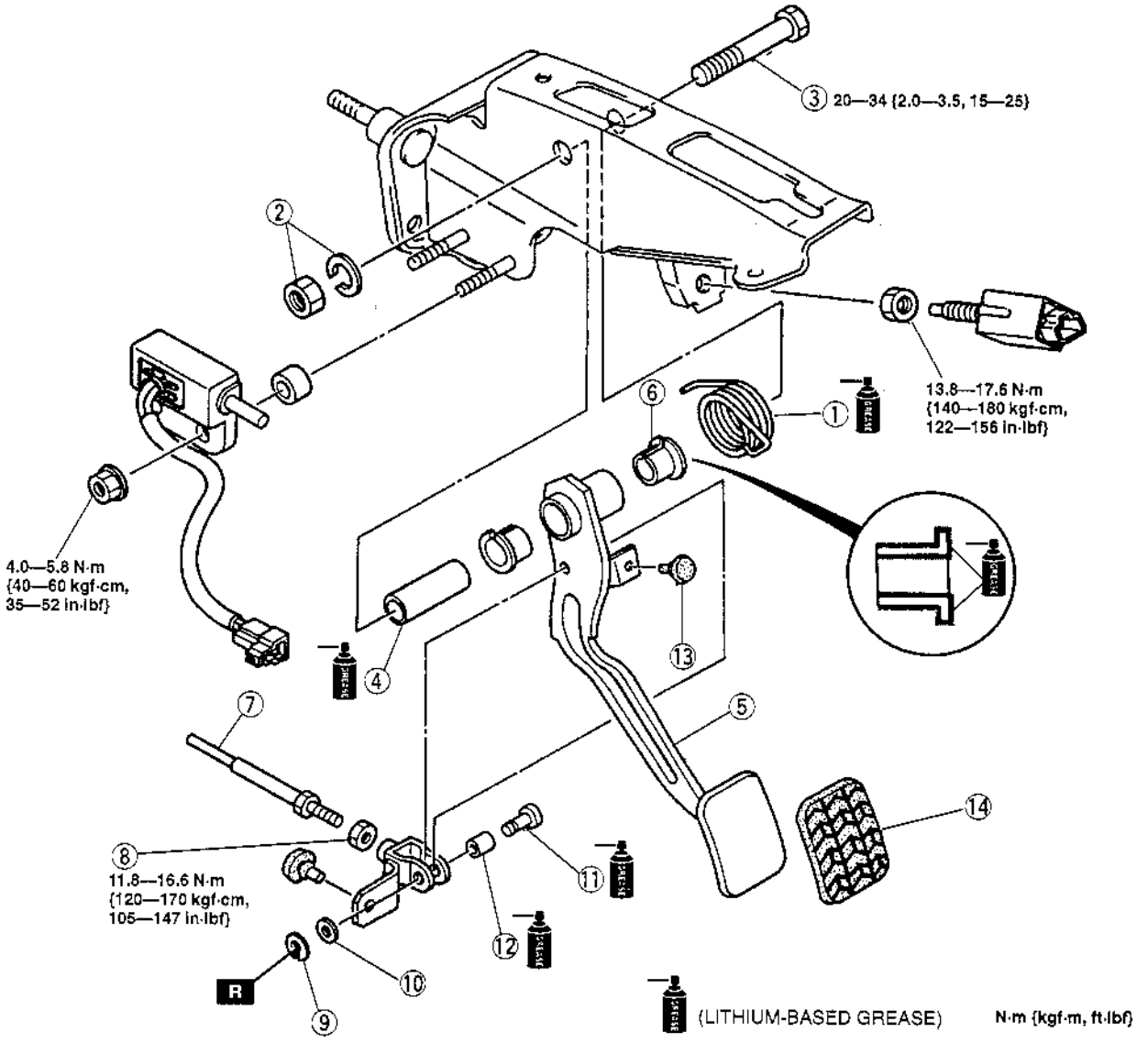

X5U510WA6

1	Spring ☞ Removal Note ☞ Installation Note
2	Nut and lock washer
3	Bolt
4	Spacer
5	Clutch pedal
6	Bushing
7	Push rod

8	Nut
9	Clip
10	Wave washer
11	Pin
12	Spacer
13	Stop
14	Pedal pad

Spring Removal Note

1. Place the clutch pedal component in a vise.
2. Pry the spring off the clutch pedal as shown in the figure.

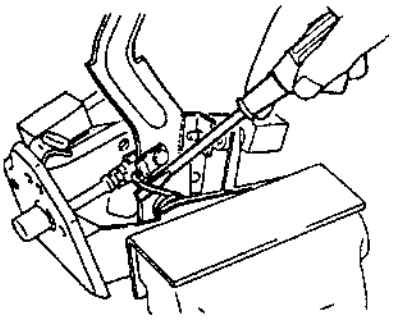

X5U510WA7

Spring Installation Note

1. Place the clutch pedal component in a vise.
2. Install the spring onto the clutch pedal as shown in the figure.
3. Adjust the clutch pedal height and free play after installation.

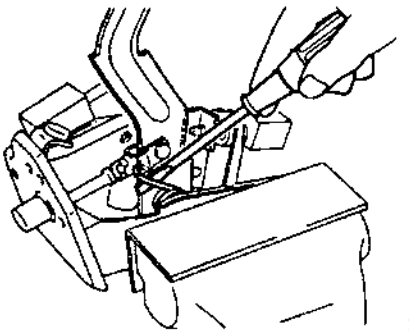

X5U510WA8

CLUTCH MASTER CYLINDER REMOVAL/INSTALLATION

X5U510W08

Caution

- **Clutch fluid will damage painted surfaces. If clutch fluid does get on a painted surface, wipe it off immediately.**

1. Remove in the order indicated in the table.
2. Install in the reverse order of removal.
3. Inspect and adjust the clutch pedal height and free play. (Refer to 05–10 CLUTCH PEDAL ADJUSTMENT.)

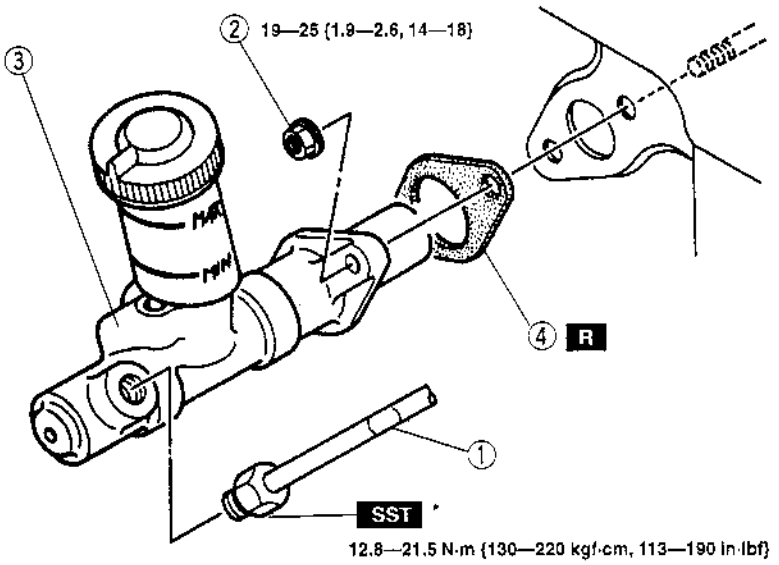

N·m {kgf·m, ft·lbf}

* 49 0259 770B

X5U510WA9

1	Clutch pipe
2	Nut

3	Clutch master cylinder ☞ 05–10 CLUTCH FLUID AIR BLEEDING
4	Gasket ☞ Installation Note

Gasket Installation Note

- Install the gasket as shown.

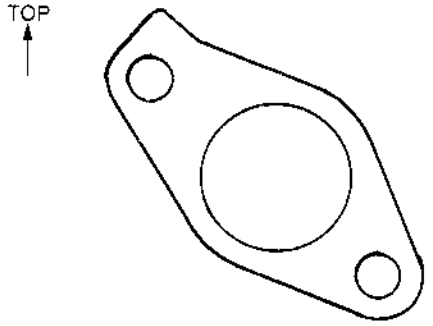

X5U510WAA

CLUTCH MASTER CYLINDER DISASSEMBLY/ASSEMBLY

X5U510W09

1. Disassemble in the order indicated in the table.

Warning

- **Applying compressed air to the cylinder component can make the contents suddenly pop out, possibly causing injury. Hold a rag over the cylinder opening when using compressed air.**

2. Wipe all parts, and use compressed air to clean all ports, passages, and inner parts.
3. Assemble in the reverse order of disassembly.

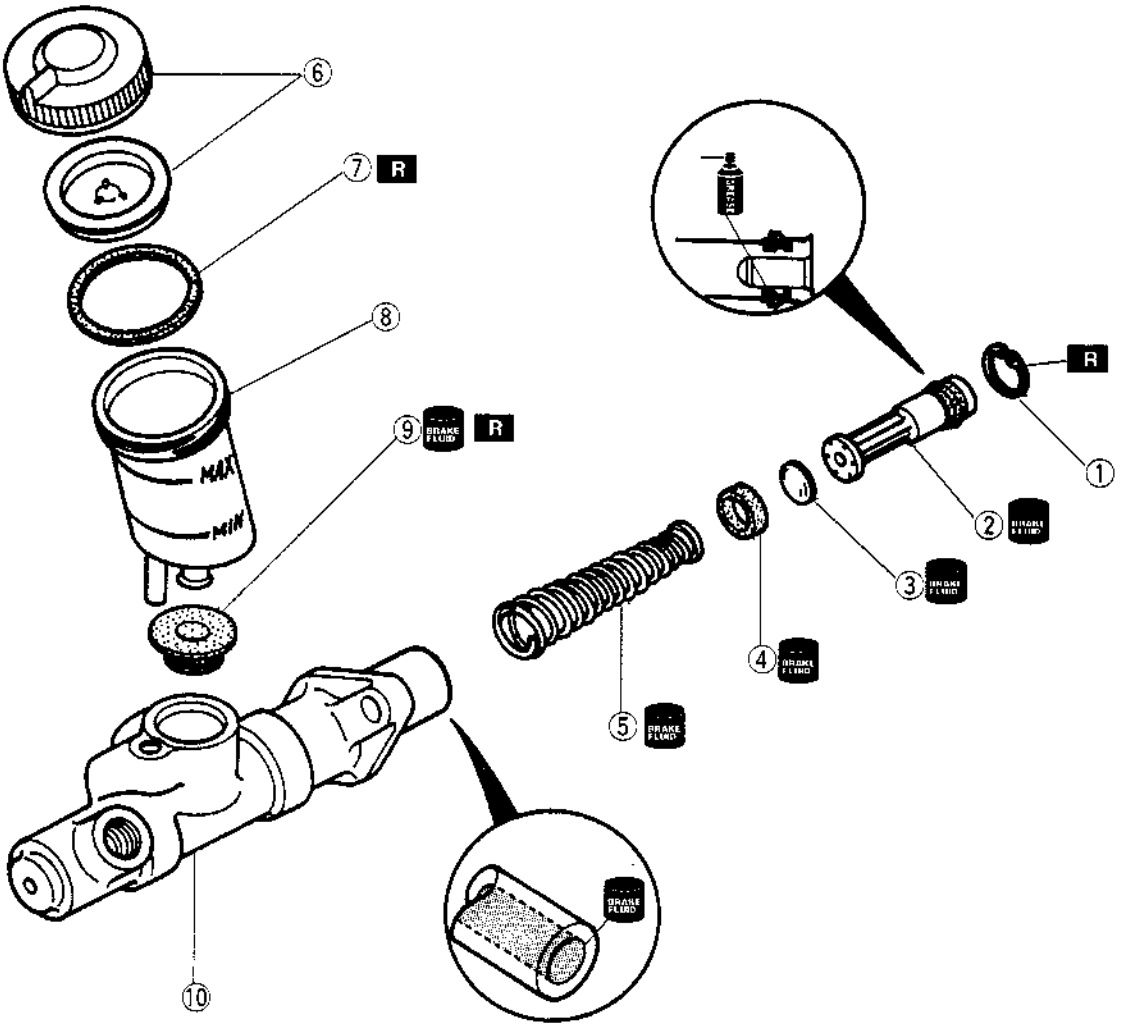

X5U510WAB

1	Snap ring ☞ Disassembly/Assembly Note
2	Piston and secondary cup component
3	Spacer
4	Primary cup
5	Return spring
6	Cap
7	Packing
8	Reservoir
9	Bushing
10	Master cylinder body

Snap Ring Disassembly/Assembly Note

- While holding the piston down with a cloth-wrapped Phillips screwdriver, remove the snap ring.

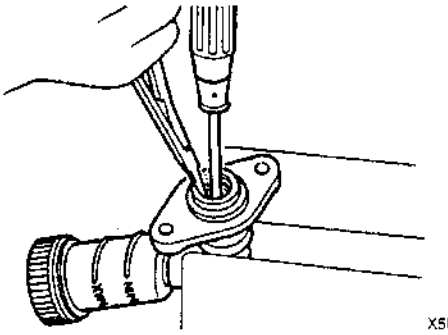

X5U510WAC

CLUTCH RELEASE CYLINDER REMOVAL/INSTALLATION

X5U510W10

Caution

- **Clutch fluid will damage painted surfaces. If clutch fluid does get on a painted surface, wipe it off immediately.**

1. Remove in the order indicated in the table.
2. Install in the reverse order of removal.

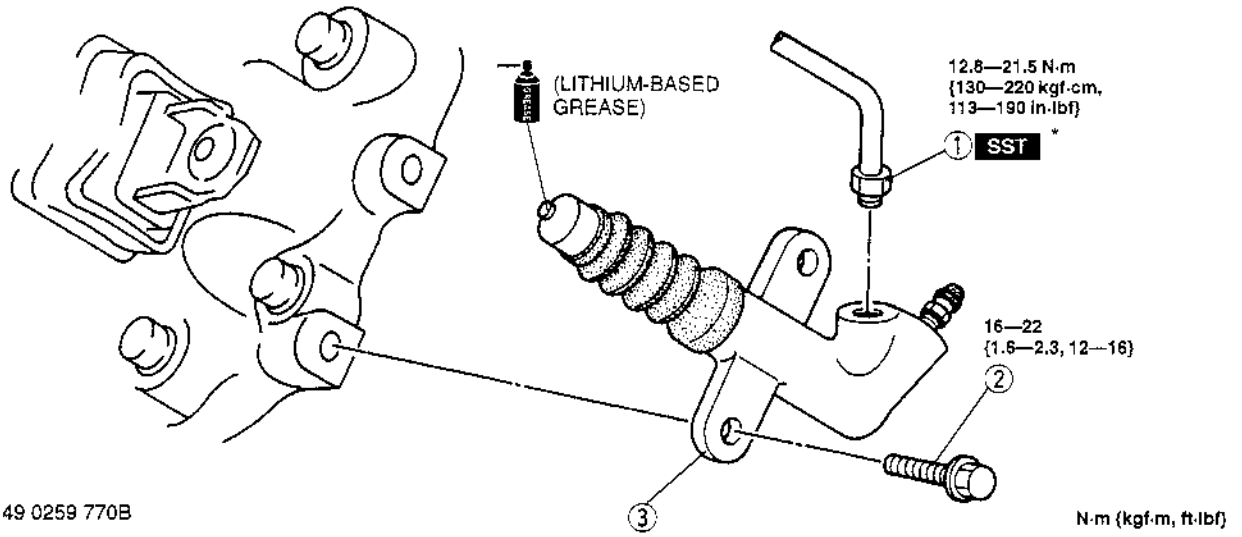

X5U510WAD

1	Clutch pipe
2	Bolt

3	Clutch release cylinder ☞ 05–10 CLUTCH FLUID AIR BLEEDING

CLUTCH RELEASE CYLINDER DISASSEMBLY/ASSEMBLY

X5U510W11

1. Disassemble in the order indicated in the table.

Warning

- **Applying compressed air to the cylinder component can make the contents suddenly pop out, possibly causing injury. Hold a rag over the cylinder opening when using compressed air.**

2. Wipe all parts, and use compressed air to clean all ports, passages, and inner parts.
3. Assemble in the reverse order of disassembly.

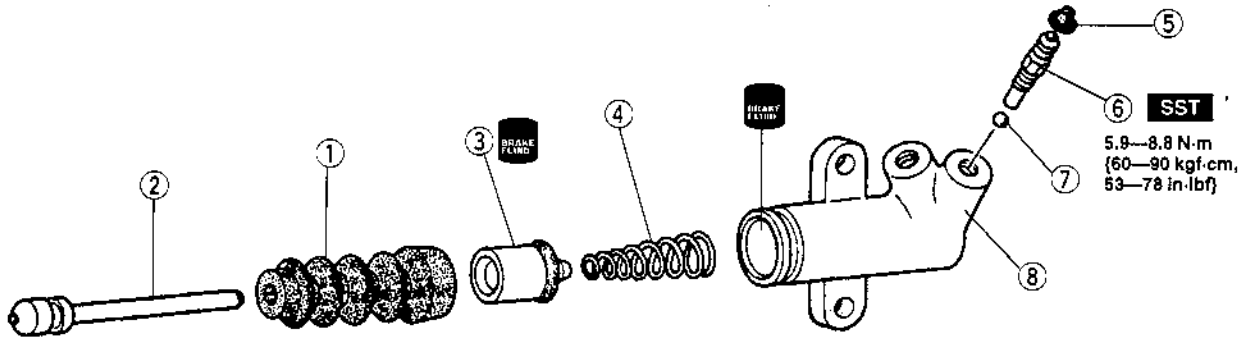

* 49 0259 770B

X5U510WAE

1	Boot
2	Push rod
3	Piston and cup component
4	Spring

5	Bleeder cap
6	Bleeder screw
7	Steel ball
8	Release cylinder body

CLUTCH UNIT REMOVAL/INSTALLATION

X5U510W12

Note

- The clutch release cylinder can be removed from the transmission with the clutch pipe connected.

1. Remove in the order indicated in the table.
2. Install in the reverse order of removal.

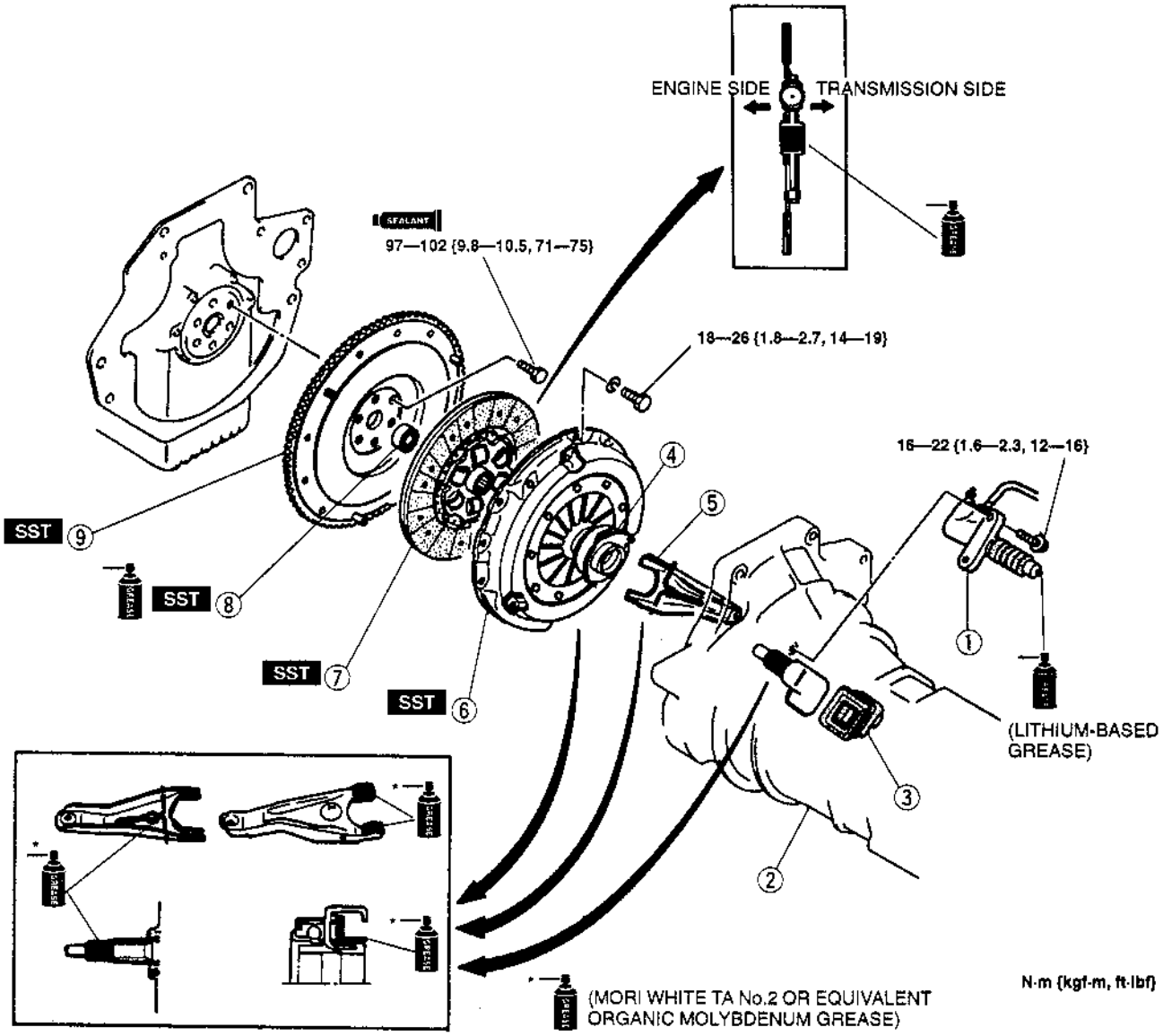

X5U510WAF

1	Clutch release cylinder
2	Transmission ☞ 05–11 MANUAL TRANSMISSION REMOVAL/INSTALLATION
3	Boot
4	Clutch release collar ☞ 05–10 CLUTCH RELEASE COLLAR INSPECTION
5	Clutch release fork
6	Clutch cover ☞ Removal Note ☞ Installation Note

7	Clutch disc ☞ Removal Note ☞ Installation Note
8	Pilot bearing ☞ Removal Note ☞ Installation Note
9	Flywheel ☞ Removal Note ☞ Installation Note

Clutch Cover and Clutch Disc Removal Note

1. Install the **SST**.

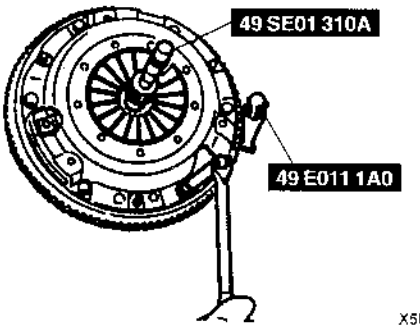

X5U510WAG

2. Hold the flywheel by using the **SST**.
3. Loosen each bolt one turn at a time in a crisscross pattern until spring tension is released. Then remove the clutch cover and disc.

Pilot Bearing Removal Note

Note

- The pilot bearing does not need to be removed unless you are replacing it.

- Remove the pilot bearing by using the **SST**.

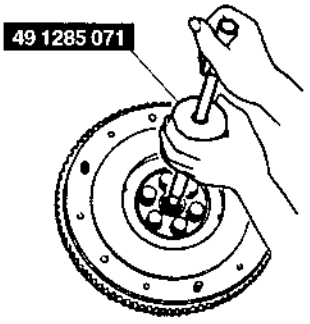

X5U510WAH

Flywheel Removal Note

1. Hold the flywheel by using the **SST**.

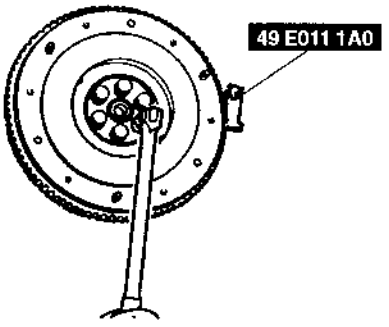

X5U510WAJ

2. Remove the flywheel.
3. Inspect for oil leakage from the crankshaft rear oil seal. If there is any such leakage or if the oil seal is damaged, replace the crankshaft oil seal. (Refer to 01–10 REAR OIL SEAL REPLACEMENT.)

Flywheel Installation Note

1. Wipe the bolts clean, then apply sealant to the bolt threads.
2. Install the flywheel, and secure it by using the **SST**.

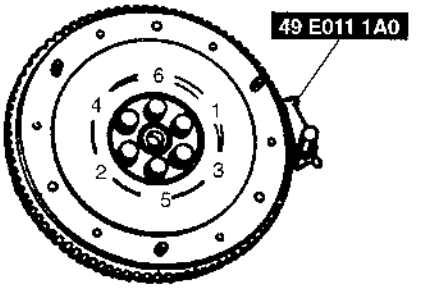

X5U510WAK

3. Tighten the bolts in the pattern shown.

Tightening torque
97—102 N·m {9.8—10.5 kgf·m, 71—75 ft·lbf}

Pilot Bearing Installation Note

- Install a new pilot bearing by using a suitable pipe.

Depth
0—0.4 mm {0—0.016 in}

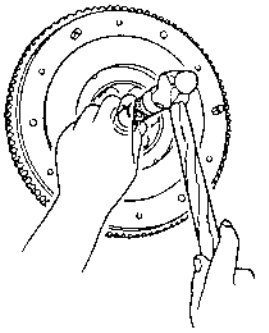

X5U510WAL

Clutch Disc Installation Note

1. Clean the clutch disc splines and main drive gear splines, and apply Mori White TA No.2 or equivalent organic molybdenum grease.
2. Hold the clutch disc in position by using the **SST**.

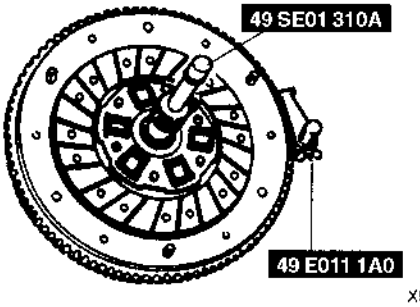

X5U510WAM

Clutch Cover Installation Note

1. Hold the flywheel by using the **SST**.
2. Align the dowel holes with the flywheel dowels.
3. Tighten the bolts evenly and gradually in the pattern shown.

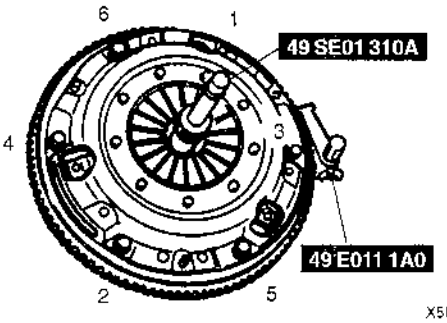

X5U510WAN

Tightening torque
18—26 N·m {1.8—2.7 kgf·m, 14—19 ft·lbf}

CLUTCH COVER INSPECTION

X5U510W13

1. Inspect the contact surface for scoring, cracks, and burning. Repair or replace as necessary.
2. Remove minor scoring or burning by using emery paper. Repair if scoring or burning is major. Replace if cracked.
3. Inspect the tips of the diaphragm spring for wear and cracks.
4. If there is wear or cracks, replace the clutch cover.

CLUTCH DISC INSPECTION

X5U510W14

1. Inspect the lining surface for burning and oil contamination. Repair by using sandpaper if the trouble is minor. Replace the clutch disc if it is badly burned or oil soaked.
2. Inspect for loose facing rivets or torsion dampers. Replace the clutch disc if any are loose.
3. Measure the thickness of the lining at a rivet head on both sides by using vernier calipers. Replace the clutch disc if less than minimum.

Minimum thickness
0.3 mm {0.012 in}

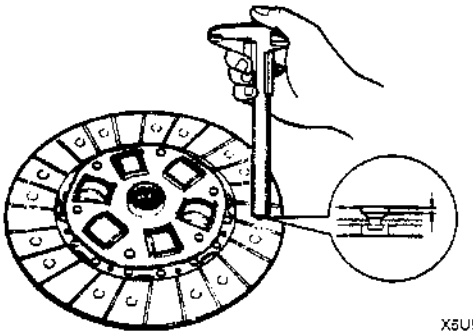

X5U510WAP

4. Measure the clutch disc runout by using a dial indicator. Replace the clutch disc if runout is excessive.

Maximum runout
0.7 mm {0.028 in}

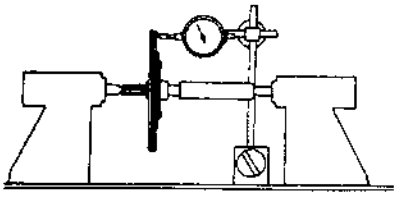

X5U510WAQ

CLUTCH RELEASE COLLAR INSPECTION

X5U510W15

Caution

- **Cleaning the clutch release collar with cleaning fluids or a steam cleaner can wash the grease out of the sealed bearing.**

- Turn the collar while applying force in the axial direction. If the collar sticks or has excessive resistance, replace it.

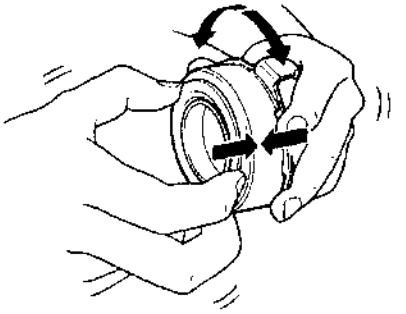

X5U510WAR

PILOT BEARING INSPECTION

X5U510W16

1. Turn the bearing while applying force in the axial direction.
2. If the bearing sticks or has excessive resistance, replace it.

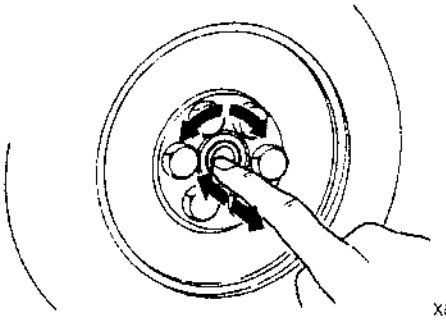

X5U510WAS

FLYWHEEL INSPECTION

X5U510W17

1. Inspect the contact surface for scoring, cracks, and burning.
2. Remove minor scoring or burning by using emery paper. Repair if scoring or burning is major. Replace if cracked.
3. Inspect the ring gear teeth for wear or damage.
4. Measure the flywheel runout by using a dial indicator. Replace the flywheel if runout is excessive.

Maximum runout
0.2 mm {0.008 in}

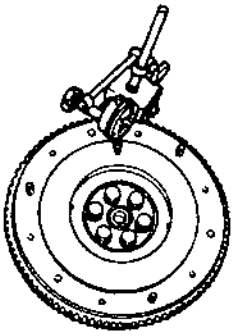

X5U510WAT

05–11 MANUAL TRANSMISSION

TRANSMISSION OIL INSPECTION

X5U511W01

1. Remove the check plug A.

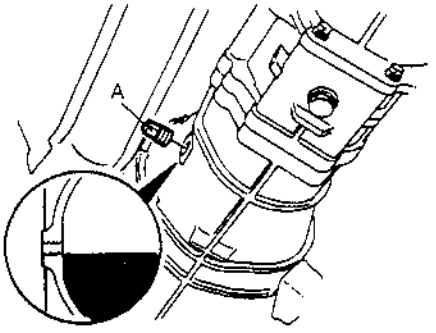

X5U511WA0

2. Verify that the oil is at the brim of the check plug hole as shown. If it is low, add the specified oil from the check plug hole.

Specified oil
Grade:
API service GL-4 or GL-5
Viscosity:
SAE 75W–90 (All season) or
SAE 80W–90 (Above 10 °C {50 °F})
Capacity:
2.0 L {2.1 US qt, 1.8 Imp qt}

3. Wipe the plug clean and apply sealant to the plug threads before installing.

Tightening torque
A: 25—39 N·m {2.5—4.0 kgf·m, 19—28 ft·lbf}

TRANSMISSION OIL REPLACEMENT

X5U511W02

1. Remove the drain plug B (with washer) and the check plug A.

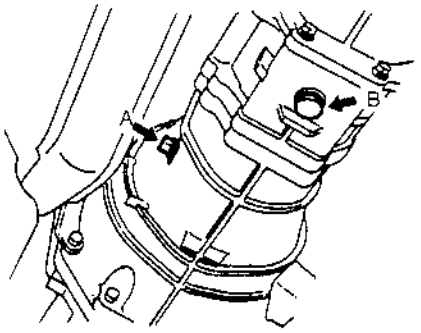

X5U511WA1

2. Drain the oil into a container.
3. Wipe all plugs clean.
4. Install the drain plug B (with new washer).

Tightening torque
B: 40—58 N·m {4.0—6.0 kgf·m, 29—43 ft·lbf}

5. Add the specified oil from check plug A port until the level reaches the brim of check plug hole.

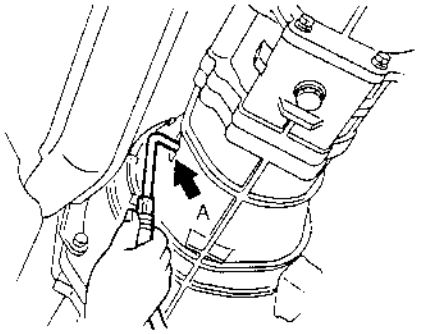

X5U511WA2

Specified oil
Grade:
API service GL-4 or GL-5
Viscosity:
SAE 75W–90 (All season) or
SAE 80W–90 (Above 10 °C {50 °F})
Capacity:
2.0 L {2.1 US qt, 1.8 Imp qt}

6. Apply sealant to the threads of check plug A.
7. Install the check plug A.

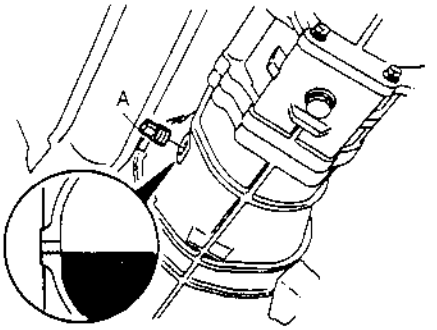

X5U511WA3

Tightening torque
A: 25—39 N·m {2.5—4.0 kgf·m, 19—28 ft·lbf}

OIL SEAL (REAR) REPLACEMENT

X5U511W03

1. Raise the vehicle and support it with safety stands.
2. Remove the propeller shaft. (Refer to 03–15 PROPELLER SHAFT REMOVAL/INSTALLATION.)
3. Remove the oil seal from the extension housing.
4. Apply the specified oil to a new oil seal.
5. Install the new oil seal by using the **SST**.

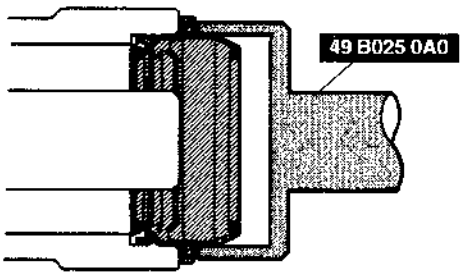

X5U511WA4

6. Install the propeller shaft. (Refer to 03–15 PROPELLER SHAFT REMOVAL/INSTALLATION.)
7. Inspect the oil level. (Refer to 05–11 TRANSMISSION OIL INSPECTION.)

VEHICLE SPEEDOMETER SENSOR REMOVAL/INSTALLATION

X5U51W04

1. Disconnect the negative battery cable.
2. Drain the transmission oil. (Refer to 05–11 TRANSMISSION OIL REPLACEMENT.)
3. Disconnect the vehicle speedometer sensor connector.
4. Remove the vehicle speedometer sensor.
5. Apply transmission oil to a new O-ring and install it on a new vehicle speedometer sensor.
6. Install the vehicle speedometer sensor.

Tightening torque
7.9—10.7 N·m
{80—110 kgf·cm, 69.5—95.4 in·lbf}

7. Connect the vehicle speedometer sensor connector.
8. Add the specified amount and type of transmission oil. (Refer to 05–11 TRANSMISSION OIL REPLACEMENT.)
9. Connect the negative battery cable.

VEHICLE SPEEDOMETER SENSOR INSPECTION

X5U51W05

1. Remove the vehicle speedometer sensor. (Refer to 05–11 VEHICLE SPEEDOMETER SENSOR REMOVAL/INSTALLATION.)
2. Measure voltage between terminals of the vehicle speedometer sensor while the gear is turning.

Meter needle	Action
Moves slightly under 5 V	Inspect wiring harness (Instrument cluster — Vehicle speedometer sensor)
Does not move	Replace vehicle speedometer sensor

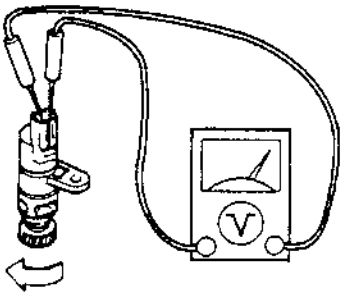

X5U11WAK

3. Install the vehicle speedometer sensor. (Refer to 05–11 VEHICLE SPEEDOMETER SENSOR REMOVAL/INSTALLATION.)

MANUAL TRANSMISSION REMOVAL/INSTALLATION

X5U51W06

1. Drain the transmission oil. (Refer to 05–11 TRANSMISSION OIL REPLACEMENT.)
2. Remove the undercover.
3. Remove the starter. (Refer to 01–19 STARTER REMOVAL/INSTALLATION.)
4. Remove in the order indicated in the table.
5. Install in the reverse order of removal.
6. Add the specified amount and type of transmission oil. (Refer to 05–11 TRANSMISSION OIL REPLACEMENT.)
7. Warm up the engine and transmission, inspect for oil leakage, and verify the transmission operation.

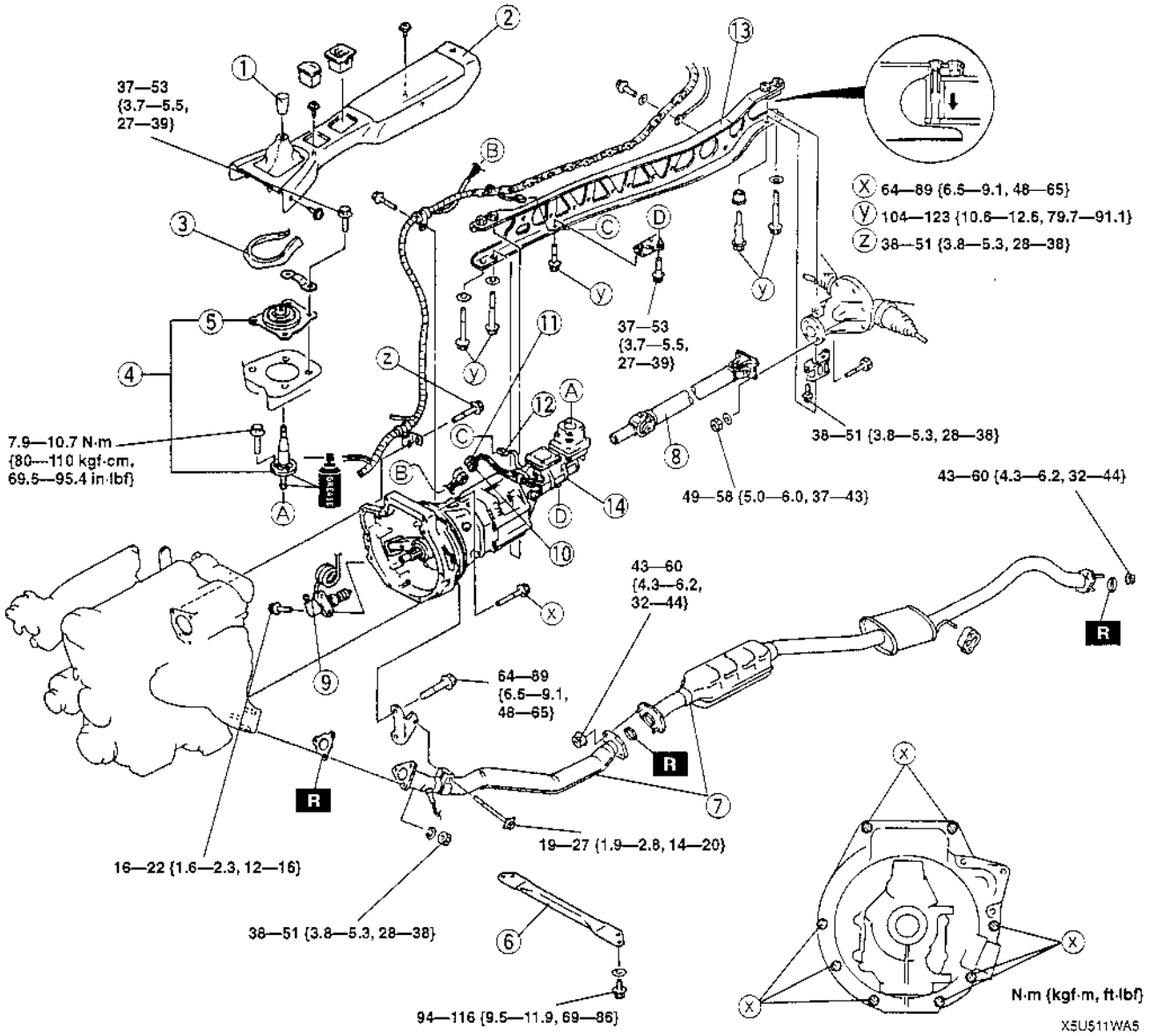

1	Shift lever knob
2	Rear console
3	Insulation
4	Shift lever component ☞ Installation Note
5	Dust boot
6	Front crossbar
7	Front pipe and middle pipe ☞ 01–13 EXHAUST SYSTEM REMOVAL/INSTALLATION
8	Propeller shaft ☞ 03–15 PROPELLER SHAFT REMOVAL/INSTALLATION
9	Clutch release cylinder
10	Back-up light switch connector
11	Neutral switch connector
12	Speedometer sensor connector
13	Power plant frame (PPF) ☞ Removal Note ☞ Installation Note
14	Transmission ☞ Removal Note ☞ Installation Note

Power Plant Frame (PPF) Removal Note

1. Disconnect the wire harness from the PPF.
2. Support the transmission with a jack.

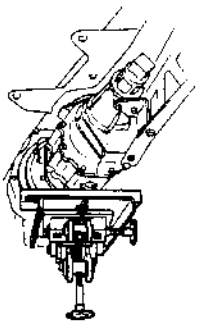

X5U511WA6

3. Remove the PPF bracket.

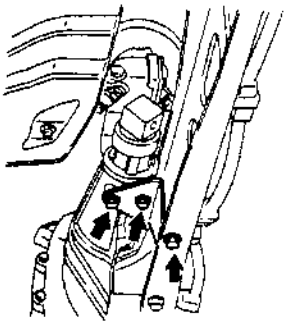

X5U511WA7

4. Remove the differential-side bolts, and pry out the spacer.

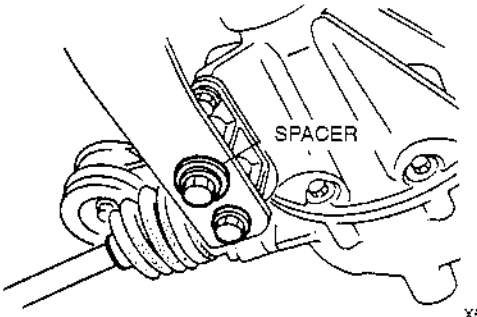

X5U511WA8

5. Remove the differential mounting spacer.

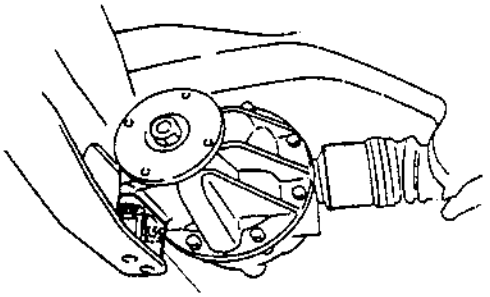

DIFFERENTIAL MOUNTING SPACER X5U511WA9

Caution

- **Removing the PPF spacers will reduce the performance of the PPF. If the spacers are removed, replace the PPF as an component.**

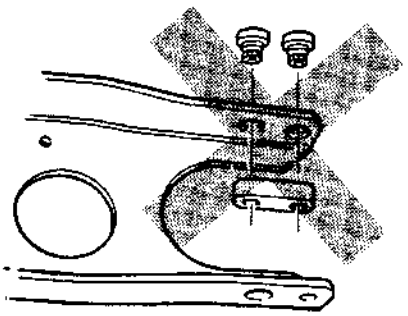

X5U511WAA

6. Remove the transmission-side bolts, and remove the PPF.

Note

- If the sleeve can not be removed easily, tap the side of sleeve with a plastic hammer.

7. Remove the sleeve.

Transmission Removal Note

1. Support the transmission with a transmission jack.
2. Loosen the transmission installation bolts.

Caution

- **Shaking the transmission could damage the crankshaft position sensor on the engine. When removing the transmission, do not shake it up and down or side to side.**

3. Remove the transmission.

Transmission Installation Note

1. Tilt the engine by pushing up on the front of the oil pan with a wooden block and a transmission jack.
2. Support the transmission with a transmission jack.

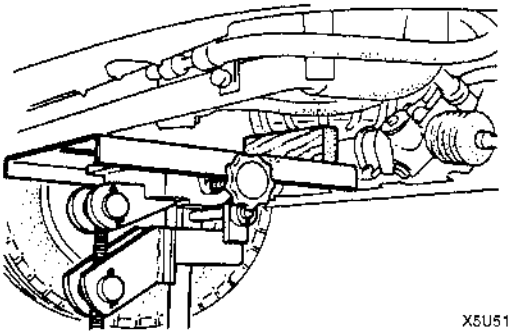

X5U511WAB

3. Raise the transmission into place and install and tighten the installation bolts.

Tightening torque
64—89 N·m {6.5—9.1 kgf·m, 48—65 ft·lbf}

Power Plant Frame (PPF) Installation Note

1. Install the differential mounting spacer.

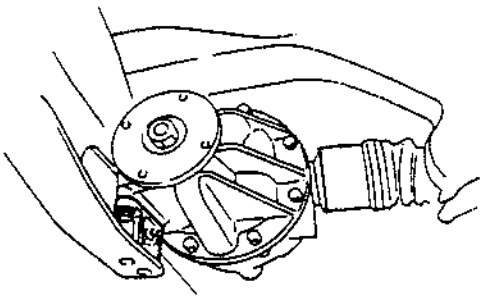

DIFFERENTIAL MOUNTING SPACER X5U511WAC

Tightening torque
38—51 N·m {3.8—5.3 kgf·m, 28—38 ft·lbf}

2. Support the transmission with a jack so that it is level.
3. Position the PPF and install the sleeve.

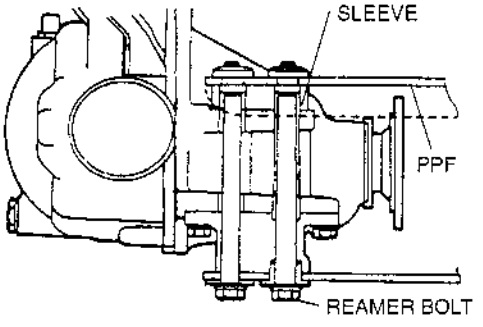

4. Install the spacer and bolts and tighten the reamer bolt making sure the threading is aligned properly. The reamer bolt should be installed in the forward hole.
5. Tighten the outer bolts making sure the threading is aligned properly.
6. Tighten the bolts to the specified torque in the order shown.

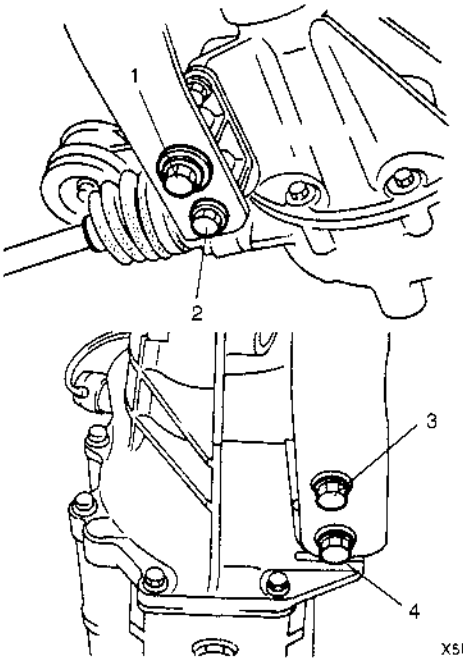

Tightening torque
104—123 N·m
{10.6—12.6 kgf·m, 76.7—91.1 ft·lbf}

7. Install the PPF bracket.

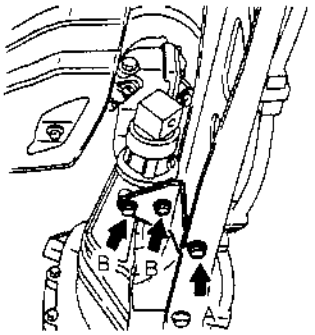

Tightening torque
A: 104—123 N·m
{10.6—12.6 kgf·m, 76.7—91.1 ft·lbf}
B: 37—53 N·m {3.7—5.5 kgf·m, 27—39 ft·lbf}

8. Remove the jack, and connect the wire harness.
9. Measure distance A with a straightedge and vernier calipers.

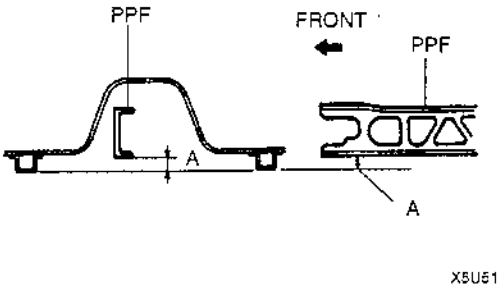

Distance
A: 60.0—72.0 mm {2.37—2.83 in}

10. If the distance is not as specified, reposition the PPF to the transmission.

Shift Lever Component Installation Note

Note
- The change control case must also be filled with the specified amount of oil whenever the extension housing has been removed or the transmission has been overhauled.

1. Pour the specified amount of oil into the change control case.

Specified oil
Grade:
API service GL-4 or GL-5
Viscosity:
SAE 75W–90
Capacity:
80—95 cc {4.9—5.8 cu in}

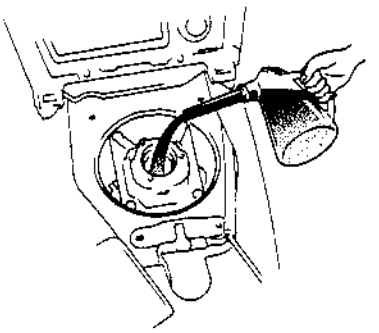

2. Apply grease to the shift lever component as shown in the figure.

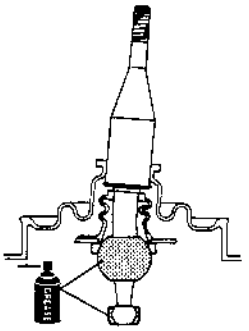

X5U511WAJ

3. Apply sealant to the contact surfaces of the shift lever component and the change control case.
4. Install the shift lever component.

05–13 AUTOMATIC TRANSMISSION

MECHANICAL SYSTEM TEST

X5U513W01

Mechanical System Test Preparation

1. Engage the parking brake and use wheel chocks at the front and rear of the wheels.
2. Inspect the engine coolant. (Refer to 01–12 ENGINE COOLANT LEVEL INSPECTION.)
3. Inspect the engine oil. (Refer to 01–10 ENGINE OIL INSPECTION.)
4. Inspect the ATF levels. (Refer to 05–13 AUTOMATIC TRANSMISSION FLUID (ATF) INSPECTION, ATF Level Inspection.)
5. Inspect the ignition timing. (Refer to 01–10 ENGINE TUNE-UP.)
6. Inspect the idle speed. (Refer to 01–10 ENGINE TUNE-UP.)

Line Pressure Test

1. Perform mechanical system test preparation. (Refer to Mechanical System Test Preparation.)

Warning

- **Removing the plug when the ATF is hot can be dangerous. Hot ATF can come out of the opening and badly burn you. Before removing the plug, allow the ATF to cool.**

2. Connect the **SSTs** to the line pressure inspection port.

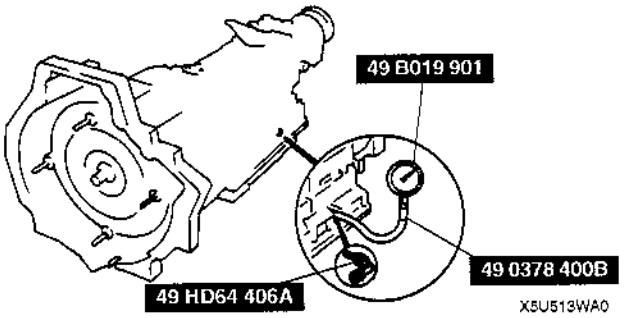

3. Shift the selector lever to D range and read the line pressure at idle.
4. Connect the **SST** to the line pressure inspection port.

Caution

- **If the accelerator pedal is pressed for longer than 5 seconds while the brake pedal is pressed, the transmission could be damaged. Therefore, perform both steps 5 and 6 within 5 seconds.**

5. Firmly depress the brake pedal with the left foot, and then gradually depress the accelerator pedal with the right.
6. When the engine no longer increases, quickly read the line pressure and release the accelerator pedal.
7. Shift the selector to N position and let the engine idle for 1 minute or more to cool the ATF.
8. Read the line pressure at idle and at the engine stall speed for the 2, 1 ranges, and R position in the same manner.

Specified line pressure

Position/range	Line pressure kPa {kgf/cm², psi}	
	Idle	Stall
D, 2, 1	370—400 {3.7—4.1, 53—58}	980—1110 {9.9—11.4, 141—162}
R	510—550 {5.1—5.7, 73—81}	1250—1490 {12.7—15.2, 181—216}

Warning

- **Removing the SST when the ATF is hot can be dangerous. Hot ATF can come out of the opening and badly burn you. Before removing the SST, allow the ATF to cool.**

9. Remove the **SSTs**.
10. Apply ATF to the new O-ring.
11. Install the O-ring to the plug.
12. Install a plug in the inspection port.

Tightening torque
5.9—8.8 N·m {60—90 kgf·cm, 5.3—7.8 in·lbf}

Evaluation of line pressure test

Line pressure	Possible cause
Low pressure in every position	• Primary regulator valve is sticking. • Throttle valve is sticking. • Throttle cable misadjustment • Worn oil pump
Low pressure in D range	• Oil is leaking from hydraulic circuit of D range.
Low pressure in R position	• Oil is leaking from hydraulic circuit of R position.
Higher than specification	• Primary regulator valve is sticking. • Throttle valve is sticking. • Throttle cable misadjustment

Stall Test

1. Perform mechanical system test preparation. (Refer to Mechanical System Test Preparation.)
2. Shift the selector lever to R position.

Caution

- **If the accelerator pedal is pressed for longer than 5 seconds while the brake pedal is pressed, the transmission could be damaged. Therefore, perform both steps 3 and 4 within 5 seconds.**

3. Firmly depress the brake pedal with the left foot, and gently depress the accelerator pedal with the right.
4. When the engine speed no longer increases, quickly read the speed and release the accelerator pedal.
5. Shift the selector to N position and let the engine idle for 1 minute or more to cool the ATF.
6. Perform a stall test of D, 2, and 1 ranges in the same manner.

Engine stall speed
2,370—2,740 rpm

Evaluation of stall test

Condition	Possible cause	
Above specification	In D range	Insufficient line pressure • Forward clutch is slipping • One-way clutch No.2 is slipping.
	In R position	Insufficient line pressure • Direct clutch is slipping. • Reverse brake is slipping.
	In all range and R position	Insufficient line pressure • 4GR clutch or one-way clutch No.0 is slipping.
Below specification		• Engine is out of turn.
		• One-way clutch is slipping within torque converter.

Time Lag Test

1. Perform mechanical system test preparation. (Refer to Mechanical System Test Preparation.)
2. Shift the selector from N position to D range. (O/D OFF switch OFF)
3. Use a stopwatch to measure the time it takes from shifting until shock is felt. Make three measurements for each test and take the average from the results.
4. Perform the test for the following shifts in the same manner.
   (1) N position → D range (O/D OFF SW ON)
   (2) N position → R position

Time lag
N position → D range: 0.7 sec
N position → R position: 1.2 sec

Evaluation of time lag test

Condition	Possible cause
N → D select	• Insufficient line pressure • Forward clutch is slipping. • One-way clutch No. 2 is slipping.
N → R select	• Insufficient line pressure • Direct clutch is slipping. • Reverse brake is slipping.

ROAD TEST

X5U513W02

Road Test Preparation

1. Inspect the engine coolant. (Refer to 01–12 ENGINE COOLANT LEVEL INSPECTION.)
2. Inspect the engine oil. (Refer to 01–10 ENGINE OIL INSPECTION.)
3. Inspect the ATF levels. (Refer to 05–13 AUTOMATIC TRANSMISSION FLUID (ATF) INSPECTION, ATF Level Inspection.)
4. Inspect the ignition timing. (Refer to 01–10 ENGINE TUNE-UP.)
5. Inspect the idle speed. (Refer to 01–10 ENGINE TUNE-UP.)

Shift Diagram

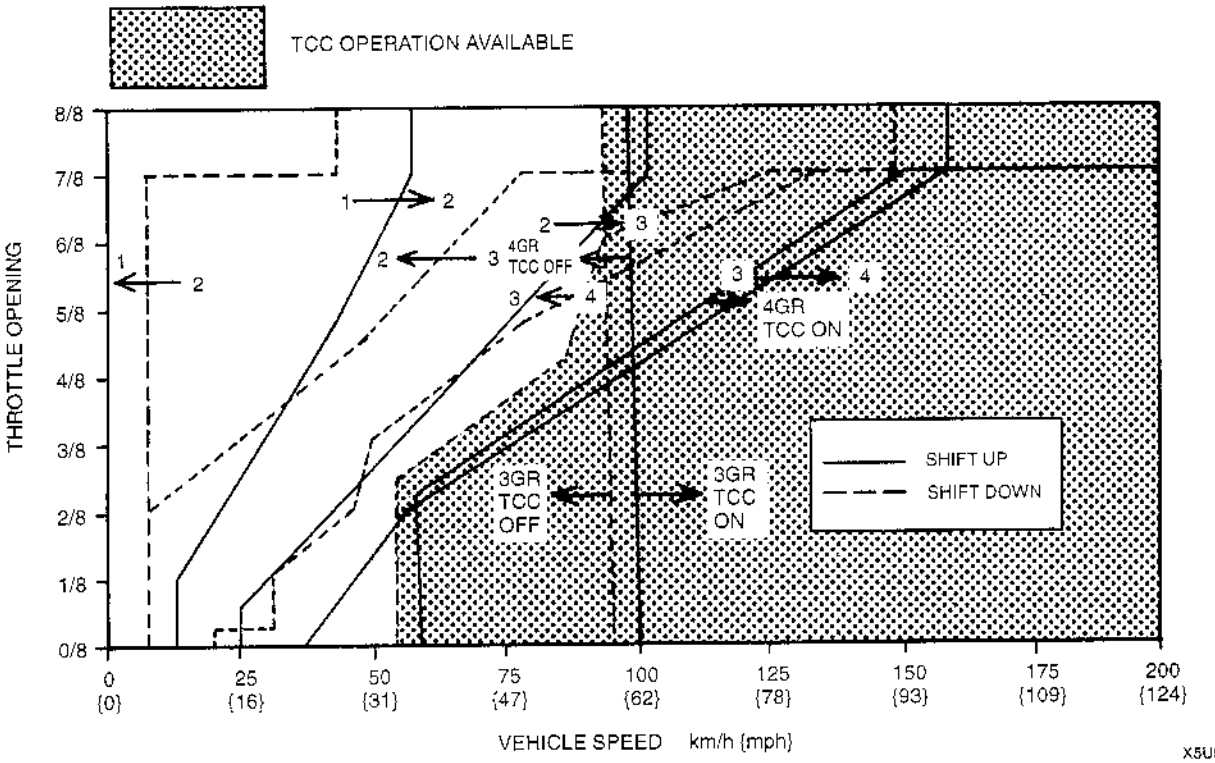

X5U513WA1

D Range Test

1. Perform road test preparation. (Refer to Road Test Preparation.)
2. Shift the selector lever to D range.
3. Accelerate the vehicle with the half, and the wide open throttle.
4. Verify that 1→2, 2→3, and 3→4 upshifts and downshifts are obtained. The shift points must be as shown in the vehicle speed at shift point table.
5. Drive the vehicle in fourth, third, and second gears and verify that kickdown occurs for 4→3, 3→2, 2→1 downshifts, and that the shift points are as shown in the vehicle speed at shift point table.
6. Decelerate the vehicle and verify that engine braking effect is felt in fourth gear.
7. Drive the vehicle and verify that torque converter clutch operation is obtained. The operation points must be as shown in the vehicle speed at shift point table.
8. Select O/D OFF SW ON.
9. Accelerate the vehicle with the half, and the wide open throttle, and verify that 1→2, 2→3 upshift and downshift are obtained. The shift points must be as shown in the vehicle speed at shift point table.

Vehicle speed at shift point table

Range	Mode	Throttle opening angle	Shift	Vehicle speed (km/h {mph})	Shift solenoid A	Shift solenoid B
D	Except O/D OFF	Wide open throttle	$D_1 \rightarrow D_2$	58—64 {36—40}	ON	OFF→ON
			$D_2 \rightarrow D_3$	102—110 {63—68}	ON→OFF	ON
			D_3 TCC operation	98—106 {61—65}	OFF	ON
			$D_3 \rightarrow D_4$	157—167 {97—103}	OFF	ON→OFF
		Half throttle	$D_1 \rightarrow D_2$	33—42 {20—26}	ON	OFF→ON
			$D_2 \rightarrow D_3$	59—76 {37—47}	ON→OFF	ON
			D_3 TCC operation	94—106 {58—65}	OFF	ON
			$D_3 \rightarrow D_4$	65—88 {40—54}	OFF	ON→OFF
			D_4 TCC operation	81—109 {50—67}	OFF	OFF
		Closed throttle position	$D_4 \rightarrow D_3$	17—23 {11—14}	OFF	OFF→ON
			$D_3 \rightarrow D_1$	5—11 {3—7}	OFF→ON	ON→OFF
		Kickdown (Wide open throttle)	$D_4 \rightarrow D_3$	145—155 {90—96}	OFF	OFF→ON
			$D_3 \rightarrow D_2$	95—103 {59—63}	OFF→ON	ON
			$D_2 \rightarrow D_1$	42—48 {26—30}	ON	ON→OFF
	O/D OFF	Wide open throttle	$D_1 \rightarrow D_2$	58—64 {36—40}	ON	OFF→ON
			$D_2 \rightarrow D_3$	102—110 {63—68}	ON→OFF	ON
			D_3 TCC operation	98—106 {61—65}	OFF	ON
		Half throttle	$D_1 \rightarrow D_2$	33—42 {20—26}	ON	OFF→ON
			$D_2 \rightarrow D_3$	59—76 {37—47}	ON→OFF	ON
			D_3 TCC operation	94—106 {58—65}	OFF	ON
		Closed throttle position	$D_4 \rightarrow D_3$	17—23 {11—14}	OFF	OFF→ON
			$D_3 \rightarrow D_1$	5—11 {3—7}	OFF→ON	ON→OFF
		Kickdown (Wide open throttle)	$D_4 \rightarrow D_3$	145—155 {90—96}	OFF	OFF→ON
			$D_3 \rightarrow D_2$	95—103 {59—63}	OFF→ON	ON
			$D_2 \rightarrow D_1$	42—48 {26—30}	ON	ON→OFF

Note

- The shift solenoid electrical ON–OFF pattern in this chart describes the stabilized condition before and after shift control. The pattern may oscillate between ON and OFF momentarily while shifting-up or down.
- This is normal.

2 Range Test

1. Perform road test preparation. (Refer to Road Test Preparation.)
2. Shift the selector lever to 2 range.
3. Accelerate the vehicle with the half, and the wide open throttle.
4. Verify that downshifts are obtained. The shift points must be as shown in the vehicle speed at shift point table.

Vehicle speed at shift point table

Range	Mode	Throttle opening angle	Shift	Vehicle speed (km/h {mph})	Shift solenoid A	Shift solenoid B
2	—	All position	$2_3 \rightarrow 2_2$	101—107 {63—66}	OFF→ON	ON

Note

- The shift solenoid electrical ON–OFF pattern in this chart describes the stabilized condition before and after shift control. The pattern may oscillate between ON and OFF momentarily while shifting-up or down.
- This is normal.

1 Range Test

1. Perform road test preparation. (Refer to Road Test Preparation.)
2. Shift the selector lever to 1 range.
3. Accelerate the vehicle with the half, and the wide open throttle.
4. Verify that downshifts are obtained. The shift points must be as shown in the vehicle speed at shift point table.

Vehicle speed at shift point table

Range	Mode	Throttle opening angle	Shift	Vehicle speed (km/h {mph})	Shift solenoid A	Shift solenoid B
1	—	All position	$1_2 \rightarrow 1_1$	35—41 {22—25}	ON	ON→OFF

Note

- The shift solenoid electrical ON–OFF pattern in this chart describes the stabilized condition before and after shift control. The pattern may oscillate between ON and OFF momentarily while shifting-up or down.
- This is normal.

P Position Test

- Shift into P position on a gentle slope. Release the brake and verify that the vehicle does not roll.

AUTOMATIC TRANSMISSION FLUID (ATF) INSPECTION

X5U513WC3

ATF Condition Inspection

- One way of determining whether the transmission should be disassembled is by noting:

1. If the ATF is muddy or varnished.
2. If the ATF smells strange or unusual.

ATF condition

Condition			Possible cause
Clear red		Normal	—
Light red: pink		Contaminated with water	• Broken oil cooler inside of radiator • Poor breather hose installation: By water contamination, problem could be occurring to parts inside of transmission. It is necessary to overhaul transmission and detect defective parts. If necessary, repair or replace transmission.
Reddish brown	Has burnt smell and metal pieces are found	Deteriorated ATF	Defective powertrain components inside of transmission: Metal pieces cause wide range of problems by plugging up in oil pipe, control valve body, and oil cooler in radiator. • When large amount of metal pieces are found, overhaul transmission and detect defective parts. If necessary, repair or replace transmission. • Implement flushing operation as there is a possibility of having metal pieces plugged in oil pipe and/or oil cooler inside of radiator.
	Has no burnt smell	Normal	• Discoloration by oxidation.

3. If ATF condition is poor, repair as follows.
   (1) Dark color condition
   - Overhaul transmission and repair or replace parts as necessary.

   (2) Light pink and/or reddish-brown condition.
   - Replace ATF.

ATF Level Inspection

Caution

- **The ATF amount varies according to ATF's temperature. Therefore, when checking the ATF level or replacing the ATF, use a thermometer to measure the temperature then adjust the ATF amount to the specified level according to the specified temperature.**

1. Park the vehicle on level ground.
2. Apply the parking brake and position wheel chocks securely to prevent the vehicle from rolling.
3. Adjust the length or thermistor probe measure the same as the dipstick and hold the probe with a paper holder. Insert into the filler tube and measure the temperature.
4. Inspect the ATF level before warming up the engine. In this case, use the cool range (**15—25 °C {59—77 °F}**).
5. Warm up the engine until the ATF reaches **60—70 °C {140—158 °F}**.
6. While depressing the brake pedal, shift the selector lever to each range (P—1), pausing momentarily in each range.
7. Shift back to P position.
8. While the engine is idling, verify that the ATF level is in the HOT **65 °C {149 °F}** range. Adjust ATF level to the specification, if necessary.

ATF type
M-III or equivalent (e.g. Dexron®II)

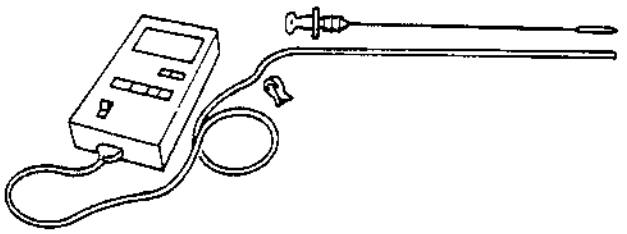

X5U513WA2

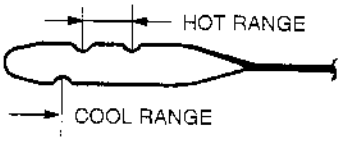

X5U513WA3

AUTOMATIC TRANSMISSION FLUID (ATF) REPLACEMENT

X5U513W04

Warning

- **When the transmission and ATF are hot, they can badly burn you. Turn off the engine and wait until they are cool before changing the ATF.**

1. Remove the dipstick.
2. Remove the drain plug and washer.
3. Drain the ATF into a container.
4. Install a new washer and the drain plug.

Tightening torque
18—22 N·m {1.8—2.3 kgf·m, 14—16 in·lbf}

5. Add the specified amount and type of ATF through the oil filler tube.

ATF type
M-III or equivalent (e.g. Dexron®II)
Fill amount
6.7 L {7.1 US qt, 5.9 Imp qt}

6. Install the dipstick.
7. Ensure that the ATF level is in the HOT **65 °C {149 °F}** range.
8. Add ATF to the specified level if necessary.

THROTTLE CABLE INSPECTION

X5U513W05

1. Verify that the throttle cable is adjusted within dimension A as shown in the figure below when the throttle cable is in closed throttle position.

   Dimension A
   0.8—1.5 mm {0.03—0.05 in}

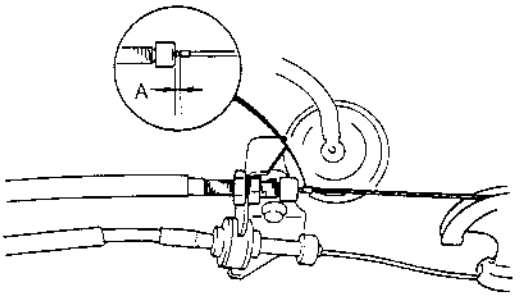

X5U513WA4

2. If it is not within specification, adjust the throttle cable. (Refer to 03–13 THROTTLE CABLE ADJUSTMENT.)

THROTTLE CABLE ADJUSTMENT

X5U513W06

1. Loosen nut A and B.

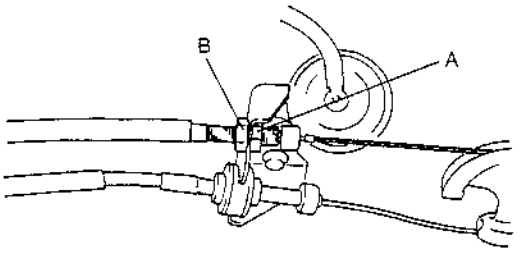

X5U513WA5

2. Put nut B in the direction of the arrow as shown in the figure, with the throttle lever in closed throttle position. Then tighten the nut by hand.

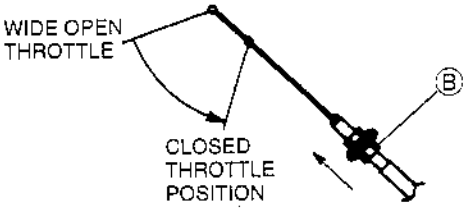

X5U513WA6

Note
- Tighten nut A by pushing it down so that the throttle cable will not come off from the bracket.

3. Tighten nut A with the throttle lever totally closed.

   Tightening torque
   12—16 N·m {1.2—1.7 kgf·m, 8.7—12.2 ft·lbf}

4. Verify that the throttle cable moves smoothly.
5. Verify that there is no deflection, and that the throttle cable is adjusted within dimension A as shown in the figure below when the throttle cable is in closed throttle position.

   Dimension A
   0.8—1.5 mm {0.03—0.05 in}

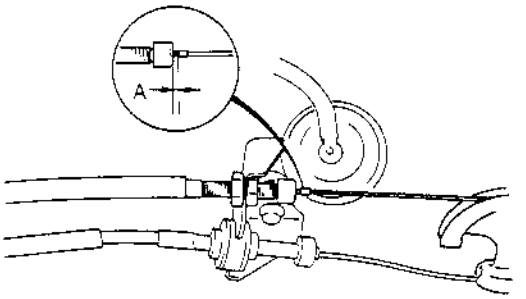

X5U513WA7

THROTTLE CABLE REMOVAL/INSTALLATION

On-Vehicle Removal

1. Disconnect the negative battery cable.
2. Clean the transmission exterior thoroughly with a steam cleaner or cleaning solvents.
3. Drain the ATF into separate suitable containers. (Refer to AUTOMATIC TRANSMISSION FLUID (ATF) REPLACEMENT.)
4. Remove the throttle cable from the throttle lever.
5. Remove the oil pan and gasket.

Caution

- **To prevent deformation of the tube, remove the tube by pulling both ends up.**

6. Remove the tube.

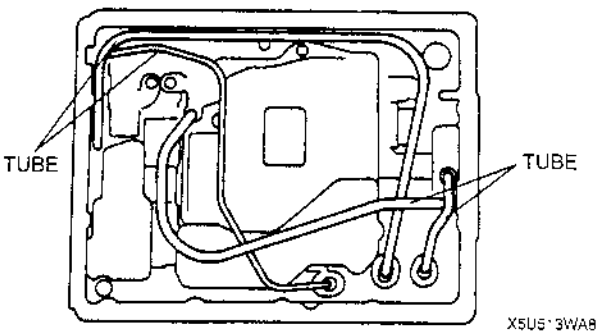

7. Disconnect the shift solenoid A, B, and torque converter clutch solenoid valve connector.
8. Remove the oil strainer.

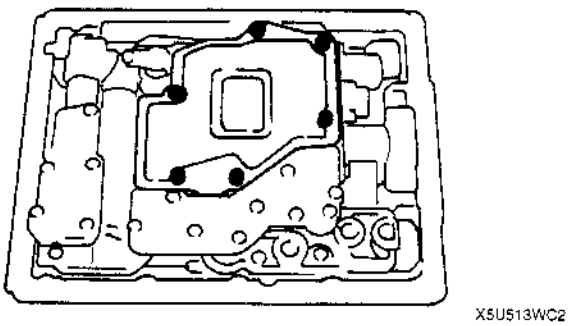

9. Remove the control valve body installation bolts.

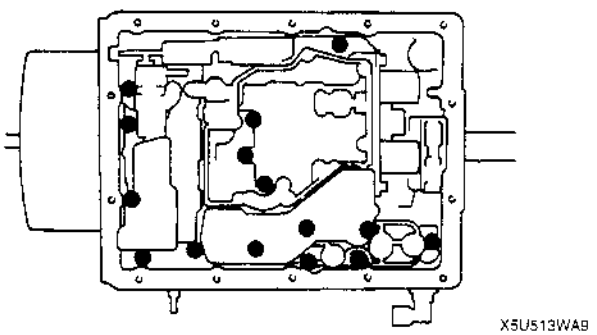

X5U513W07

10. Remove the nipple of the throttle cable from the throttle cam.

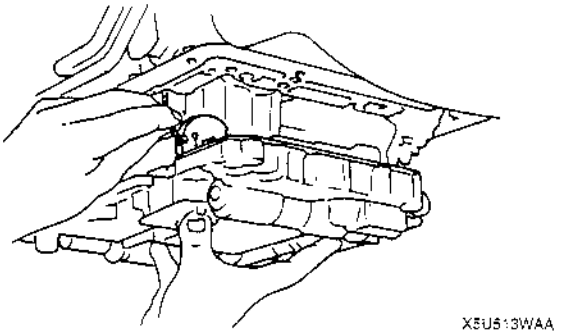

11. Remove the control valve body.
12. Remove the accumulator spring.
13. Remove the throttle cable from the transmission case by using a 10 mm {0.4 in} socket wrench.

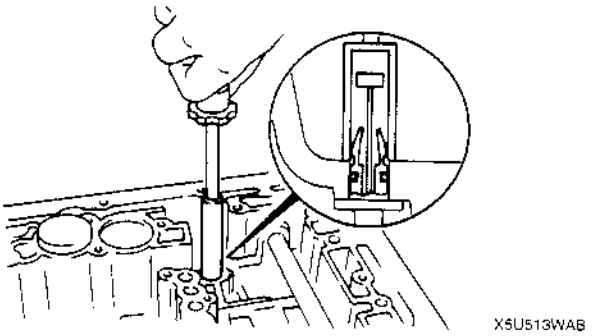

14. Remove the throttle cable.
15. Remove the O-ring from the throttle cable.

On-Vehicle Installation

1. Apply ATF to the new O-ring.
2. Install the O-ring to the throttle cable.
3. Install the throttle cable.
4. Install the nipple of the throttle cable to the throttle cam.

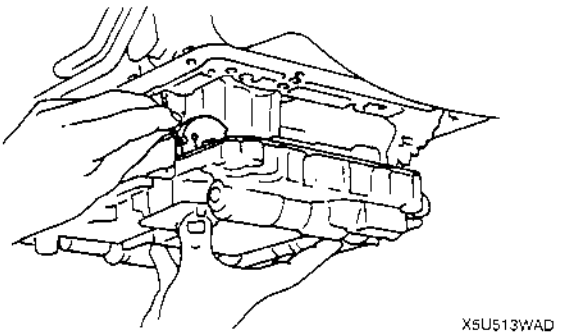

5. Verify that the manual valve and manual shaft are assembled correctly.

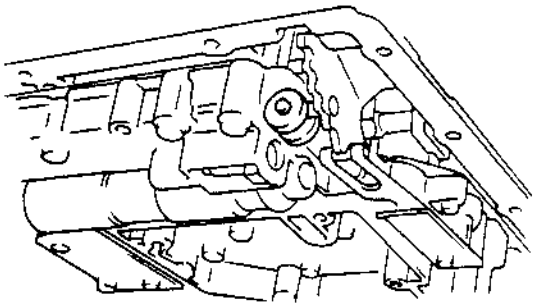

X5U513WAE

6. Install the control valve body.

Tightening torque
7.9—11.7 N·m
{80—120 kgf·cm, 70—104 in·lbf}

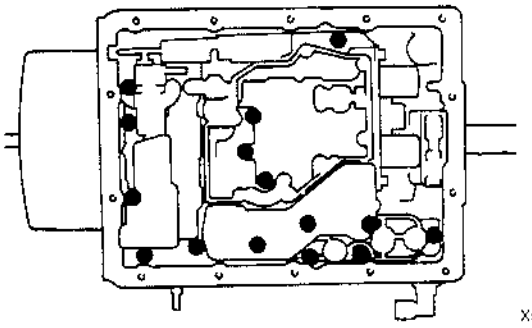

X5U513WA9

Note
- Step 7 is for the throttle cable replacement only.

7. With throttle cable installed to the throttle cam, bend near the center of the throttle cable to a radius of 200 mm {7.87 in}. Then, pull the throttle cable until there is no play or just before the throttle cam starts to move, and stake the adjustment mark at the position shown in the figure.

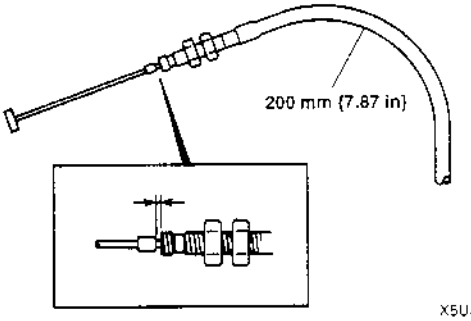

X5U513WAG

8. Install the oil strainer.

Tightening torque
5.0—5.8 N·m {50—60 kgf·cm, 44—52 in·lbf}

9. Connect the shift solenoid A, B, and torque converter clutch solenoid valve connector.

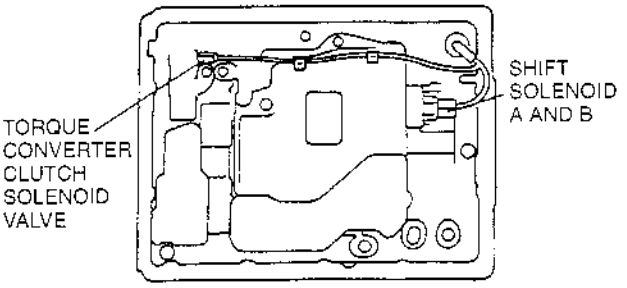

X5U513WAH

10. Install the tube.
11. Install the new gasket and oil pan.

Tightening torque
4.0—4.9 N·m {40—50 kgf·cm, 35—43 in·lbf}

12. Install the throttle cable to the throttle lever.
13. Adjust the throttle cable. (Refer to 05–13 THROTTLE CABLE ADJUSTMENT.)
14. Add ATF to the specified level. (Refer to 05–13 AUTOMATIC TRANSMISSION FLUID (ATF) REPLACEMENT.)
15. Carry out mechanical test. (Refer to 05–13 MECHANICAL SYSTEM TEST.)
16. Carry out road test. (Refer to 05–13 ROAD TEST.)

O/D OFF SWITCH INSPECTION

X5U513W27

Inspection of Operation

1. Turn the ignition switch from OFF to ON.
2. Verify that the O/D OFF indicator light is not illuminated. Depress the O/D OFF switch and verify that the O/D OFF indicator light illuminates.
3. If not as specified, inspect the terminal voltage of the O/D OFF switch.

Inspection of Voltage

1. Remove the rear console.
2. Turn the ignition switch to ON.
3. Measure the voltage at the O/D OFF switch connector.

Position	Connector terminal (V)	
	b	d
Normal	B+	0
Depressed	0	0

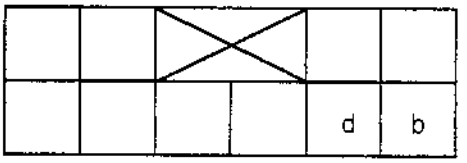

X5U513WC3

4. If not as specified, inspect for continuity at the O/D OFF switch.
5. Install the rear console.

Inspection of Continuity

1. Disconnect the negative battery cable.
2. Remove the rear console.
3. Disconnect the O/D OFF switch connector.
4. Inspect for continuity at the O/D OFF switch.

○—○ : Continuity

Position	Connector terminal	
	b	d
Normal		
Depressed	○	○

X5U513WAJ

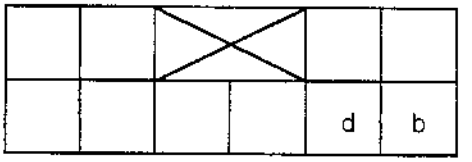

X5U513WAK

5. If not as specified, replace the selector lever knob component.
6. If the switch is okay, inspect the wiring harness. (O/D OFF switch — transmission control module, O/D OFF switch — Body ground.)
7. Install the rear console.
8. Connect the negative battery cable.

O/D OFF SWITCH REMOVAL/INSTALLATION

X5U513W08

1. Disconnect the negative battery cable.
2. Remove the rear console.
3. Disconnect the connector and remove the O/D OFF switch terminals. (Refer to 05–14, SELECTOR LEVER DISASSEMBLY/ASSEMBLY, Connector Disassembly Note.)
4. Remove the selector lever knob component.
5. Install a selector lever knob component.

Tightening torque
2. 0—2.9 N·m {20—30 kgf·cm, 18—26 in·lbf}

6. Install the O/D OFF switch terminals and connect the connector. (Refer to 05–14 SELECTOR LEVER DISASSEMBLY/ASSEMBLY.)
7. Install the rear console.
8. Connect the negative battery cable.

TRANSMISSION RANGE SWITCH INSPECTION

X5U513W09

Inspection of Operation

1. Verify that the starter operates only with the ignition switch at the START position and selector lever in P/N position.
2. Verify that the back-up lights illuminate when shifted to R position with the ignition switch at the ON position.
3. If not as specified, inspect the continuity of the transmission range switch.

X5U513WAL

Inspection of Continuity

1. Inspect the on-board diagnostic trouble code. (Refer to 05–01 AUTOMATIC TRANSMISSION ON-BOARD DIAGNOSTIC.)
2. Remove the transmission range switch. (Refer to 05–13 TRANSMISSION RANGE SWITCH REMOVAL/INSTALLATION.)
3. Inspect for continuity at the transmission range switch.

Range/position	Terminals	Continuity
P	D—C	Yes
	I—B	
	Other	No
R	I—F	Yes
	Other	No
N	D—C	Yes
	I—J	
	Other	No
D	I—H	Yes
	Other	No
2	I—E	Yes
	Other	No
1	I—G	Yes
	Other	No

4. If not as specified, replace the transmission range switch.
5. Install the transmission range switch. (Refer to 05–13 TRANSMISSION RANGE SWITCH REMOVAL/INSTALLATION.)

TRANSMISSION RANGE SWITCH REMOVAL/INSTALLATION

X5U513W10

1. Disconnect the negative battery cable.
2. Disconnect the transmission range switch connector.
3. Remove the selector rod from the manual shaft lever.
4. Remove the manual shaft lever.
5. Remove the staking of the lock washer by using a screwdriver.
6. Remove the nut, lock washer, and packing.
7. Remove the transmission range switch.
8. Rotate the manual shaft to the N position.
9. Hand-tighten the transmission range switch bolt.

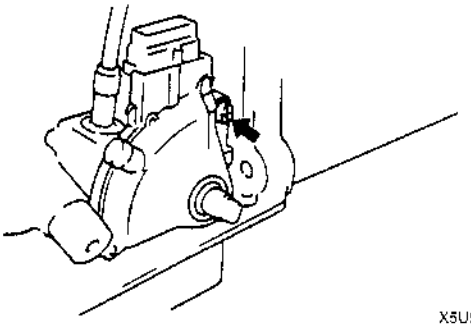

X5U513WAM

10. Install the new packing.
11. Install the new lock washer.
12. Tighten the nut.

Tightening torque
3.0—4.9 N·m {30—50 kgf·cm, 27—43 in·lbf}

13. Bend claws of lock washer.

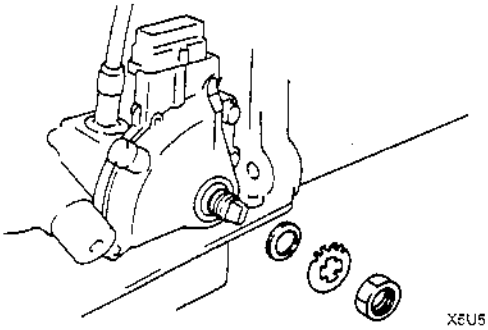

X5U513WAN

14. Adjust the transmission range switch. (Refer to 05–13 TRANSMISSION RANGE SWITCH ADJUSTMENT.)
15. Tighten the transmission range switch mounting bolt.

Tightening torque
4.0—6.8 N·m {40—70 kgf·cm, 35—60 in·lbf}

16. Rotate the manual shaft to the P position.
17. Install the manual shaft lever.
18. Install the selector rod to the manual shaft lever.

TRANSMISSION RANGE SWITCH ADJUSTMENT

X5U513W11

1. Disconnect the negative battery cable.
2. Remove the selector rod from manual shaft lever.
3. Rotate the manual shaft to the N position.
4. Loosen the transmission range switch mounting bolt.
5. Align the cut groove in the switch with the neutral reference line.

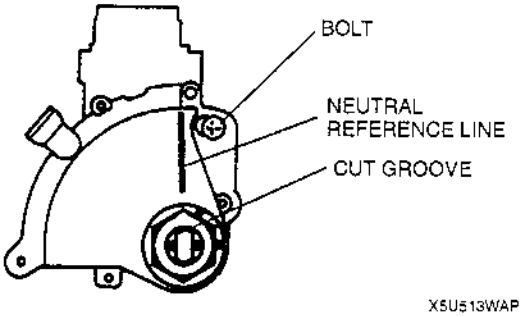

X5U513WAP

6. Tighten the transmission range switch mounting bolt.

Tightening torque
4.0—6.8 N·m {40—70 kgf·cm, 35—60 in·lbf}

7. Install selector rod to the manual shaft lever.
8. Connect the negative battery cable.
9. Inspect the operation of the transmission range switch. (Refer to 05–13 TRANSMISSION RANGE SWITCH INSPECTION.)

INPUT/TURBINE SPEED SENSOR INSPECTION

X5U513W12

1. Disconnect the negative battery cable.
2. Removal the bracket and front pipe. (Refer to 01–15 EXHAUST SYSTEM REMOVAL/INSTALLATION.)
3. Disconnect the input/turbine speed sensor connector.

Note

- Resistance value input/turbine speed sensor varies with temperature. Normal resistance value occurs when the temperature is 20 °C {68 °F}, but it may be abnormal at high temperatures. Therefore, do not determine the resistance value only at 20 °C {68 °F}.

4. Measure the resistance between the terminals of the input/turbine speed sensor.

Resistance
560—680 Ω (20 °C {68 °F})

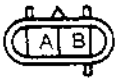

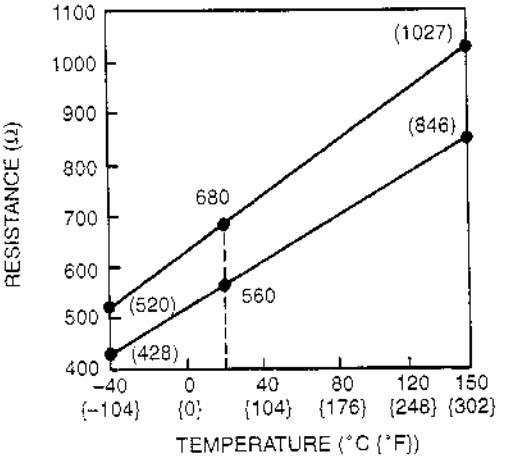

( ): REFERENCE DATA

X5U513WAQ

5. If not correct, replace the input/turbine speed sensor.
6. Connect the input/turbine speed sensor connector.
7. Install the front pipe and bracket. (Refer to 01–15 EXHAUST SYSTEM REMOVAL/INSTALLATION.)
8. Connect the negative battery cable.

INPUT/TURBINE SPEED SENSOR REMOVAL/INSTALLATION

X5U513W13

1. Disconnect the negative battery cable.
2. Remove the bracket and front pipe. (Refer to 01–15 EXHAUST SYSTEM REMOVAL/INSTALLATION.)
3. Disconnect the input/turbine speed sensor connector.
4. Remove the input/turbine speed sensor.
5. Remove the O-ring from the input/turbine speed sensor.
6. Apply ATF to the new O-ring.
7. Install the O-ring to the input/turbine speed sensor.
8. Install the input/turbine speed sensor.

Tightening torque
5.8—8.8 N·m {59—90 kgf·cm, 52—78 in·lbf}

9. Connect the input/turbine speed sensor connector.
10. Install the front pipe and bracket. (Refer to 01–15 EXHAUST SYSTEM REMOVAL/INSTALLATION.)
11. Connect the negative battery cable.

OUTPUT SPEED SENSOR INSPECTION

X5U513W14

1. Disconnect the negative battery cable.
2. Disconnect the output speed sensor connector.
3. Remove the output speed sensor.

Note
- Resistance value output speed sensor varies with temperature. Normal resistance value occurs when the temperature is 20 °C {68 °F}, but it may be abnormal at high temperatures. Therefore, do not determine the resistance value only at 20 °C {68 °F}.

4. Measure the resistance between the terminals of the output speed sensor.

Resistance
387—473 Ω (20 °C {68 °F})

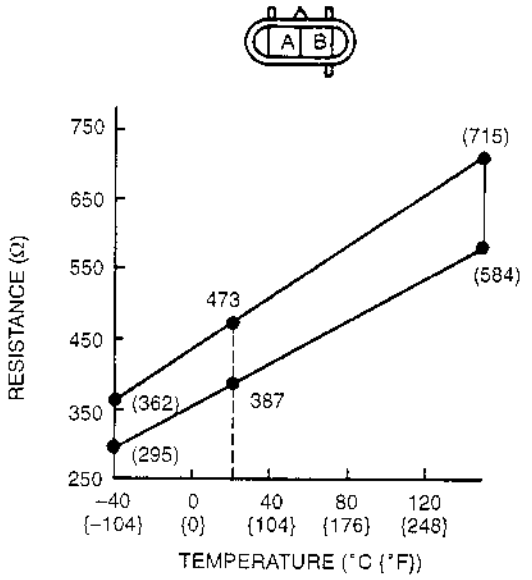

X5U513WAR

5. If not correct, replace the output speed sensor.
6. Install the output speed sensor.

Tightening torque
5.0—6.8 N·m {50—70 kgf·cm, 44—60 in·lbf}

7. Connect the output speed sensor connector.
8. Connect the negative battery cable.

OUTPUT SPEED SENSOR REMOVAL/INSTALLATION

X5U513W15

1. Disconnect the negative battery cable.
2. Disconnect the output speed sensor connector.
3. Remove the output speed sensor from the transmission.
4. Apply ATF to the new O-ring.
5. Install the O-ring to the output speed sensor.
6. Install the output speed sensor to the transmission.

Tightening torque
5.0—6.8 N·m {50—70 kgf·cm, 44—60 in·lbf}

7. Connect the output speed sensor connector.
8. Connect the negative battery cable.

SOLENOID VALVES INSPECTION

X5J513W16

Inspection of Solenoid Valves

1. Inspect the on-board diagnostic trouble code. (Refer to 05–01 AUTOMATIC TRANSMISSION ON–BOARD DIAGNOSTIC.)
2. Disconnect the negative battery cable.
3. Remove the solenoid valves. (Refer to 05–13 SOLENOID VALVES REMOVAL/INSTALLATION.)

Note

- Resistance value solenoid valve varies with temperature. Normal resistance value occurs when the temperature is 20 °C {68 °F}, but it may be abnormal at high temperatures. Therefore, do not determine the resistance value only at 20 °C {68 °F}.

4. Measure the resistance between terminal of the solenoid valve.

Solenoid	Resistance (Ω)
Shift solenoid B	11—15
Shift solenoid A	11—15
Torque converter clutch solenoid valve	11—15

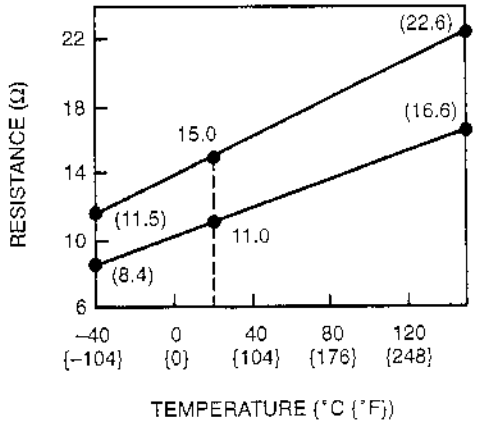

( ): REFERENCE DATA

X5U513WAS

5. If not correct, replace the solenoid valves.
6. Install the solenoid valves. (Refer to 05–13 SOLENOID VALVE REMOVAL/INSTALLATION.)
7. Connect the solenoid valve connector.
8. Connect the negative battery cable.

Operating Inspection

1. Disconnect the negative battery cable.
2. Remove the solenoid valves. (Refer to 05–13 SOLENOID VALVES REMOVAL/INSTALLATION.)
3. Inspect the voltage at terminals A to C and listen for a "click" sound at all solenoid valves.
4. If the "click" is not heard, replace the solenoid valve.

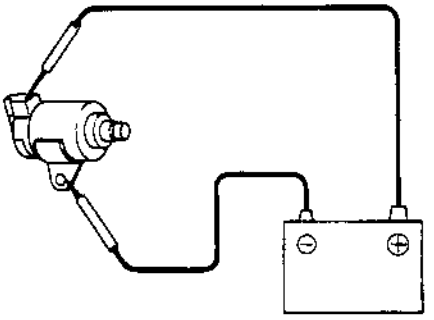

X5U513WAT

5. Install the solenoid valves. (Refer to 05–13 SOLENOID VALVES REMOVAL/INSTALLATION.)
6. Connect the solenoid valve connector.
7. Connect the negative battery cable.

Fail Safe Function

Range	D range				2 range	1 range
Required gear position	1GR	2GR	3GR	4GR	2GR	1GR
Shift solenoid A malfunction	3GR	3GR	3GR	4GR	3GR	1GR
Shift solenoid B malfunction	1GR	4GR	4GR	4GR	3GR	1GR
Both shift solenoid A and B malfunction	4GR	4GR	4GR	4GR	3GR	1GR

SOLENOID VALVES REMOVAL/INSTALLATION

X5U513W17

1. Clean the transmission exterior thoroughly with a steam cleaner or cleaning solvents.
2. Disconnect the negative battery cable.
3. Drain the ATF. (Refer to 05–13 AUTOMATIC TRANSMISSION FLUID (ATF) REPLACEMENT.)
4. Remove the oil pan and gasket.

Caution
- **To prevent deformation of the tube, remove the tube by pulling both ends up.**

5. Remove the tubes.

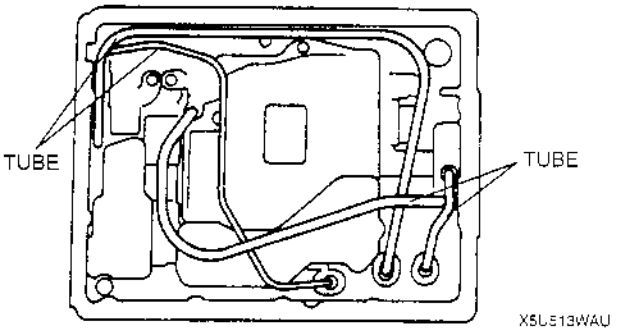

6. Disconnect the shift solenoid A and B and torque converter clutch solenoid valve connector.

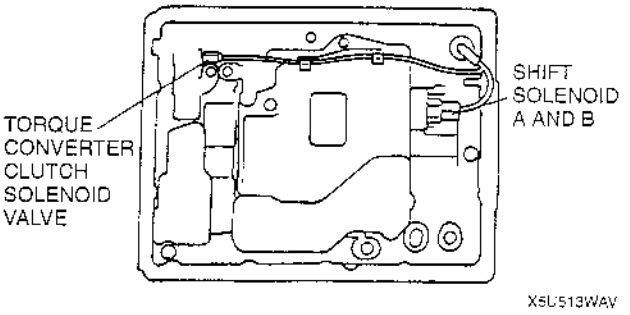

7. Remove the solenoid valve.

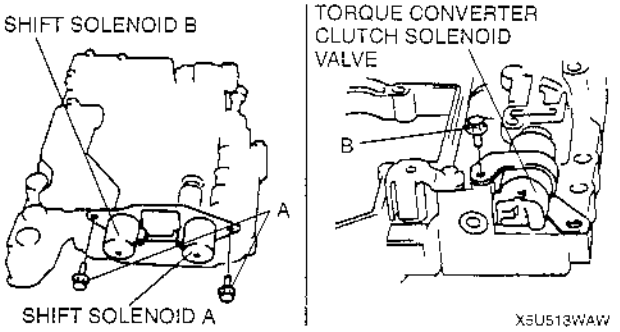

8. Apply ATF to the new O-ring.
9. Install the O-ring to the torque converter clutch solenoid valve.
10. Install the new gasket and solenoid valve to the control valve body.

Tightening torque
A: 7.9—11.5 N·m
{80—120 kgf·cm, 70—104 in·lbf}
B: 5.0—5.8 N·m
{50—60 kgf·cm, 44—52 in·lbf}

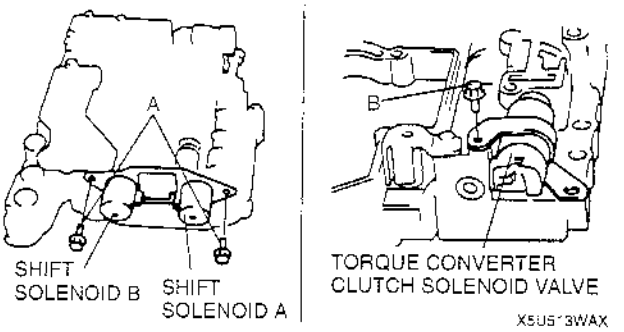

11. Connect shift solenoid A, B and torque converter clutch solenoid valve connector.
12. Install the tubes.

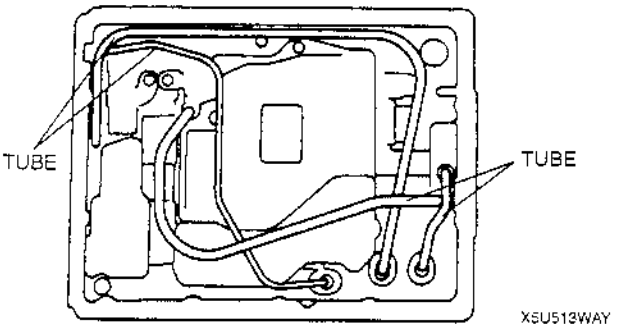

13. Install the new gasket and oil pan.

Tightening torque
4.0—4.9 N·m {40—50 kgf·cm, 35—43 in·lbf}

14. Add ATF to the specified level. (Refer to 05–13 AUTOMATIC TRANSMISSION FLUID (ATF) REPLACEMENT.)
15. Carry out mechanical test. (Refer to 05–13 MECHANICAL SYSTEM TEST.)
16. Carry out road test. (Refer to 05–13 ROAD TEST.)

TRANSMISSION CONTROL MODULE INSPECTION

X5U513W18

1. Turn the ignition switch to ON, and inspect the transmission control module terminal voltage, referring to the Terminal Voltage Chart.
2. If any transmission control module terminal voltage is incorrect, inspect the related input of output devices and wiring. If no problem is found, replace the transmission control module.

Note

- Use the ground of terminal AP of the transmission control module when measuring terminal voltage as an error may occur when the negative (–) lead of the circuit tester is connected to ground.

Terminal Voltage Chart (Reference Data)

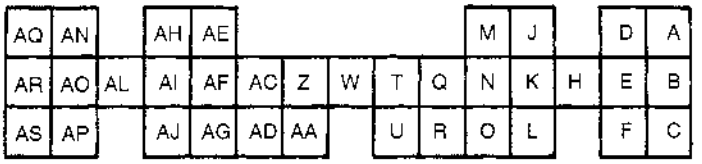

X5U513WAZ

Terminal	Signal	Connected to	Test condition	Voltage (V)	Possible malfunction
A	Transmission range switch (1 range)	Transmission range switch	1 range	B+	• Transmission range switch • Related harness
			All position Other range	0	
B	Transmission range switch (2 range)	Transmission range switch	2 range	B+	• Transmission range switch • Related harness
			All position Other range	0	
C	Transmission range switch (D range)	Transmission range switch	D range	B+	• Transmission range switch • Related harness
			All position Other range	0	
D	Transmission range switch (R position)	Transmission range switch	R position	B+	• Transmission range switch • Related harness
			Other position All range	0	
E	—	—	—	—	—
F	Transmission range switch (P or N position)	Transmission range switch	P or N position	B+	• Transmission range switch • Related harness
			Other position All range	0	
H	—	—	—	—	—
J	—	—	—	—	—
K	O/D OFF switch	O/D OFF switch	O/D OFF switch is released.	B+	• O/D OFF switch • Related harness
			O/D OFF switch is depressed.	0	
L	O/D OFF indicator light	O/D OFF indicator light	O/D OFF indicator light illuminates.	0	• O/D OFF indicator light • Related harness
			O/D OFF indicator light does not illuminate.	B+	
M	—	—	—	—	—
N	—	—	—	—	—
O	PCM/TCM communication	Powertrain control module	Because PCM/TCM communication is carried out by serial communication, the condition of the PCM/TCM communication cannot be decided by inspection of terminal voltage only. Perform inspection according to diagnostic trouble codes as well.	—	• Powertrain control module • Related harness
Q	—	—	—	—	—
R	Throttle position sensor (Vref)	Throttle position sensor	Ignition switch is off.	0	• Throttle position sensor • Related harness
			Ignition switch is on.	4.5—5.5	

Terminal	Signal	Connected to	Test condition	Voltage (V)	Possible malfunction
T	4GR inhibit signal (Auto speed control signal)	Cruise control module	Ignition switch is on.	B+	• Cruise control module • Related harness
			When 4GR inhibit signal is not input	4.5—8.0	
			When 4GR inhibit signal is input	0	
U	Throttle position sensor (TVO)	Throttle position sensor	Closed throttle position	0.3—1.0	• Throttle position sensor • Related harness
			Wide open throttle	3.7—4.4	
W	Input/turbine speed sensor	Input/turbine speed sensor	Ignition switch is on.	2.5	• Input/turbine speed sensor • Related harness
			Engine is running. (P position)	2.5	
Z	Ground (Input/turbine speed sensor)	Input/turbine speed sensor	Constant	2.5	• Input/turbine speed sensor • Related harness
AA	—	—	—	—	—
AC	Vehicle speed signal	Vehicle speed sensor	Ignition switch is on.	0	• Vehicle speed sensor • Related harness
			Driving	2.5	
AD	—	—	—	—	—
AE	Ground (Output speed sensor)	Output speed sensor	Constant	2.5	• Output speed sensor • Related harness
AF	Output speed sensor	Output speed sensor	Ignition switch is on.	2.5	• Output speed sensor • Related harness
			Driving	2.5	
AG	Engine speed signal	Powertrain control module	Ignition switch is on.	4—6.4	• Powertrain control module • Related harness
			Idle	4—6.4	
AH	—	—	—	—	—
AI	—	—	—	—	—
AJ	—	—	—	—	—
AL	PCM/TCM communication	Powertrain control module	Because PCM/TCM communication is carried out by serial communication, the condition of the PCM/TCM communication cannot be decided by inspection of terminal voltage only. Perform inspection according to diagnostic trouble codes as well.	—	• Powertrain control module • Related harness
AN	Shift solenoid B	Shift solenoid B	Solenoid is on.	B+	• Shift solenoid B • Related harness
			Solenoid is off.	0	
AO	Torque converter clutch solenoid valve	Torque converter clutch solenoid valve	Solenoid is on.	B+	• Torque converter clutch solenoid valve • Related harness
			Solenoid is off.	0	
AP	TCM ground		Constant	0	• Related harness
AQ	Shift solenoid A	Shift solenoid A	Solenoid is on.	B+	• Shift solenoid A • Related harness
			Solenoid is off.	0	
AR	Power supply		Constant	B+	• Battery • Related harness
AS	Power supply	Main relay	Ignition switch is off.	0	• Main relay • Related harness
			Ignition switch is on.	B+	

TRANSMISSION CONTROL MODULE REMOVAL/INSTALLATION

X5U513W19

1. Disconnect the negative battery cable.
2. Disconnect the transmission control module connector.
3. Remove the transmission control module.
4. Install the transmission control module.

Tightening torque
36 N·m {3.7 kgf·m, 27 ft·lbf}

5. Connect the transmission control module connector.
6. Connect the negative battery cable.

AUTOMATIC TRANSMISSION REMOVAL/INSTALLATION

X5U513W20

1. Disconnect the negative battery cable.
2. Drain the ATF. (Refer to 05–13 AUTOMATIC TRANSMISSION FLUID (ATF) REPLACEMENT.)
3. Remove the exhaust system. (Refer to 01–15 EXHAUST SYSTEM REMOVAL/INSTALLATION.)
4. Remove the propeller shaft. (Refer to 03–15 PROPELLER SHAFT REMOVAL/INSTALLATION.)

Warning
- **Improperly jacking a transmission is dangerous. It can slip off the jack and cause serious injury.**

5. Remove in the order indicated in the table.
6. Install in the reverse order of removal.
7. Add ATF to the specified level. (Refer to 05–13 AUTOMATIC TRANSMISSION FLUID (ATF) REPLACEMENT.)
8. Connect the negative battery cable.
9. Inspect the operation of the transmission range switch. (Refer to 05–13 TRANSMISSION RANGE SWITCH INSPECTION, Inspection of Operation.)
10. Inspect the operation of the selector lever. (Refer to 03–14 SELECTOR LEVER INSPECTION.)
11. Carry out the mechanical system test. (Refer to 05–13 MECHANICAL SYSTEM TEST.)
12. Carry out the road test. (Refer to 05–13 ROAD TEST.)

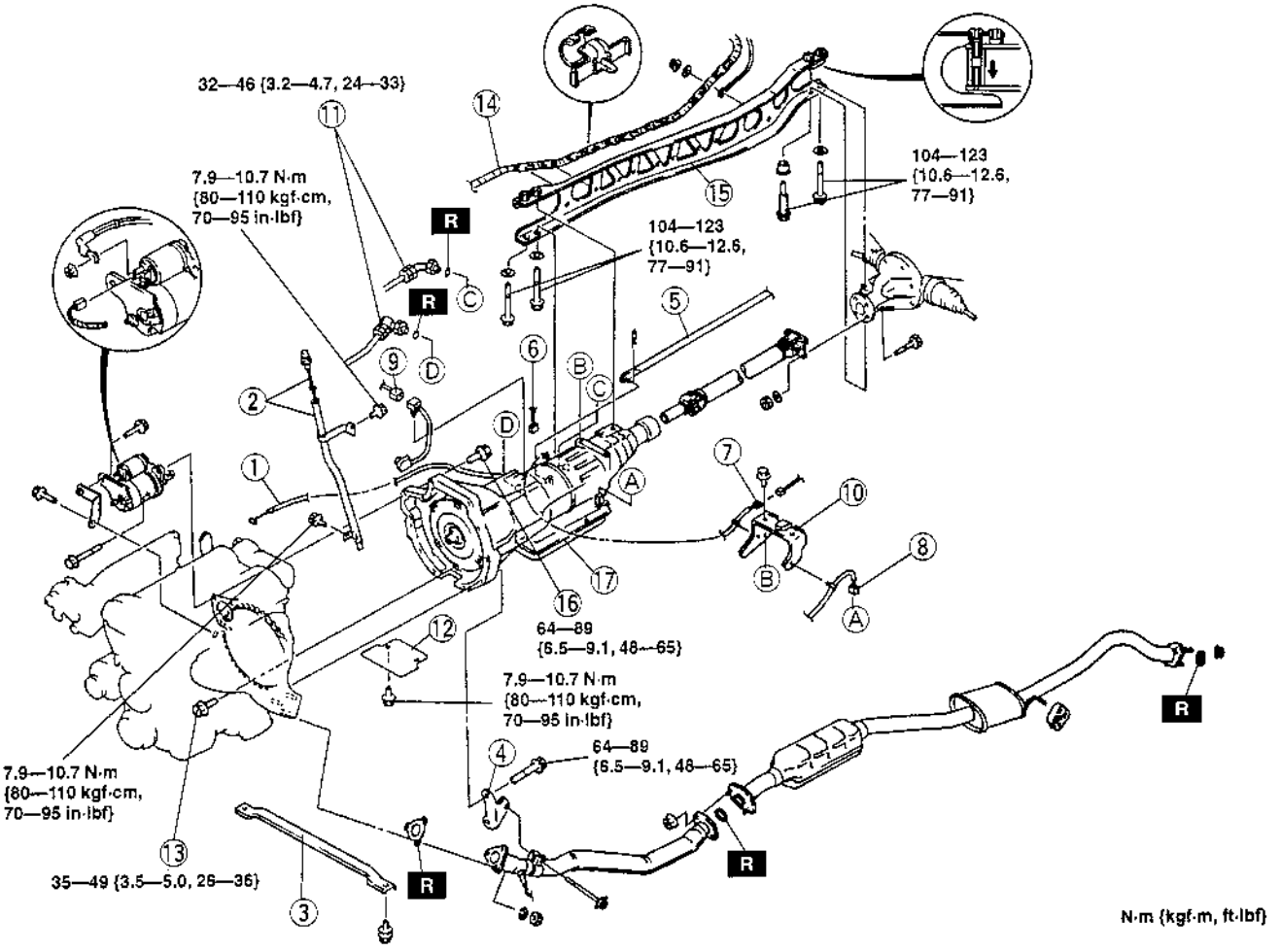

X5U513WB0

1	Throttle cable ☞ THROTTLE CABLE ADJUSTMENT
2	Filler tube, dipstick
3	Performance rod
4	Exhaust bracket
5	Shift rod ☞ Installation Note
6	Transmission range switch connector
7	Output speed sensor connector
8	Solenoid connector
9	Input/turbine speed sensor
10	Harness bracket
11	Oil pipe ☞ OIL COOLER REMOVAL/INSTALLATION
12	Undercover
13	Torque converter bolts ☞ Removal Note ☞ Installation Note
14	Harness
15	Power plant frame ☞ Removal Note ☞ Installation Note
16	Transmission mount bolts
17	Transmission ☞ Installation Note

Power Plant Frame (PPF) Removal Note

1. Disconnect the wire harness from the power plant frame.
2. Support the transmission on a jack.

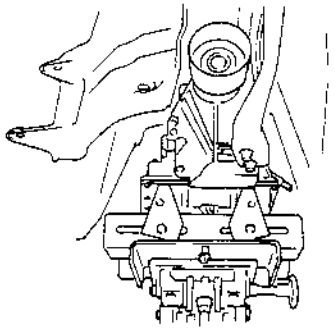

X5U513WB1

3. Remove the front bolts.

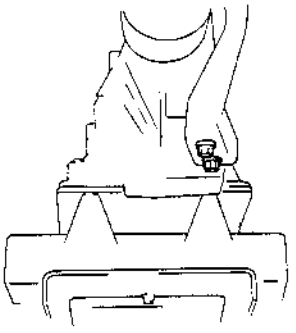

X5U513WB2

4. Remove the differential side bolts, and pry out the bolt spacer.

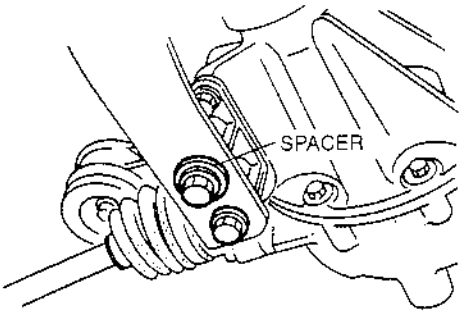

X5U513WB3

5. Remove the differential mounting spacer.

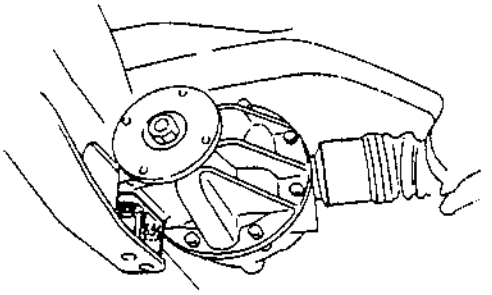

DIFFERENTIAL MOUNTING SPACER X5U513WB4

6. Remove the transmission side bolts, and remove the PPF. Do not remove the spacers from the PPF. If they are removed, replace the PPF as an assembly.

Note

- If the sleeve cannot be removed easily, tap the side of the sleeve with a plastic hammer.

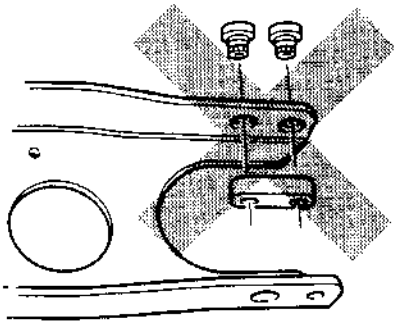

X5U513WB5

7. Remove the sleeve.

Transmission Removal Note

- Set the transmission onto the transmission jack, paying special attention not to damage the oil pipes. Make sure that the torque converter side of the transmission is tilted slightly upward during removal. Carefully lower the transmission from the vehicle.

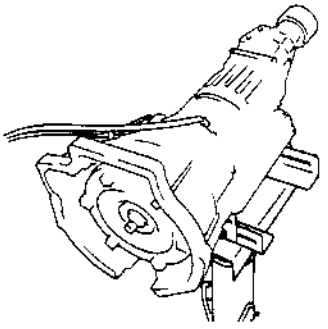

X5U513WB6

Transmission Installation Note

- Set the transmission onto the transmission jack, paying special attention not to damage the oil pipes. Make sure that the torque converter side of the transmission is tilted slightly upward.

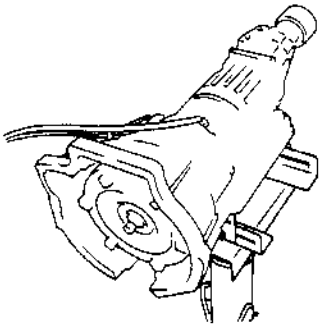

X5U513WB6

Torque Converter Bolts Installation Note

1. Align the holes by turning the torque converter.
2. Lock the drive plate by using a screwdriver.
3. Hand-tighten the torque converter mounting bolts in a crisscross pattern.
4. Modify the torque converter mounting bolts tightening torque to allow for a torque wrench **SST** combination. (00–00 FUNDAMENTAL PROCEDURES, Torque Formulas.)
5. Tighten the torque converter mounting bolts by using the **SST**.

Tightening torque
35—49 N·m {3.5—5.0 kgf·m, 26—36 ft·lbf}

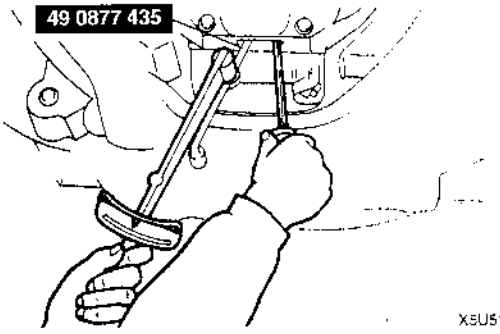

X5U513WB8

Power Plant Frame (PPF) Installation Note

1. Install the differential mounting spacer.

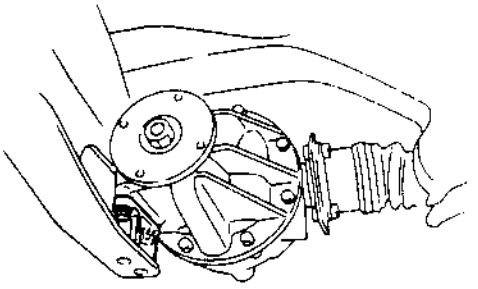

X5U513WB9

2. Support the transmission on a jack so that it is level.
3. Position the PPF and install the sleeve.
4. Install the spacer and bolts, and snugly tighten the reamer bolt. The reamer bolt should be installed in the forward hole.
5. Tighten the outer bolts snugly.

Tightening torque
104—123 N·m
{10.6—12.6 kgf·m, 77—91 ft·lbf}

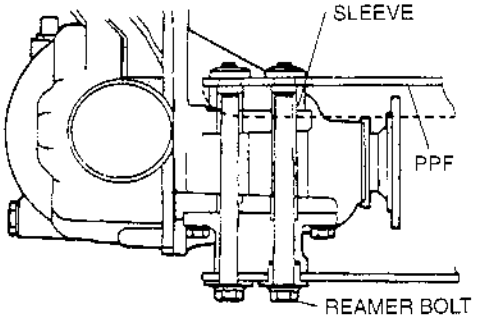

X5U513WBA

6. Tighten the bolts to the specified torque in the order shown.

Tightening torque
104—123 N·m
{10.6—12.6 kgf·m, 77—91 ft·lbf}

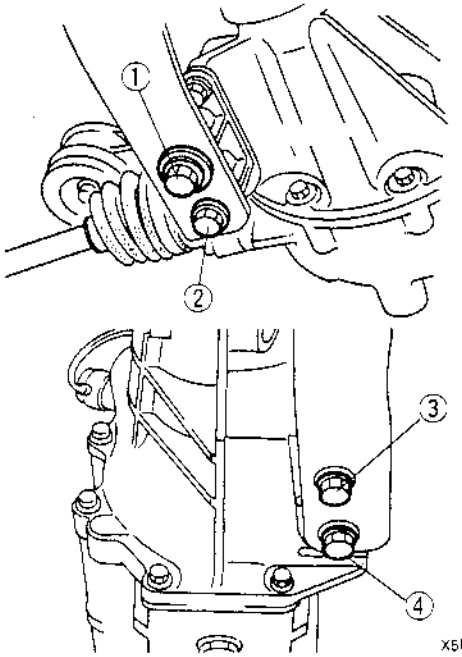

X5U513WBB

7. Remove the jack.
8. Measure distance A by using a straightedge and vernier calipers.

Distance A
50.5—62.5 mm {1.99—2.46 in}

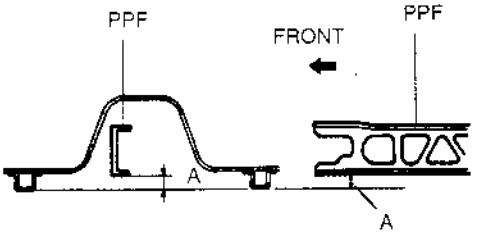

X5U513WBC

9. If the distance is not within the specification, reposition the power plant frame at the transmission.

EXTENSION HOUSING REMOVAL/INSTALLATION

1. Clean the transmission exterior thoroughly by using a steam cleaner or cleaning solvent.
2. Disconnect the negative battery cable.
3. Drain the ATF. (Refer to 05–13 AUTOMATIC TRANSMISSION FLUID (ATF) REPLACEMENT.)
4. Disconnect the speed sensor connector.
5. Remove the exhaust system. (Refer to 01–15 EXHAUST SYSTEM REMOVAL/INSTALLATION.)
6. Remove the propeller shaft. (Refer to 03–15 PROPELLER SHAFT REMOVAL/INSTALLATION.)
7. Support the transmission on a jack.

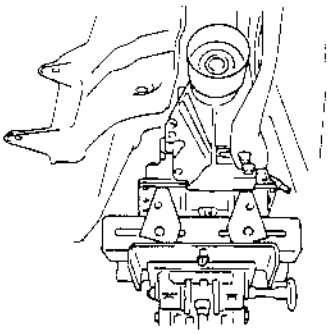
X5U513WAC

8. Remove the power plant frame.
9. Remove the extension housing and gasket.

X5U513W21

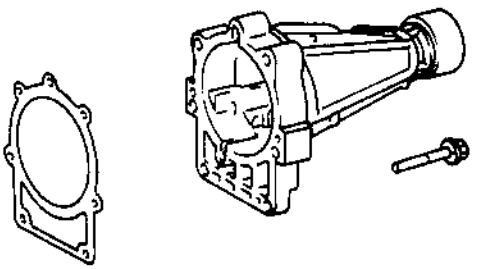
X5U513WBD

10. Install a new gasket and extension housing on the transmission case.

Tightening torque
24—41 N·m {2.4—4.2 kgf·m, 24—41 ft·lbf}

11. Install the power plant frame.
12. Install the propeller shaft. (Refer to 03–15 PROPELLER SHAFT REMOVAL/INSTALLATION.)
13. Install the exhaust system. (Refer to 01–15 EXHAUST SYSTEM REMOVAL/INSTALLATION.)
14. Connect the speed sensor connector.
15. Add ATF to the specified level. (Refer to 05–13 AUTOMATIC TRANSMISSION FLUID (ATF) REPLACEMENT, ATF Level Inspection.)
16. Carry out the line pressure test. (Refer to 05–13 MECHANICAL SYSTEM TEST, Line Pressure Test.)
17. Carry out the road test. (Refer to 05–13 ROAD TEST.)

OIL SEAL (TRANSMISSION) REPLACEMENT

X5U513W28

1. Clean the transmission exterior thoroughly by using a steam cleaner or cleaning solvent.
2. Drain the ATF. (Refer to 05–13 AUTOMATIC TRANSMISSION FLUID (ATF) REPLACEMENT, ATF Level Inspection.)
3. Remove the exhaust pipe. (Refer to 01–15 EXHAUST SYSTEM REMOVAL/INSTALLATION.)
4. Remove the propeller shaft. (Refer to 03–15 PROPELLER SHAFT REMOVAL/INSTALLATION.)
5. Remove the oil seal by using the **SST**.

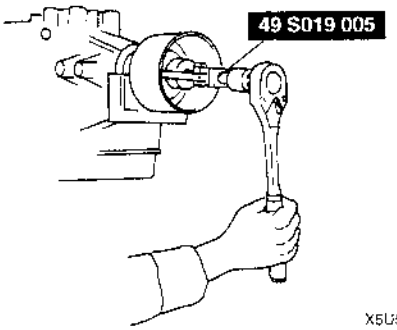

X5U513WBE

6. Apply ATF to the new oil seal lip.
7. Install the oil seal to the position shown in the figure within dimension A as follows by using the convex part of the **SST**.

Dimension A
6. 2—6.8 mm {0.25—0.26 in}

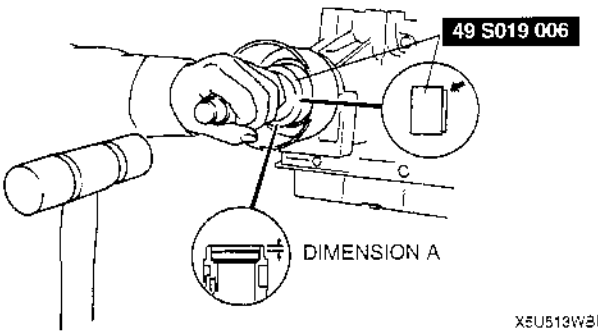

X5U513WBF

8. Install the retainer to dimension B position by using the concave part of the **SST**.

Dimension B
0. 7—1.3 mm {0.03—0.05 in}

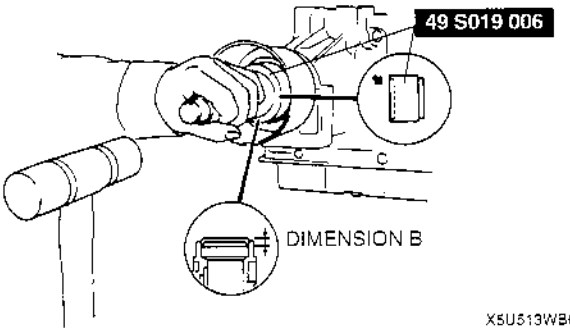

X5U513WBG

9. Install the propeller shaft. (Refer to 03–15 PROPELLER SHAFT REMOVAL/INSTALLATION.)
10. Install the exhaust pipe. (Refer to 01–15 EXHAUST SYSTEM REMOVAL/INSTALLATION.)
11. Add ATF to the specified level. (Refer to 05–13 AUTOMATIC TRANSMISSION FLUID (ATF) REPLACEMENT, ATF Level Inspection.)
12. Carry out the line pressure test. (Refer to 05–13 MECHANICAL TEST, Line Pressure Test.)
13. Carry out the road test. (Refer to 05–13 ROAD TEST.)

CONTROL VALVE BODY REMOVAL/INSTALLATION

X5U513W22

On-Vehicle Removal

1. Clean the transmission exterior thoroughly with a steam cleaner or cleaning solvents.
2. Disconnect the negative battery cable.
3. Drain the ATF. (Refer to 05–13 AUTOMATIC TRANSMISSION FLUID (ATF) REPLACEMENT.)
4. Remove the oil pan and gasket.

Caution

- **To prevent deformation of the tube, remove the tube by pulling both ends up.**

5. Remove the tube.

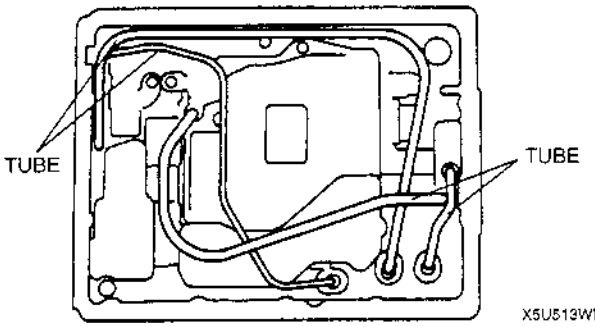

X5U513WBH

6. Disconnect shift solenoid A, B, and torque converter clutch solenoid valve connector.
7. Remove the oil strainer.

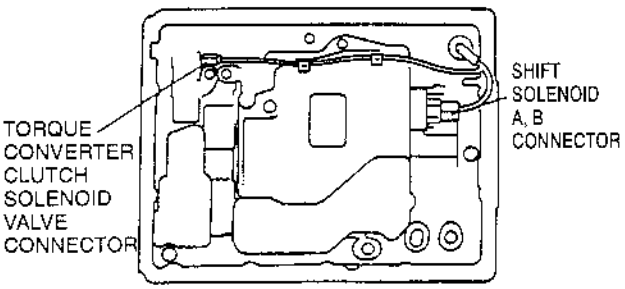

X5U513WBJ

8. Remove the control valve body installation bolts.

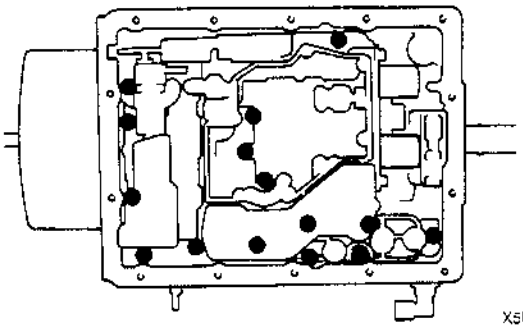

X5U513WA9

9. Remove the nipple of the throttle cable from the throttle cam.

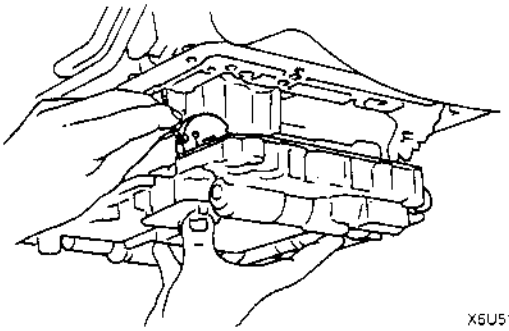

X5U513WBL

10. Remove the control valve body.
11. Remove the accumulator spring.

On-Vehicle Installation

1. Set the accumulator springs into the control valve body as shown.
2. Install the nipple of the throttle cable to the throttle cam.

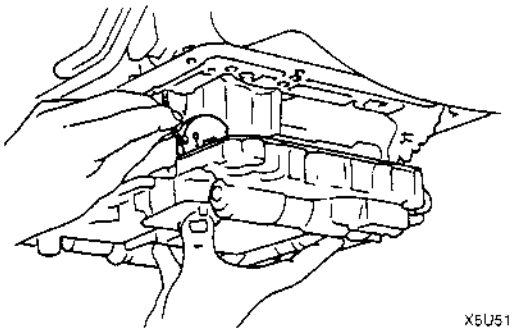

X5U513WBN

3. Verify that the manual valve and manual shaft are assembled correctly.

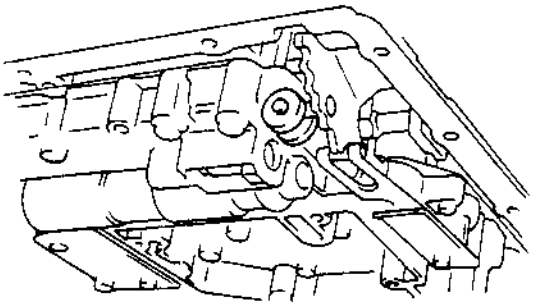

X5U513WBP

4. Install the control valve body.

Tightening torque
7. 9—11.7 N·m
{80—120 kgf·cm, 70—104 in·lbf}

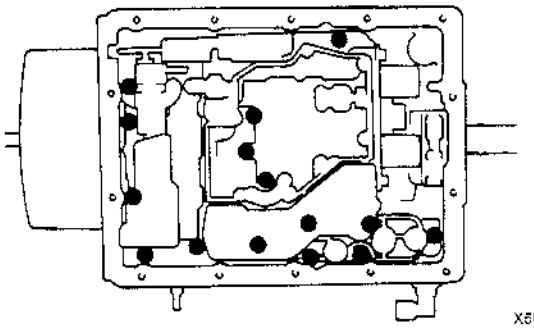

X5U513WA9

5. Install the oil strainer.

Tightening torque
5.0—5.8 N·m {50—60 kgf·cm, 44—52 in·lbf}

6. Connect shift solenoid A, B, and torque converter clutch solenoid valve connector.

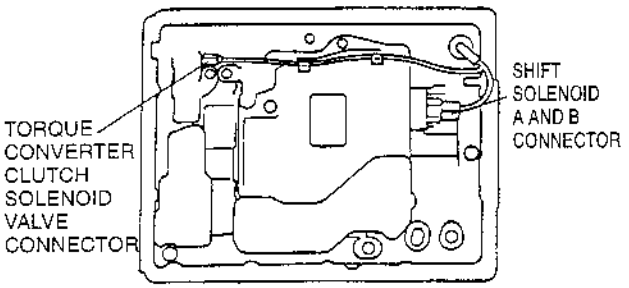

X5U513WBR

7. Install the tube.
8. Install the new gasket and oil pan.

Tightening torque
4.0—4.9 N·m {40—50 kgf·cm, 35—43 in·lbf}

9. Add ATF to the specified level. (Refer to 05–13 AUTOMATIC TRANSMISSION FLUID (ATF) REPLACEMENT.)
10. Carry out the mechanical test. (Refer to 05–13 MECHANICAL SYSTEM TEST.)
11. Carry out the road test. (Refer to 05–13 ROAD TEST.)

TORQUE CONVERTER REMOVAL/INSTALLATION

X5U513W23

1. Remove the transmission. (Refer to 05–13 AUTOMATIC TRANSMISSION REMOVAL/INSTALLATION.)

Caution
- **The oil seal is easily damaged by the sharp edges of the torque converter splines. Do not let the splines contact the oil seal.**

2. Remove the torque converter, and immediately turn it so that the hole faces upward. This will help to keep any remaining fluid from spilling.
3. Drain any ATF remaining in the torque converter.
4. Pour in solvent (approx. 0.50 L {0.53 Us qt, 0.44 Imp qt}).
5. Shake the torque converter to clean the inside. Pour out the solvent.
6. Install the torque converter in the converter housing while rotating it to align the splines.
7. To ensure that the torque converter is installed accurately, measure distance A between the end of the torque converter and the end of the converter housing.

Distance A
22.7 mm {0.894 in}

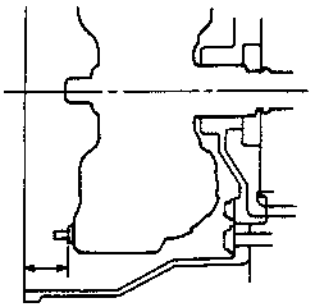

X5U513WBS

8. Install the transmission. (Refer to 05–13 AUTOMATIC TRANSMISSION REMOVAL/INSTALLATION.)

OIL COOLER REMOVAL/INSTALLATION

X5U5*3W25

1. Disconnect the negative battery cable.
2. Drain the ATF. (Refer to 05–13 AUTOMATIC TRANSMISSION FLUID (ATF) REPLACEMENT.)
3. Remove in the order indicated in the table.
4. Install in the reverse order of removal.
5. Add ATF to the specified level. (Refer to 05–13 AUTOMATIC TRANSMISSION FLUID (ATF) REPLACEMENT.)
6. Connect the negative battery cable.
7. Inspect for oil leakage from the oil pipes and oil hoses.
8. Inspect the ATF level and condition. (Refer to 05–13 AUTOMATIC TRANSMISSION FLUID (ATF) INSPECTION, ATF Level Inspection.)
9. Carry out the mechanical system test. (Refer to 05–13 MECHANICAL SYSTEM TEST.)
10. Carry out the road test. (Refer to 05–13 ROAD TEST.)

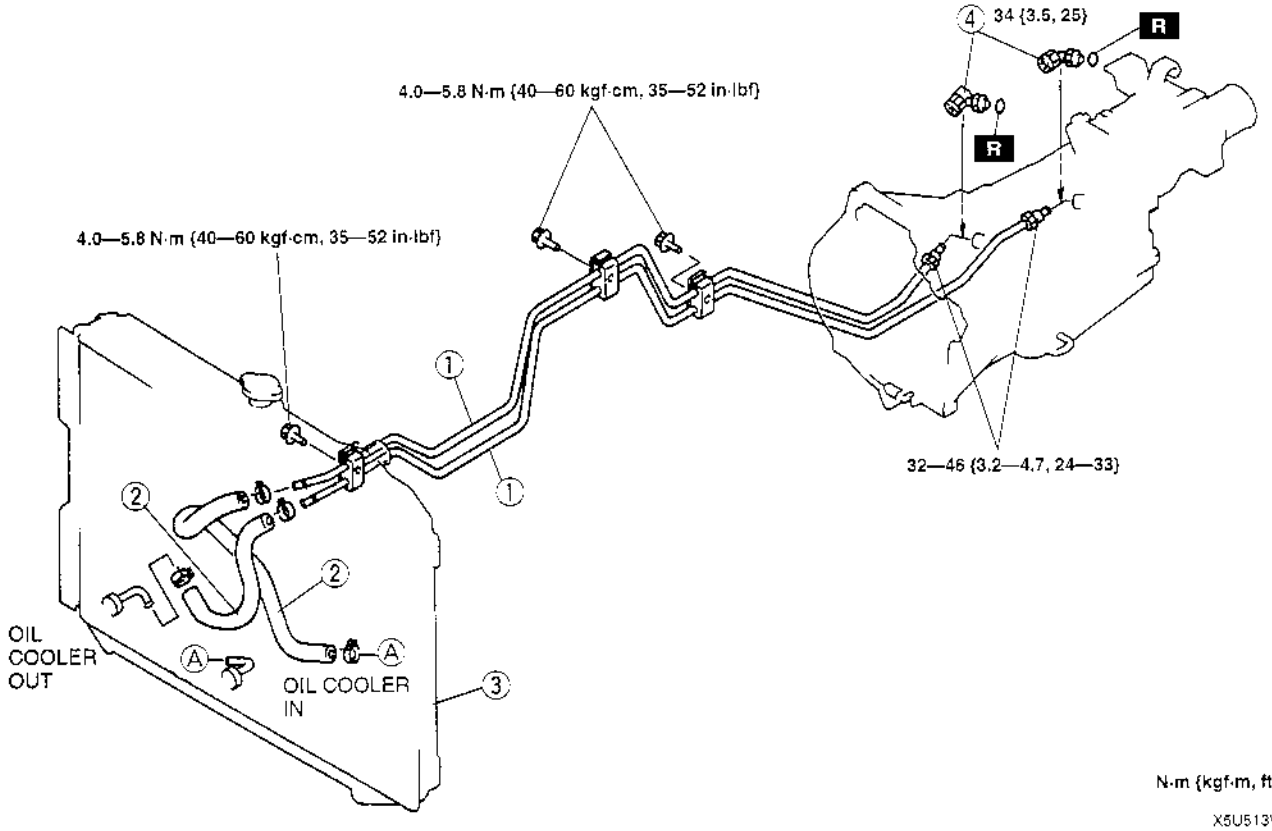

X5U513WBU

1	Oil pipe
2	Oil hose

3	Radiator (in tank oil cooler) ☞ Installation Note
4	Elbow ☞ Installation Note

Elbow Installation Note

1. Apply ATF to the O-ring, then install it to the elbow.
2. Install the elbows in the angle shown in the figure, then tighten the nut.

Tightening torque
34 N·m {3.5 kgf·m, 25 ft·lbf}

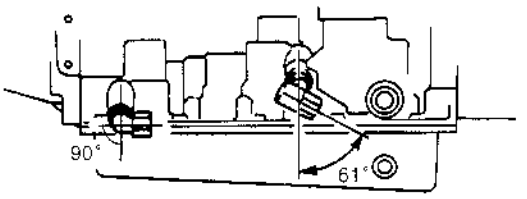

X5U5*3WBV

Radiator (In Tank Oil Cooler) Installation Note

1. The automatic transmission oil cooler flushing must be performed whenever a transmission is removed for service to remove existing fluid which may be contaminated to prevent contamination of new fluid. The flushing must be performed after installation of the overhauled or replaced transmission.
2. Follow the instruction in the manufacturers publication for flushing operation.

Oil Hose Installation Note

Caution

- **In order to prevent ATF leakage, replace the hose when any damage is found inside or outside of the hose, especially on areas contacting with pipes.**

1. Apply compressed air to cooler-side opening, and blow any remaining dust and foreign material from the cooler pipes. Compressed air should be applied for no less than one minute.

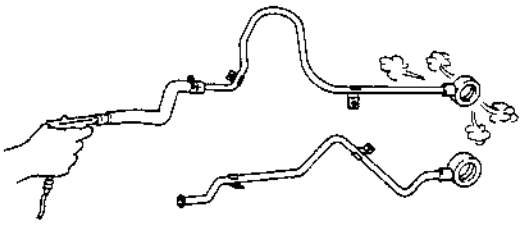

X5U513WBW

2. Align the marks, and slide the oil cooler hose onto the oil cooler pipe until it is fully seated as shown.

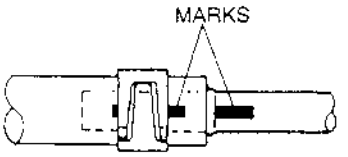

X5U513WBX

3. Install the hose clamp onto the hose. If reusing the hose, install the new hose clamp exactly onto the mark left by the previous hose clamp.

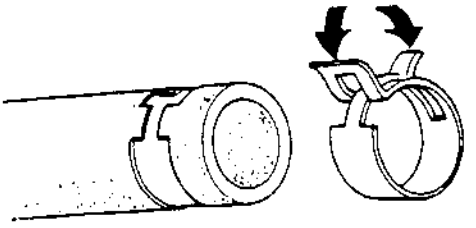

X5U513WBY

4. Verify that the hose clamp does not interfere with any other parts.

DRIVE PLATE REMOVAL/INSTALLATION

1. Remove in the order indicated in the table.
2. Install in the reverse order of removal.

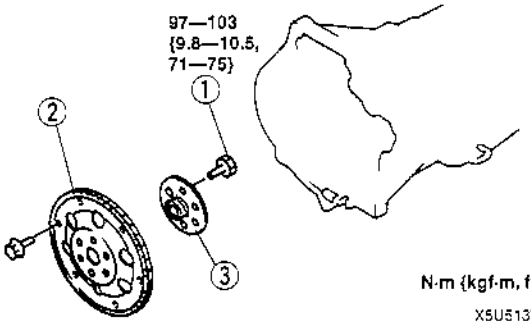

X5U513WBZ

1	Drive plate mounting bolts ☞ Removal Note ☞ Installation Note
2	Drive plate
3	Adapter

X5U513W26

Drive Plate Mounting Bolts Removal Note

1. Set the **SST** against the drive plate.

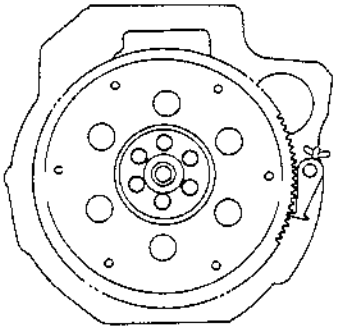

X5U513WC0

2. Remove the bolts and the drive plate.

Drive Plate Mounting Bolts Installation Note

1. Set the **SST** against the drive plate.

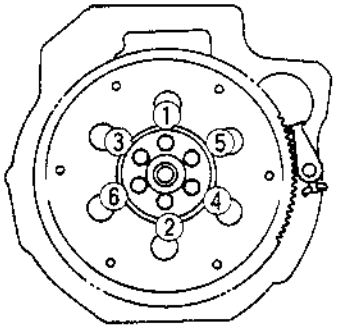

X5U513WC1

2. Tighten the drive plate mounting bolts gradually in the order shown.

Tightening torque
97—103 N·m {9.8—10.5 kgf·m, 71—75 ft·lbf}

05–14 AUTOMATIC TRANSMISSION SHIFT MECHANISM

EMERGENCY OVERRIDE BUTTON INSPECTION

1. Verify that the selector lever is locked in P position.
2. Remove the indicator panel cover by using a screwdriver.
3. Insert the screwdriver into the emergency override hole, push down, and verify that the selector lever can be shifted from P position.
4. If not as specified, inspect or replace the shift-lock actuator.

X5U514W01

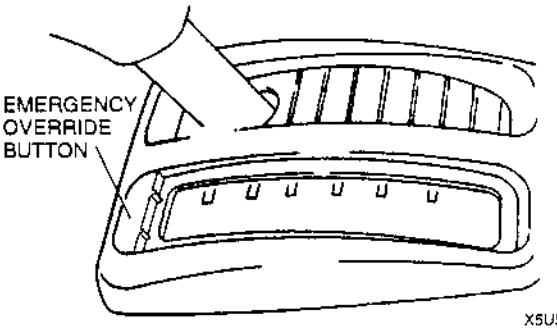

X5U514WA0

KEY INTERLOCK SOLENOID INSPECTION

X5U514W02

1. Disconnect the negative battery cable.
2. Remove the column cover.
3. Disconnect the key interlock solenoid connector.
4. Insert the ignition key in the key cylinder.
5. Apply battery positive voltage between terminals B and C, and verify that the solenoid operates.
6. If not as specified, replace the key interlock solenoid.
7. Connect the negative battery cable.

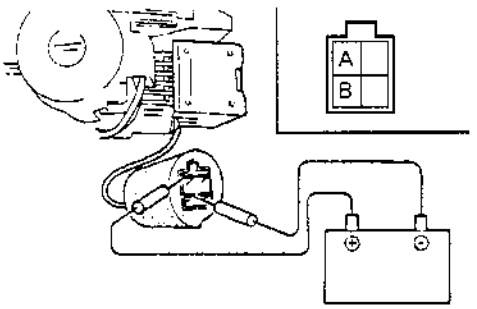

X5U514WA1

KEY INTERLOCK SOLENOID REMOVAL/INSTALLATION

X5U514W03

1. Disconnect the negative battery cable.
2. Remove the column cover.
3. Disconnect the key interlock solenoid connector.
4. Remove the screws and the key interlock solenoid.
5. Install the key interlock solenoid and tighten the screws.

Tightening torque
6.9—12.7 N·m
{70—130 kgf·cm, 61—112 in·lbf}

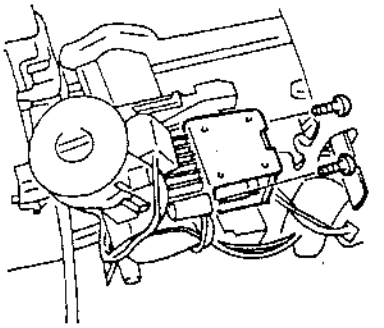

U5U51403

6. Verify that the key interlock solenoid operates.
7. Connect the key interlock solenoid connector.
8. Install the column cover.
9. Connect the negative battery cable.

KEY INTERLOCK UNIT INSPECTION

X5U514W04

1. Remove the column cover.
2. Turn the ignition switch to ON, and inspect terminal voltages, referring to the chart below.

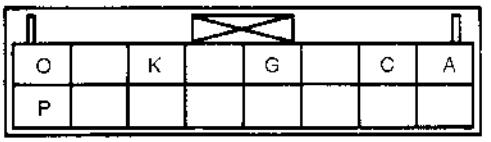

X5U514WA2

Terminal	(–) terminal connected to	Condition	Correct measurement value
A	G	For less than 2 seconds after P position switch is on, and ignition switch is turned to ACC or on.	0
		Except above conditions	B+
C	G	P position switch is on, and ignition switch is turned to ACC or ON.	0
		Except above condition	B+
G	Ground	Constant	0
K	G	P position switch is on.	0
		P position switch is off.	B+
O	G	Ignition switch is at ON.	B+
		Ignition switch is off.	0
P	G	Ignition switch is at ACC.	B+
		Ignition switch is at position other than ACC.	0

3. If not as specified, repair the wiring harness and/or key interlock unit.

KEY INTERLOCK UNIT REMOVAL/INSTALLATION

X5U514W05

1. Disconnect the negative battery cable.
2. Disconnect the key interlock unit connector.
3. Remove the key interlock unit.
4. Install the new key interlock unit.
5. Connect the key interlock unit connector.
6. Connect the negative battery cable.

P POSITION SWITCH INSPECTION

X5U514W06

1. Disconnect the negative battery cable.
2. Remove the rear console.
3. Remove the screws and lift up the indicator panel.
4. Disconnect the P position switch connector.

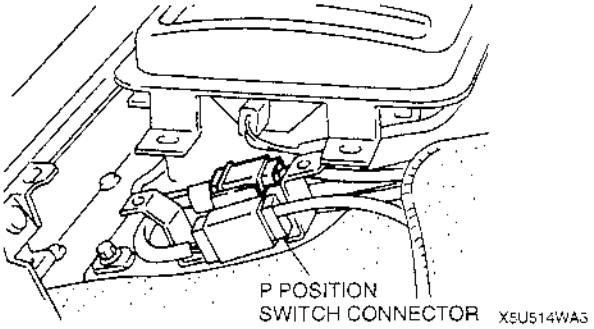

5. Inspect for continuity between the terminals.

Position/ Range	Selector lever release button	Continuity
P	Released	Yes
	Depressed	No
R, N, D, 2, 1	—	No

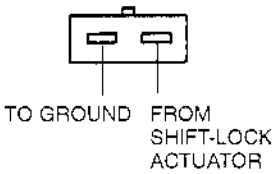

U5U514W6

6. If not as specified, replace the P position switch.
7. Connect the P position switch connector.
8. Adjust the indicator panel. Install the screws in the order shown in the figure.

Tightening torque
2.0—2.9 N·m {20—30 kgf·cm, 18—26 in·lbf}

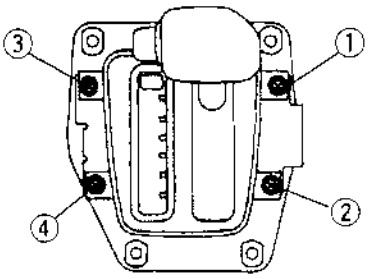

X5U514WA4

9. Install the rear console.
10. Connect the negative battery cable.

SHIFT-LOCK ACTUATOR INSPECTION

X5U514W07

1. Remove the rear console.
2. Remove the selector lever knob and indicator panel screws.
3. Lift up slightly the selector lever, selector sleeve, and indicator panel, and disconnect the O/D OFF switch connector.
4. Shift the selector lever to P position.

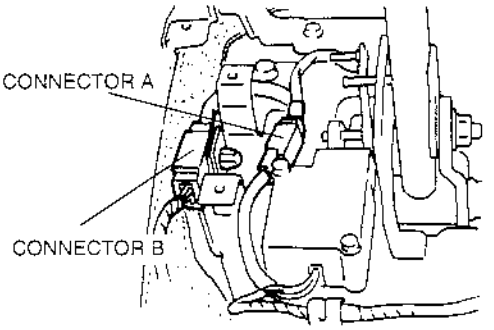

X5U514WA5

5. Turn the ignition switch to ON, and inspect for terminal voltages and continuity, referring to the chart below. Disconnect the shift-lock actuator connector to inspect for continuity between terminal C (harness side) and ground.

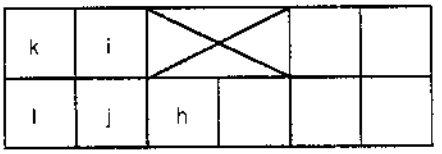

X5U514WAE

Terminal	(–) terminal connected to	Condition	Correct measurement value
h	l	Ignition switch is off	B+
i	l	Ignition switch is at ON	B+
j	l	Brake pedal is released → depressed	0 V → B+
k	l	P position, selector lever release button is depressed	0 V
l (harness side)	Body	Constant	0 Ω

6. If not as specified, repair the wiring harness and/or shift-lock actuator.
7. Grasp the O/D OFF switch wiring harness and pull it while pushing the selector lever knob down fully onto the selector lever.
8. Connect the O/D OFF switch connector.
9. Adjust the indicator panel. Install the screws in the order shown in the figure.

Tightening torque
2.0—2.9 N·m {20—30 kgf·cm, 18—26 in·lbf}

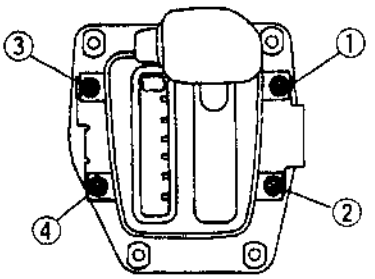

X5U514WA6

10. Apply locking compound to the selector lever knob screw threads after the threads have been cleaned. Tighten the screws.

Tightening torque
2.0—2.9 N·m {20—30 kgf·cm, 18—26 in·lbf}

11. Install the rear console.
12. Verify correct operation of the shift-lock system.

SHIFT-LOCK ACTUATOR REMOVAL/INSTALLATION

X5U514W08

1. Disconnect the negative battery cable.
2. Remove the rear console.
3. Remove the indicator screws and lift up the indicator panel.
4. Disconnect the shift-lock actuator connector.
5. Disconnect the P position switch connector.
6. Remove the shift-lock actuator.
7. Install a shift-lock actuator.

   Tightening torque
   0.7—1.2 N·m {7—13 kgf·cm, 6.1—11.2 in·lbf}

8. Connect the P position switch connector.
9. Connect the shift-lock actuator connector.
10. Install and adjust the indicator panel.

    Tightening torque
    2.0—2.9 N·m {20—30 kgf·cm, 18—26 in·lbf}

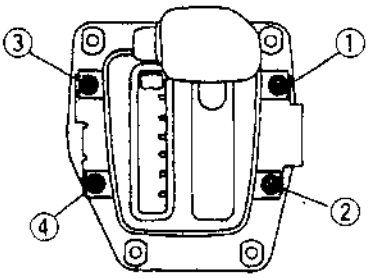

X5U514WA7

11. Install the rear console.
12. Verify correct operation of the shift-lock system.
13. Connect the negative battery cable.

SELECTOR LEVER INSPECTION

X5U514W09

1. Verify that the selector lever can be shifted only as shown in the figure.
2. Make sure there is a click at each range when shifted from P position ⇔ 1 range.
3. Verify that the positions of the selector lever and the indicator are aligned.
4. Verify that the selector lever moves smoothly.
5. If not correct, adjust or repair the selector lever.

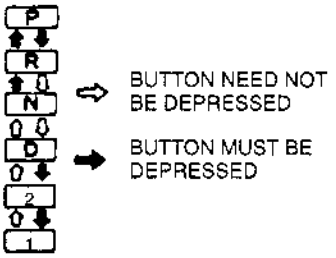

X5U514WA8

SELECTOR LEVER ADJUSTMENT

X5U514W10

Lever Position Adjustment

1. Remove the rear console, selector lever knob, selector sleeve, and indicator panel.
2. Loosen the locknut.
3. Shift the transmission to P position by pushing the adjustment lever forward.

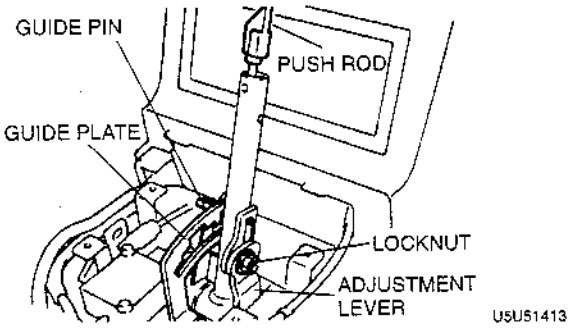

4. Adjust the lever so that the clearance between the guide plate and the guide pin in P position with the push rod lightly depressed is as shown.
5. Tighten the locknut.

Tightening torque
19—28 N·m {2.0—2.9 kgf·m, 15—20 ft·lbf}

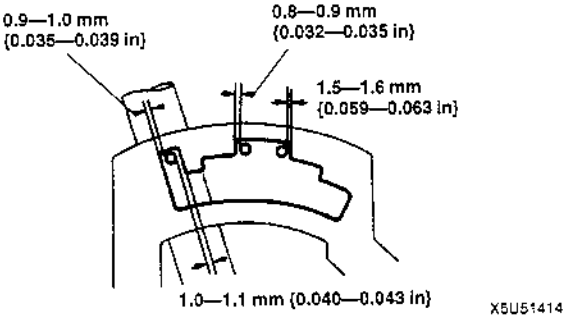

6. Move the selector lever to N position and D range and verify that there is the same clearance between the guide plate and guide pin.

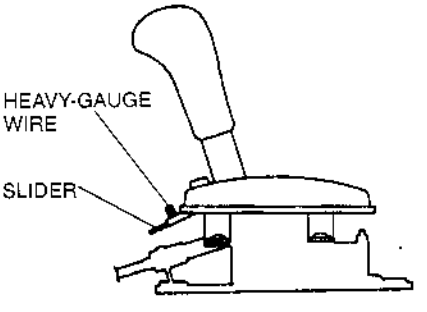

7. If not as specified, readjust the lever.
8. Install the indicator panel, selector sleeve, selector lever knob, and rear console in the reverse order of removal.

Indicator Panel Adjustment

1. Shift the selector lever to P position.
2. Loosen the indicator screws.
3. Align the alignment hole in the slider with the hole in the indicator panel. Install suitable heavy-gauge wire to hole the slider.
4. Tighten the indicator mounting screws in the order shown in the figure.

Tightening torque
2.0—2.9 N·m {20—30 kgf·cm, 18—26 in·lbf}

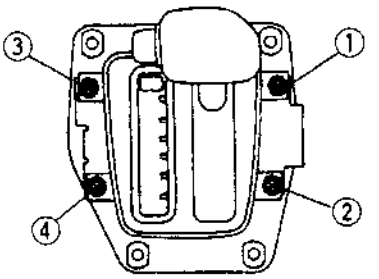

5. Remove the wire from the slider.
6. Verify that the selector lever properly aligns with the indicator in each range.
7. Verify correct operation of the emergency override button.

SELECTOR LEVER REMOVAL/INSTALLATION

X5U514W11

1. Disconnect the negative battery cable.
2. Remove in the order indicated in the table.
3. Install in the reverse order of removal.

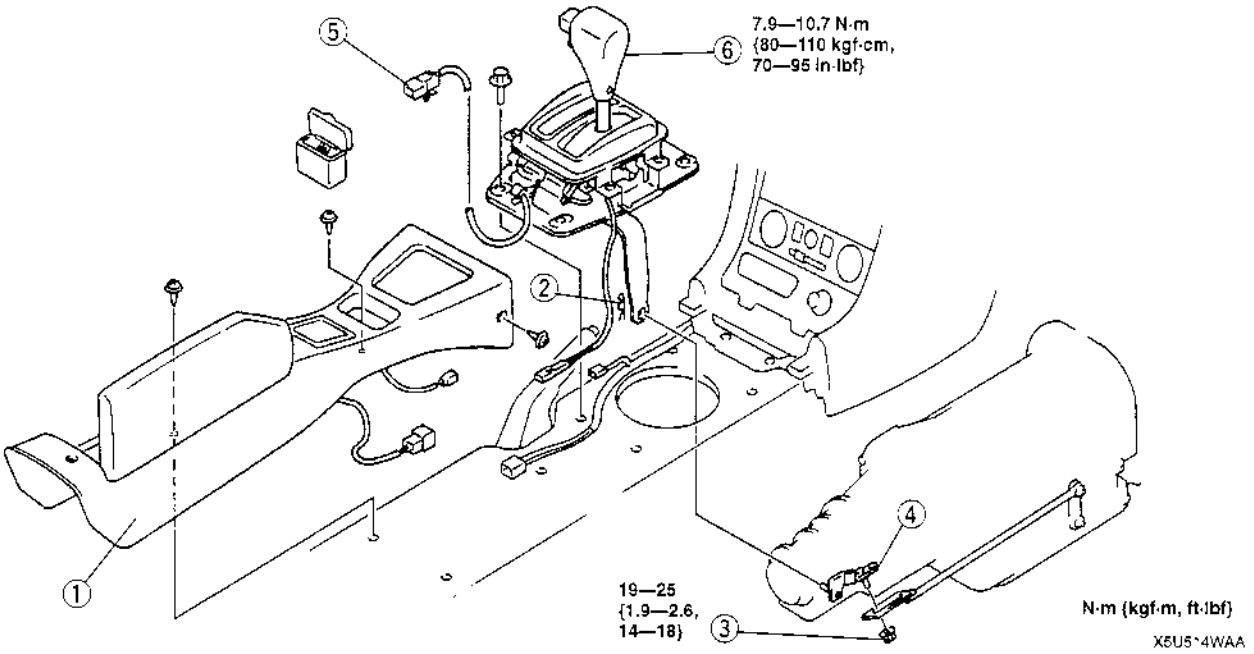

1	Rear console
2	Spring pin ☞ Installation Note
3	Nut
4	Bracket
5	Shift-lock actuator connector
6	Selector lever

Spring Pin Installation Note

1. On level ground, jack up the vehicle and support it evenly on safety stands.
2. Install a new spring pin forward as shown in the figure.

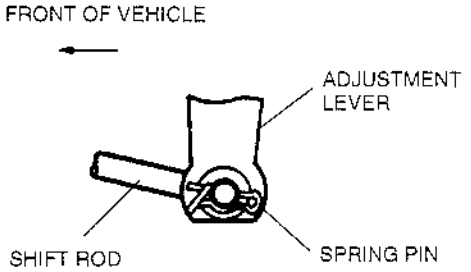

U5U51419

SELECTOR LEVER DISASSEMBLY/ASSEMBLY

X5U514W12

1. Disassemble in the order indicated in the table.
2. Assemble in the reverse order of disassembly.

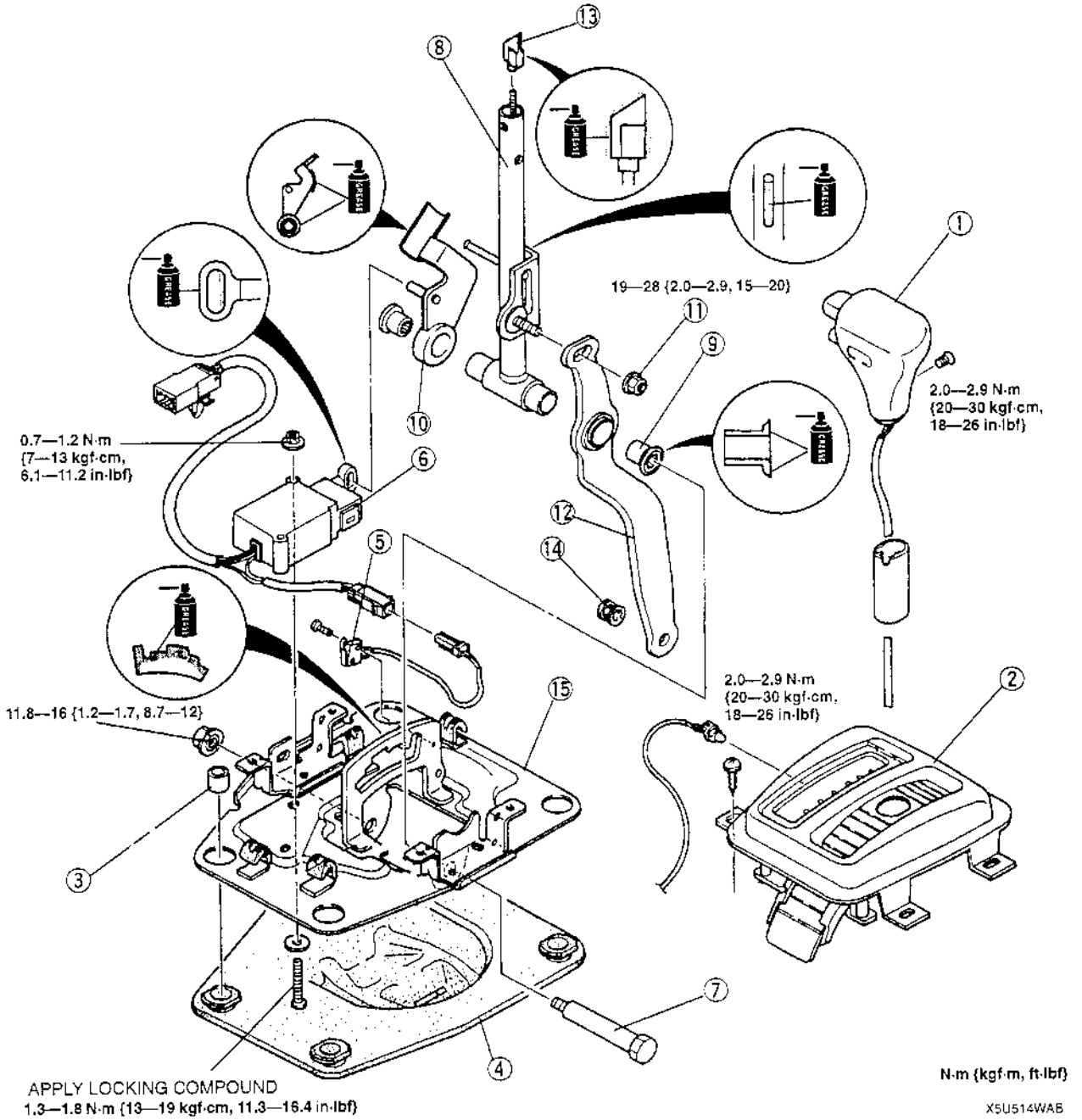

1	Selector lever knob
2	Indicator panel ☞ Assembly Note
3	Spacer
4	Boot
5	P position switch
6	Shift-lock actuator
7	Spindle
8	Push rod component

9	Bushing
10	Lock lever
11	Locknut
12	Adjustment lever
13	Cam ☞ Assembly Note
14	Bushing
15	Selector lever bracket

Cam Assembly Note

1. Temporarily install the cam to the push rod.

U5U51421

Note

- The clearance becomes smaller by turning the cam clockwise.

2. Adjust the clearance between the guide plate and the guide pin by turning the cam.

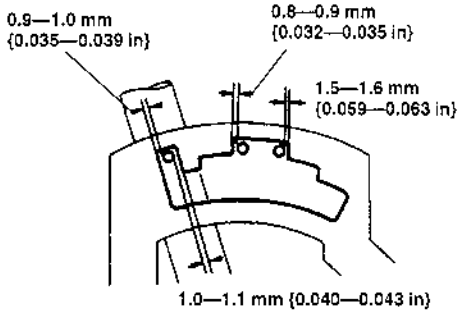

U5U51422

3. Install the selector lever knob and verify that the clearance is as specified.
4. If necessary, repeat from step 2.

Indicator Panel Assembly Note

1. Set the selector sleeve over the selector lever.
2. Grasp the O/D OFF switch wiring harness and pull it while pushing the selector lever knob down fully on the selector lever.
3. Connector the O/D OFF switch connector.
4. Shift the selector lever to P position.
5. Align the alignment hole in the slider with the hole in the indicator panel. Install suitable heavy-gauge wire to hold the slider.

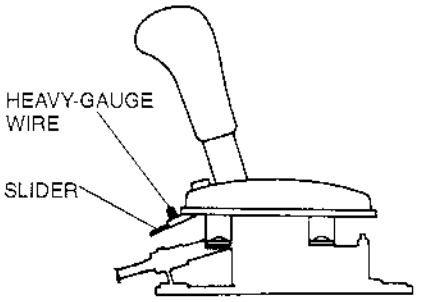

X5U514WAD

6. Tighten the indicator mounting screws in the order shown in the figure.

Tightening torque
2.0—2.9 N·m {20—30 kgf·cm, 18—26 in·lbf}

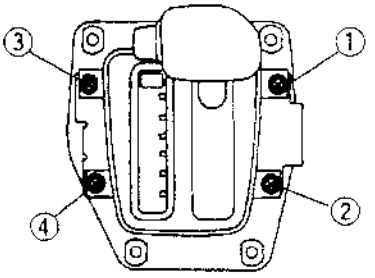

X5U514WAC

7. Remove the wire from the slider.
8. Verify that the selector lever properly aligns with the indicator in each range.
9. Verify correct operation of the emergency override button.

05–50 TECHNICAL DATA

05 TRANSMISSION/TRANSAXLE

U5U550AA

Item				Engine
				BP
CLUTCH				
Clutch pedal	Height (with carpet)		(mm {in})	175—180 {6.89—7.09}
	Free play		(mm {in})	0.6—3.1 {0.02—0.12}
	Total free play		(mm {in})	5—13 {0.20—0.51}
	Disengagement height (with carpet)		(mm {in})	68 {2.68}
Clutch disc	Minimum thickness		(mm {in})	0.3 {0.012}
	Maximum runout		(mm {in})	0.7 {0.028}
Flywheel	Maximum runout		(mm {in})	0.2 {0.008}
Clutch fluid				SAE J1703, FMVSS116 DOT-3
MANUAL TRANSMISSION				
Transmission type				**M15M-D**
Oil	Grade			API Service GL-4 or GL-5
	Viscosity	All-season		SAE 75W–90
		Above 10 °C {50 °F}		SAE 80W–90
	Capacity		(L {US qt, Imp qt})	2.0 {2.1, 1.8}
AUTOMATIC TRANSMISSION				
Transmission type				**SB4A-EL**
Automatic transmission fluid (ATF)	Type			M-III or equivalent (e.g. Dexron®II)
	Capacity		(L {US qt, Imp qt})	6.7 {7.1, 5.9}
Line pressure (kPa {kgf/cm^2, psi})	D, 2, 1	Idle		370—400 {3.7—4.1, 53—58}
		Stall		980—1110 {9.9—11.4, 141—162}
	R	Idle		510—550 {5.1—5.7, 73—81}
		Stall		1250—1490 {12.7—15.2, 181—216}
Engine stall speed (rpm)	D, 2, 1			2,370—2,740
	R			2,370—2,740
Time lag (sec.)	N–D			0.7
	N–R			1.2
Input/turbine speed sensor (Ω)	ATF temperature [20 °C {68 °F}]			560—680
Output speed sensor (Ω)	ATF temperature [20 °C {68 °F}]			387—473
Solenoid valves (Ω)	Shift solenoid A			11—15
	Shift solenoid B			11—15
	TCC			11—15

05–60 SERVICE TOOLS

05 TRANSMISSION/TRANSAXLE

X5U560W01

49 0259 770B Flare nut wrench  T0259770B	49 E011 1A0 Ring gear brake set 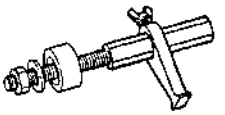 TE0111A0X	49 SE01 310A Clutch disc centering tool 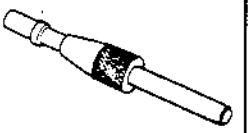 TSE01310A
49 1285 071 Bearing puller  T1285071X	49 0378 400B Oil pressure gauge set  T0378400B	49 HD64 406A Adapter 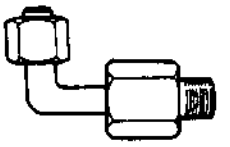 THD64406A
49 B019 901 Oil pressure gauge  TB019901X	49 0877 435 Wrench  T0877435X	49 S019 005 Oil seal remover 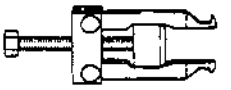 TS019005X
49 S019 006 Oil seal installer 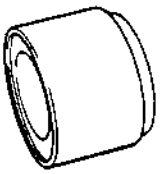 TS019006X	49 B025 0A0 Oil seal installer 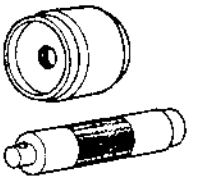 TB0250A0X	—

STEERING

06
SECTION

06

06–10 GENERAL PROCEDURES

PRECAUTION (STEERING)

X5U610W01

Wheels and tires removal/installation

- The removal and installation procedures for the wheels and tires are not mentioned in this section. When a wheel is removed, retighten it to **89—117 N·m {9.0—12.0 kgf·m, 66—86 ft·lbf}**.

Power steering components removal/installation

- If any power steering fluid line has been disconnected anytime during the procedure, add ATF M-III or equivalent (e.g. Dexron®II), bleed the fluid line, and inspect for leakage after the procedure has been completed.

Connectors disconnection/connection

- Obtain the code number and deactivate the audio antitheft system before disconnecting the battery.
- Disconnect the negative battery cable before doing any work that requires handling of connectors. Reconnect the negative battery cable only after the work is completed.

06–11 MANUAL STEERING

06

STEERING WHEEL AND COLUMN INSPECTION

X5U611W01

Steering Wheel Play Inspection

- If the play exceeds specification, either the steering joints are worn or the backlash of the steering gear is excessive. With the wheels in the straight-ahead position, gently turn the steering wheel to the left and right and verify that the play is within specification.

  Play
  0—30 mm {0—1.18 in}

Steering Wheel Looseness Inspection

- Move the steering wheel as shown in the figure to inspect for column bearing wear, steering shaft joint play, steering wheel looseness, and column looseness.

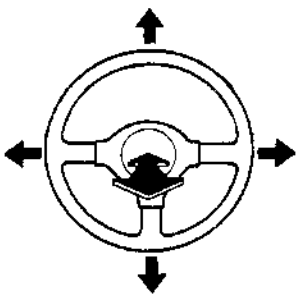

X5U611WA9

Steering Wheel Effort Inspection

1. On level ground, jack up the front of the vehicle and support it on safety stands.
2. Turn the steering wheel fully to the left and right at least 5 times.
3. Move the steering wheel to put the wheels in the straight ahead position.
4. Attach a pull scale to the outermost point of the steering wheel spoke. Then, starting with the wheels in the straight-ahead position, measure the effort required to turn the steering wheel to the left and to the right.

   Steering wheel effort
   5—29 N {0.5—3.0 kgf, 1.1—6.6 lbf} (during one turn of steering wheel)

5. If not as specified, inspect the following: rotation starting torque of pinion, rotation torque of each ball joint, and steering joints.

STEERING WHEEL AND COLUMN REMOVAL/INSTALLATION

X5U611W02

1. Remove in the order indicated in the table.
2. Install in the reverse order of removal.
3. After installation, verify that the horn sounds. If the horn does not sound, remove the air bag module and connect the module connectors.

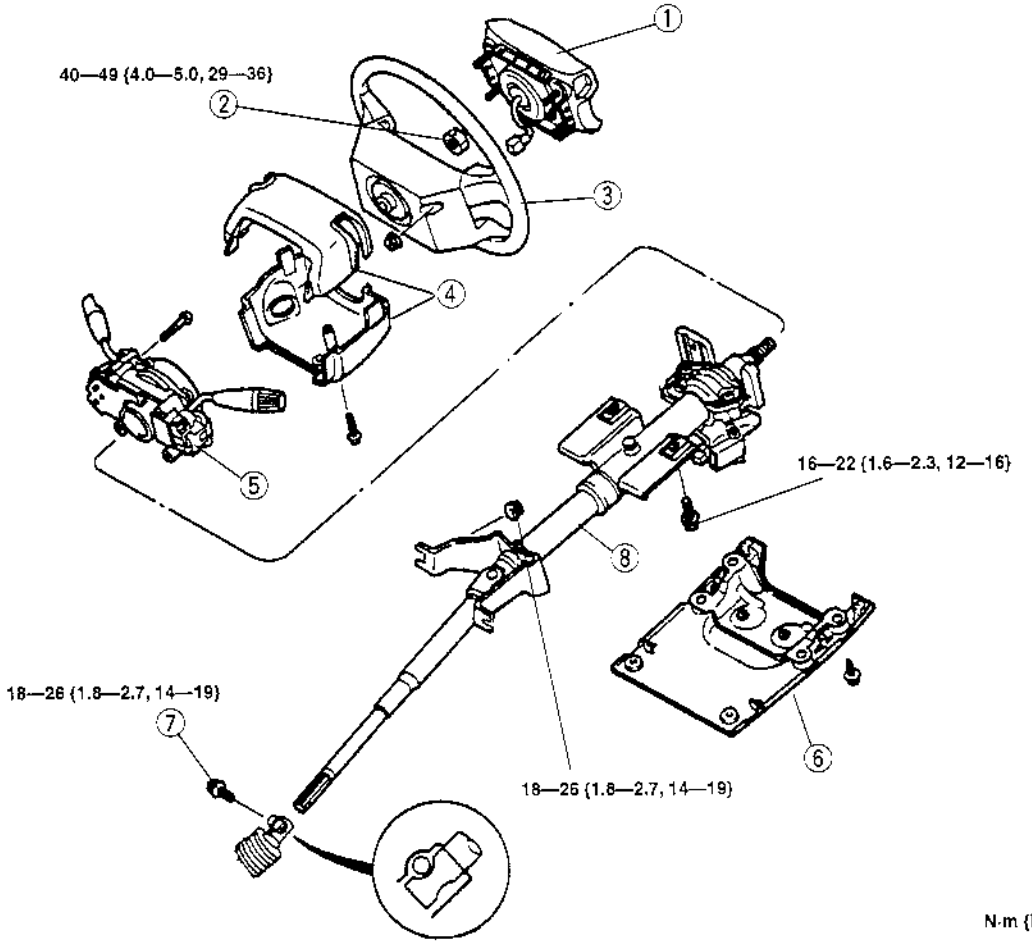

X5U611WA6

1	Air bag module ☞ 08–10 DRIVER-SIDE AIR BAG MODULE REMOVAL/INSTALLATION
2	Locknut
3	Steering wheel ☞ Removal Note
4	Column cover
5	Combination switch
6	Lower panel
7	Intermediate shaft bolt
8	Steering shaft

Steering Wheel Removal Note

Caution

- **Do not try to remove the steering wheel by hitting the shaft with a hammer. The column will collapse.**
- Set the wheels in the straight-ahead position, remove the steering wheel by using a suitable puller.

STEERING SHAFT DISASSEMBLY/ASSEMBLY

X5U611W03

1. Disassemble in the order indicated in the tbale.
2. Assemble in the reverse order of disassembly.

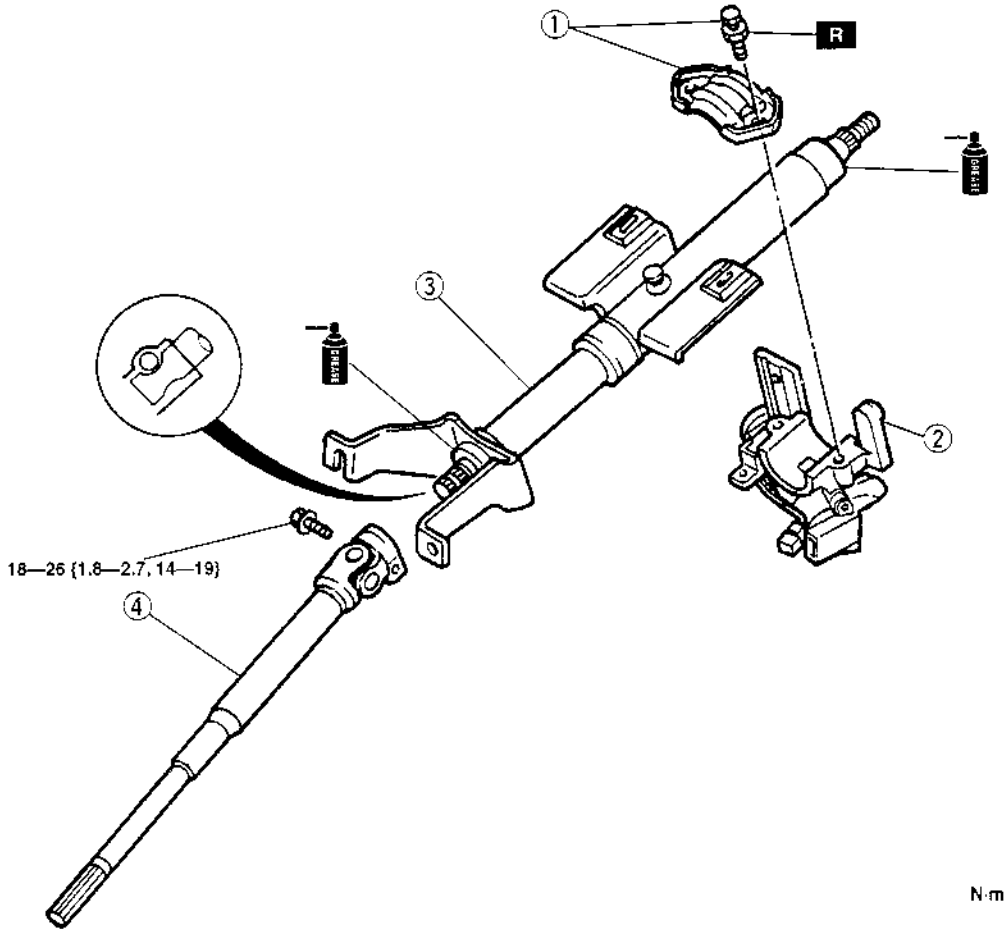

N·m {kgf·m, ft·lbf}

X5U611WA7

1	Steering lock mounting bolts and bracket ☞ Disassembly Note ☞ Assembly Note
2	Steering lock component
3	Steering shaft
4	Intermediate shaft

Steering Lock Mounting Bolts and Bracket Disassembly Note

- Use a chisel to make a groove in the heads of the steering lock mounting bolts. Remove the bolts with a screwdriver. Remove the steering lock component.

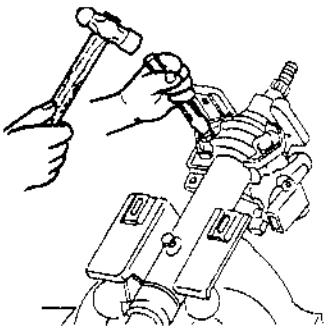

U5U61105

Steering Lock Mounting Bolts and Bracket Assembly Note

- Install the steering lock component. Install the new steering lock mounting bolts. Tighten the bolts until the heads break off.

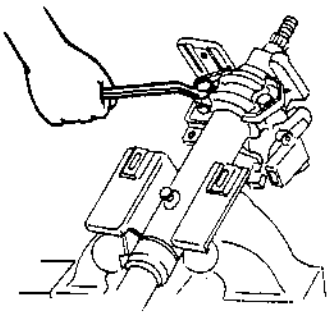

U5U61106

STEERING SHAFT INSPECTION

X5U611W04

- Inspect the following, and replace the column component as necessary.

1. Column bearing damage.

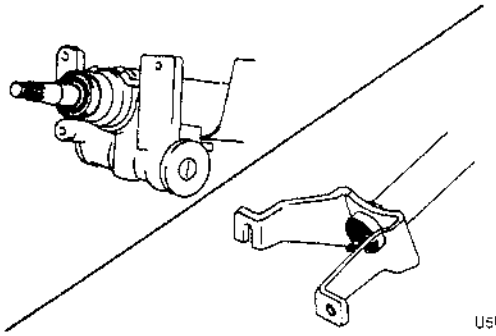

U5U61107

2. Steering shaft length.

Length
593.8—595.8 mm {23.38—23.45 in}

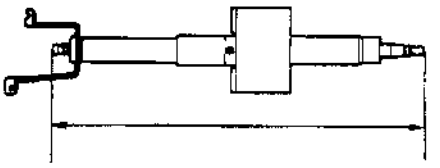

U5U61108

STEERING GEAR AND LINKAGE REMOVAL/INSTALLATION

X5U611W05

Caution

- **Performing the following procedures without first removing the ABS wheel-speed sensor may possibly cause an open circuit in the harness if it is pulled by mistake. Before performing the following procedures, remove the ABS wheel-speed sensor (axle side) and fix it to an appropriate place where the sensor will not be pulled by mistake while servicing the vehicle.**

1. With the wheels in the straight-ahead position, remove in the order indicated in the table.
2. Install in the reverse order of removal.
3. Adjust the total toe-in.

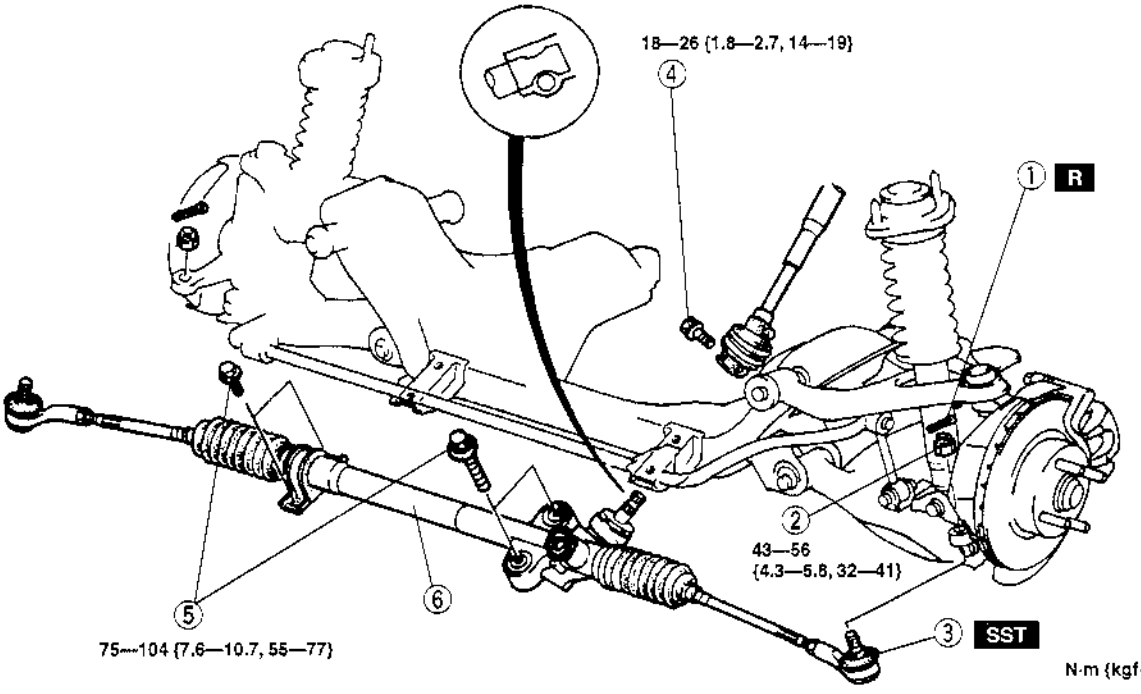

X5U611WA1

1	Cotter pin
2	Nut
3	Tie-rod end ball joint ☞ Removal Note

4	Intermediate shaft bolt
5	Mounting bracket bolt
6	Steering gear and linkage

Tie-rod End Ball Joint Removal Note

- Separate the tie-rod end ball joint from the knuckle by using the **SST**.

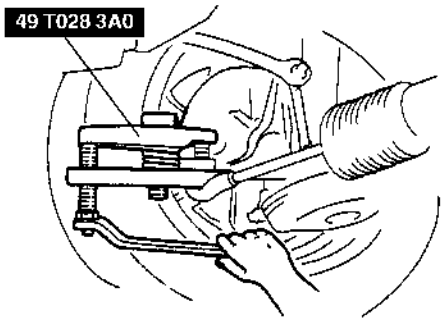

U5U61110

STEERING GEAR AND LINKAGE DISASSEMBLY/ASSEMBLY

X5U611W06

1. Disassemble in the order indicated in the table.
2. Assemble in the reverse order of disassembly.

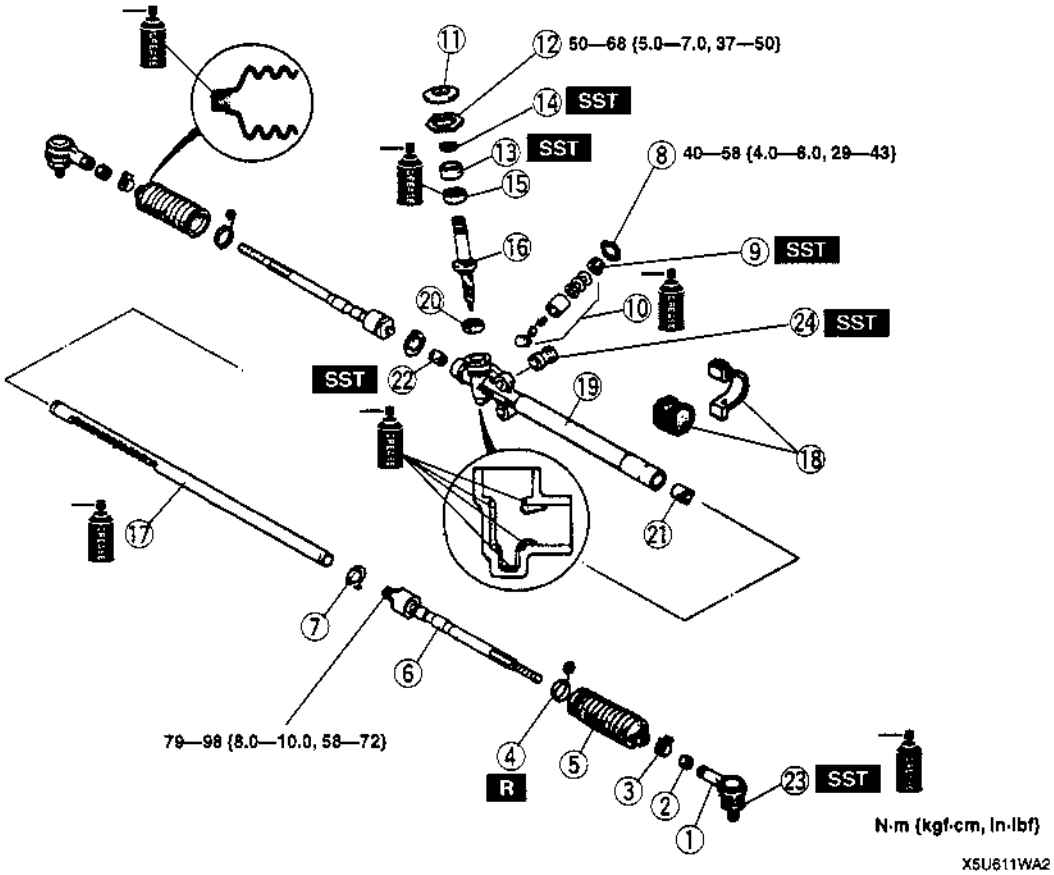

X5U611WA2

1	Tie-rod end
2	Locknut (Tie-rod end)
3	Boot band
4	Boot wire
5	Boot
6	Tie rod ☞ Disassembly Note
7	Washer

8	Locknut (Adjusting cover)
9	Adjusting cover ☞ Disassembly Note ☞ Assembly Note
10	Roller component
11	Dust cover
12	Locknut (Rear cover)

13	Rear cover ☞ Assembly Note
14	Oil seal ☞ Disassembly Note
15	Upper bearing
16	Pinion shaft ☞ Assembly Note
17	Steering rack ☞ Disassembly Note ☞ Assembly Note
18	Mounting bracket and mount
19	Gear housing
20	Lower bearing ☞ Disassembly Note ☞ Assembly Note
21	Rack bushing ☞ Disassembly Note ☞ Assembly Note
22	Bushing ☞ Disassembly Note ☞ Assembly Note
23	Tie-rod end boot ☞ Disassembly Note ☞ Assembly Note
24	Mounting rubber ☞ Disassembly Note ☞ Assembly Note

Tie Rod Disassembly Note

1. Unclamp the washer.
2. Remove the tie rod.

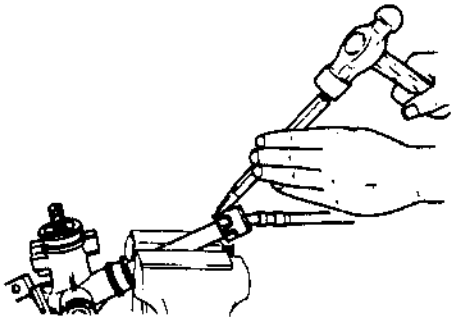

U5U61112

Adjusting Cover Disassembly Note

- Remove the adjusting cover by using the **SST**.

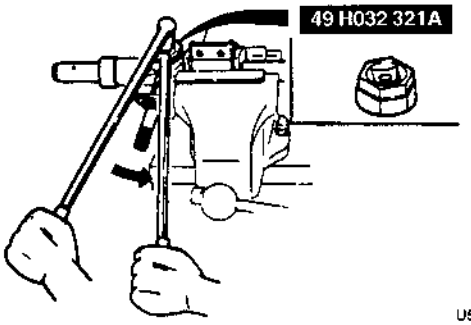

U5U61113

Oil Seal Disassembly Note

- Remove the oil seal by using the **SST**.

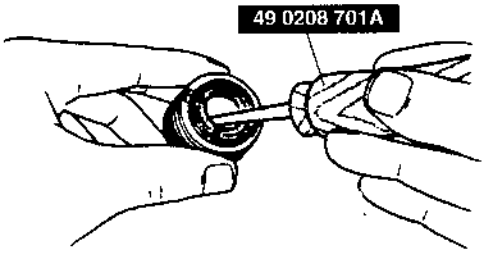

U5U61114

Steering Rack Disassembly Note

Caution

- **Removing the rack from the tube side can damage the rack bushing by dragging the rack teeth across it. When removing the rack, remove it slowly and carefully.**

- Remove the rack from the tube side.

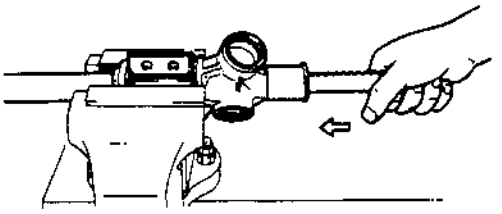

U5U61115

Lower Bearing Disassembly Note

Note

- The lower bearing does not need to be removed unless replacing it.

1. Heat the gear housing in water to about **80 °C {180 °F}**.
2. Tap the end of the housing with a plastic hammer to remove the lower bearing.

Rack Bushing Disassembly Note

Note
- The rack bushing does not need to be removed unless replacing it.

- Depress the locking tab, and carefully remove the rack bushing.

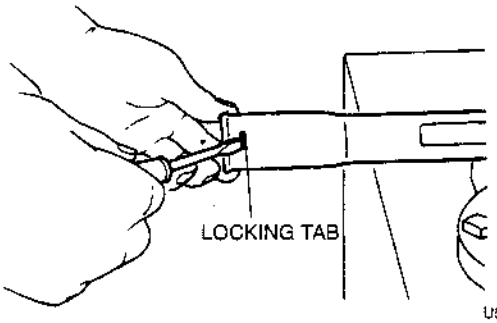

U5U61116

Bushing Disassembly Note

Note
- The bushing does not need to be removed unless replacing it.

- Carefully break the bushing to remove it.

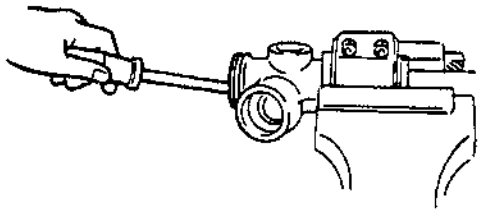

U5U61117

Tie-rod End Boot Disassembly Note

1. Secure the tie-rod end in a vise.
2. Place a chisel against the boot and hold it at the angle shown.
3. Remove the boot by tapping it with a hammer.

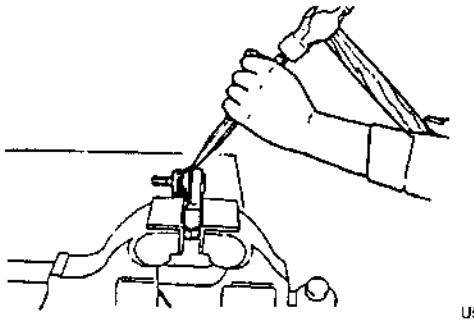

U5U61118

Mounting Rubber Disassembly Note

- Press the mounting rubber out from the gear housing by using the **SSTs** and a press.

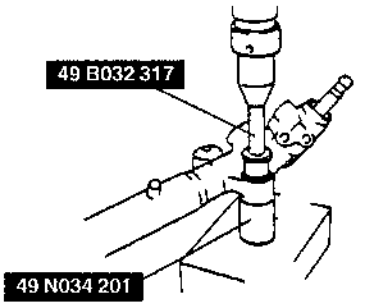

X5U611WA3

Mounting Rubber Assembly Note

1. Apply soapy water to the rubber part of the mounting rubber.
2. Press the mounting rubber until the mounting rubber end comes out completely from the gear housing by using the **SSTs** and a press.

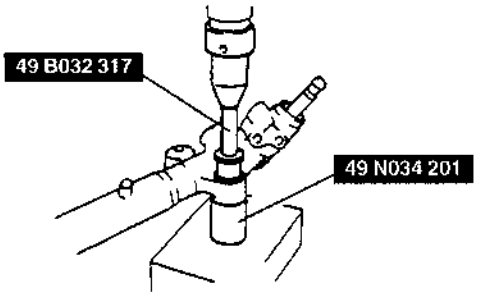

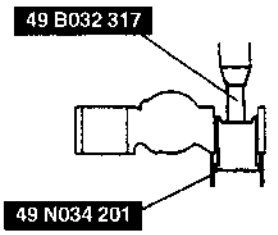

X5U611WA4

3. Reverse the gear housing, then press the mounting rubber until the mounting rubber end comes out completely from the other side. At this time, mounting rubber end and steel pipe are aligned.

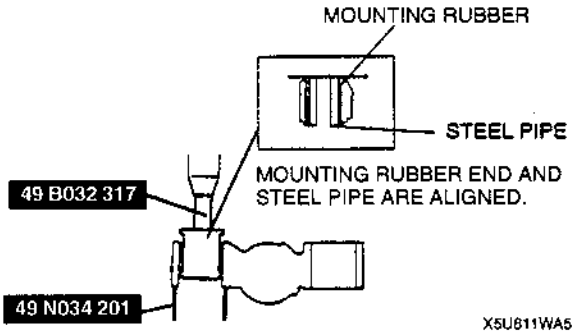

X5U611WA5

Tie-rod End Boot Assembly Note

1. Wipe the grease off the ball joint.
2. Put a small amount of lithium-based grease into a new dust boot.
3. Install the dust boot onto the tie-rod end by using the **SST** and a press.
4. Wipe away any excessive grease.

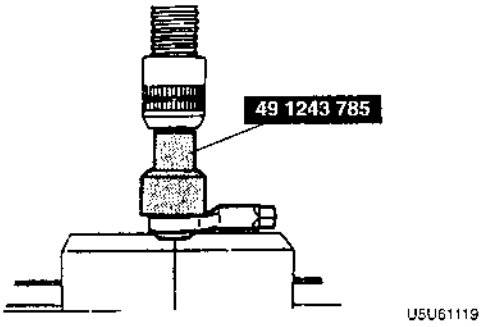

Bushing Assembly Note

- Align A and B and press a new bushing into the gear housing by using the **SST** until the bushing is fully seated.

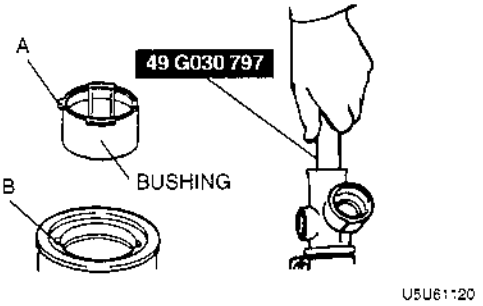

Rack Bushing Assembly Note

1. Align the tab of a new rack bushing with the hole in the column.
2. Push the rack bushing in until it is locked in place by the tab.

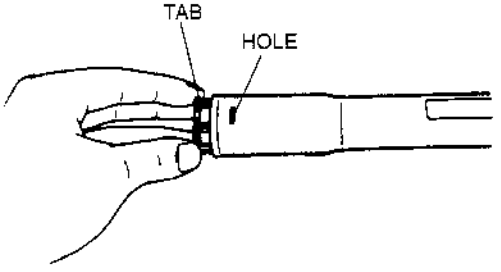

Lower Bearing Assembly Note

1. Apply grease to a new lower bearing.
2. Set the lower bearing onto the pinion shaft so that the NSK mark on the bearing faces downward.
3. Insert the pinion shaft together with the lower bearing.
4. Press the pinion shaft to seat the lower bearing.
5. Apply grease to the inside of the gear housing as shown.

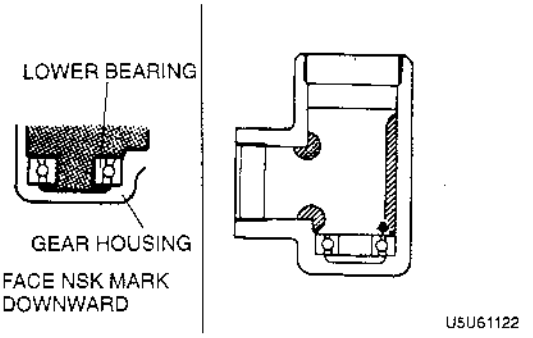

Steering Rack Assembly Note

1. Secure the mounting bracket in a vise.
2. Apply grease to the rack bushing.
3. Apply grease to the rack teeth and the sliding surface.

Caution

- **Do not plug the ventilation holes with the grease.**

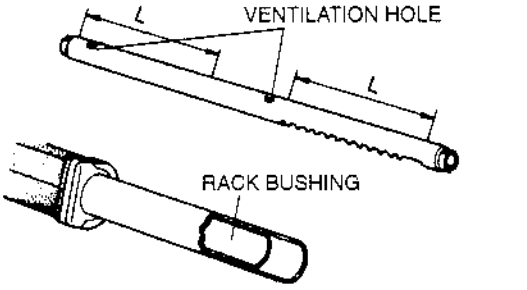

Caution

- **Installing the rack from the tube side can damage the rack bushing by dragging the rack teeth across it. When installing the rack, install it slowly and carefully.**

4. Slide the rack in from the tube side.

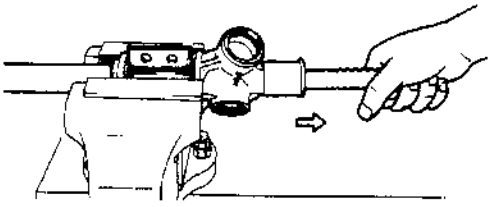

Pinion Shaft Assembly Note

1. Apply grease to the inner race of the upper bearing and install it to the pinion shaft.
2. Apply grease to the teeth of the pinion shaft.

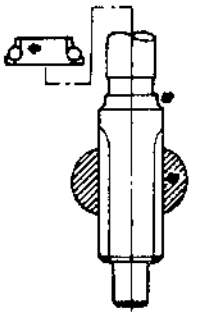

U5U61125

3. Turn the flat section of the rack toward the pinion, and insert the pinion.

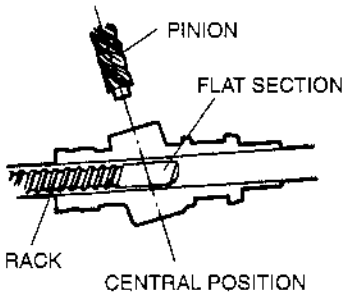

U5U61126

Rear Cover Assembly Note

1. Apply grease to the outer race of the upper bearing and install it in the gear housing.
2. Install a new oil seal to the rear cover.
3. Apply sealant to the threads of the rear cover and install it into the gear housing.
4. Rotate the pinion to the left and right a few times to seat the bearing.
5. Tighten the rear cover so that the starting torque of the pinion is **2.0—3.4 N·m {20—35 kgf·cm, 18—30 in·lbf} (Pull scale reading: 20—34 N {2.0—3.5 kgf, 4.4—7.7 lbf})** as inspected by using the **SST** and a pull scale.

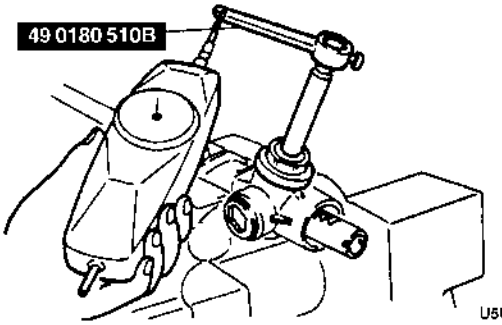

U5U61127

6. Tighten the locknut. Do not allow the rear cover to turn.

Tightening torque
50—68 N·m {5.0—7.0 kgf·m, 37—50 ft·lbf}

Adjusting Cover Assembly Note

1. Carefully move the rack so that the pinion is set to the center (neutral position) of the rack gear as shown.

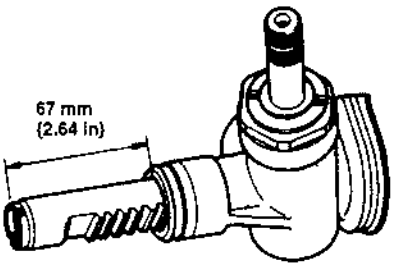

X5U611WAB

2. Install the roller component, needle roller, holder, dish springs, friction block, and the spring as shown.

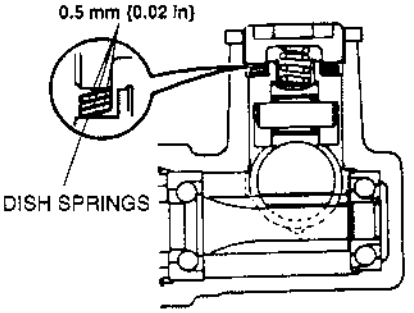

U5U61129

3. Tighten the adjusting cover to **9.8 N·m {100 kgf·cm, 87 in·lbf}**, then loosen it **25°—45°**. Use the **SSTs** to secure the adjusting cover and the locknut.

Tightening torque
40—58 N·m {4.0—6.0 kgf·m, 29—43 ft·lbf}

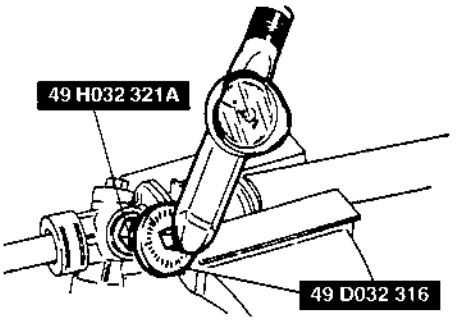

U5U61130

4. Measure the starting torque of the pinion by using the **SST**.

Center position ±90°
1.0—1.1 N·m
{9.5—11.5 kgf·cm, 8.3—9.9 in·lbf}

5. If not as specified, repeat steps 2 and 3.

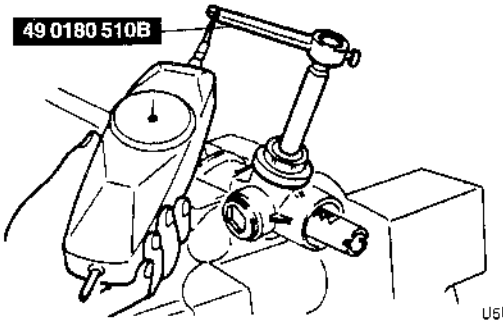

U5U61131

STEERING GEAR AND LINKAGE INSPECTION

Tie-rod End Inspection

1. Inspect the tie-rod end for damage and boot cracks. Replace it as necessary.
2. Inspect the ball joint for looseness. Replace the tie-rod end as necessary.
3. Rotate the ball joint 5 times.
4. Measure the rotation torque of the ball joint by using the **SST** and pull scale.

   Rotation torque
   0.3—2.9 N·m {3—30 kgf·cm, 2.6—26 in·lbf}
   Pull scale reading
   3—29 N {0.3—3.0 kgf, 0.7—6.6 lbf}

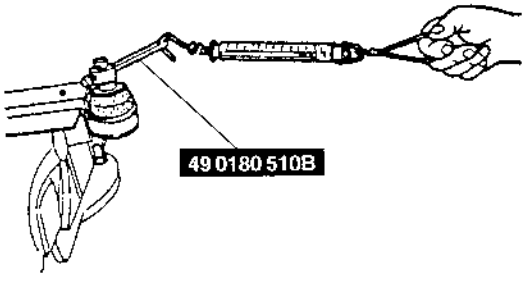

U5U61132

5. If not as specified, replace the tie-rod end.

Tie Rod Inspection

1. Inspect the tie rod for bending and damage. Replace it as necessary.
2. Inspect the ball joint for looseness. Replace the tie rod as necessary.
3. Swing the tie rod 5 times.
4. Measure the swing torque by using a pull scale.

   Swinging torque
   0.5—3.1 N·m {5—32 kgf·cm, 4.4—27.7 in·lbf}
   Pull scale reading
   3.0—19.6 N {0.3—2.0 kgf, 0.7—4.4 lbf}

X5U611W07

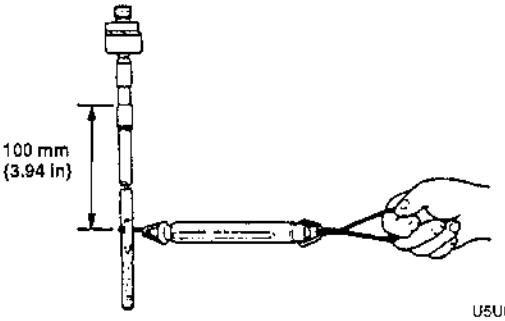

U5U61133

5. If not as specified, replace the tie rod.

Steering Rack Inspection

1. Inspect for cracks, damage, and tooth wear. Replace as necessary.
2. Measure runout of the rack.

   Runout
   0.3 mm {0.012 in} max.

3. If not as specified, replace the rack.

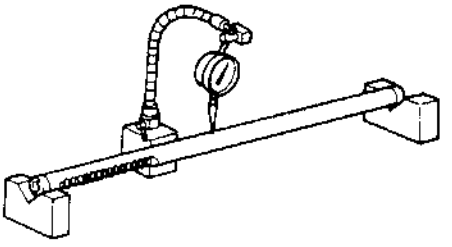

U5U61134

06–12 ENGINE SPEED SENSING POWER STEERING

AIR BLEEDING

X5U612W01

1. Inspect the fluid level.
2. Turn the steering wheel fully to the left and right several times with the engine not running.
3. Inspect the fluid level. If it has dropped, add fluid.
4. Repeat steps 2 and 3 until the fluid level stabilizes.
5. Start the engine and let it idle.
6. Turn the steering wheel fully to the left and right several times.
7. Verify that the fluid is not foamy and that the fluid level has not dropped.
8. Add fluid as necessary, and repeat steps 6 and 7.

POWER STEERING FLUID INSPECTION

X5U612W02

Fluid Level Inspection

1. Verify that the fluid level is between the H and L marks.
2. Add the specified power steering fluid if it is below the L mark. Remove the fluid if it is above the H mark.

Fluid specification
ATF M-III or equivalent (e.g. Dexron®II)

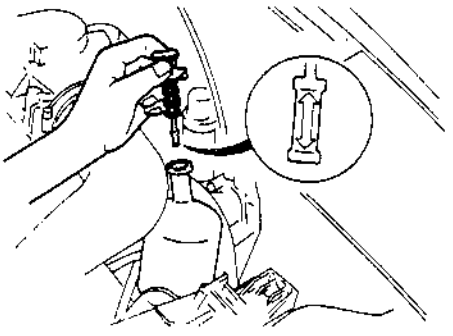

U5U6'201

Fluid Leakage Inspection

Caution

- **Never hold the steering wheel to the extreme left or right for more than five seconds with the engine running. This could damage the power steering pump.**

- Start the engine and let it idle. Turn the steering wheel fully left and fully right to apply fluid pressure. Inspect the points shown in the figure for fluid leakage.

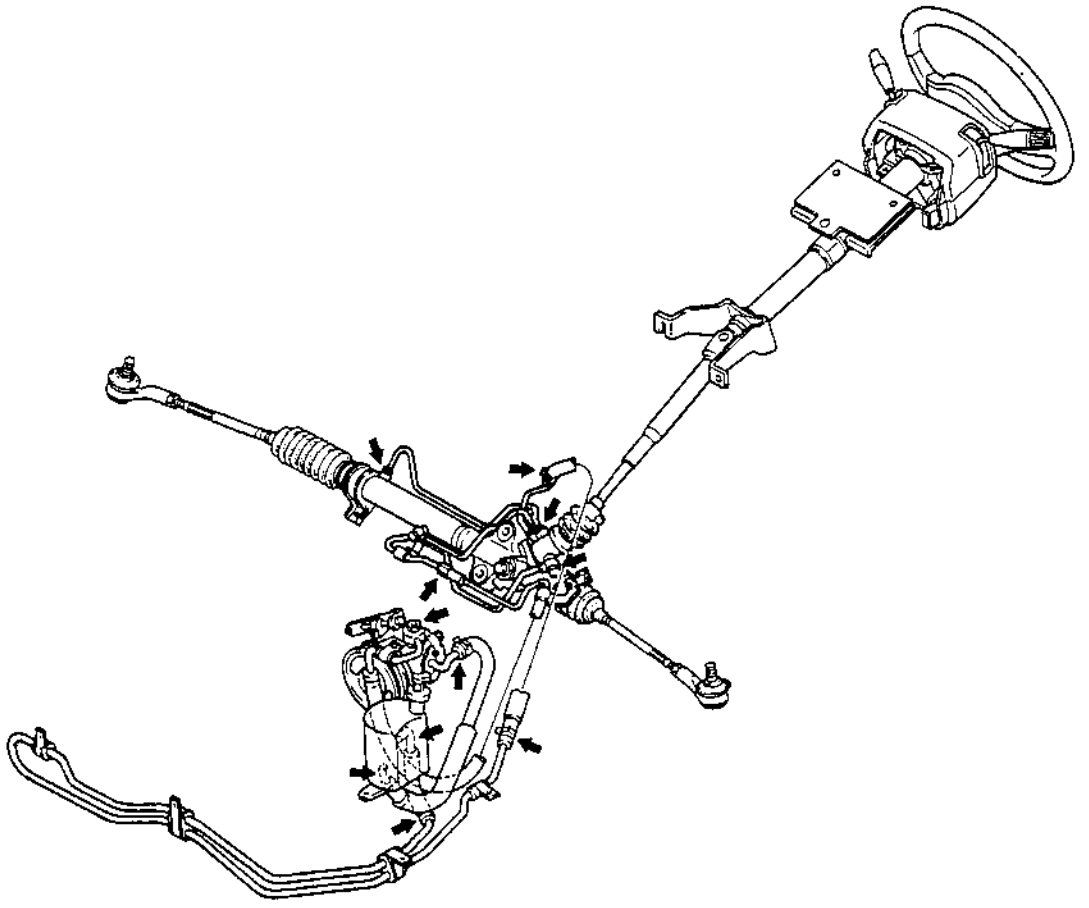

X5U612WA0

Fluid Pressure Inspection

1. Assemble the **SSTs** as shown in the figure.

Tightening torque
40—49 N·m {4.0—5.0 kgf·m, 29—36 ft·lbf}

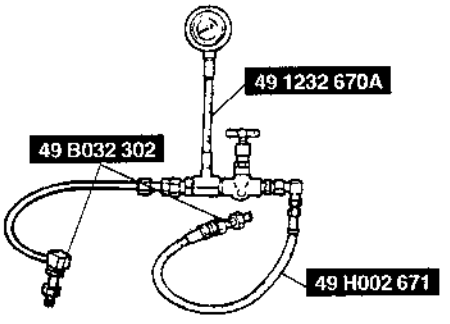

U5U61203

2. Mark both hose connections to ensure that the hose is reinstalled in its original position.
3. Disconnect the pressure hose from the oil pump. Attach the **SSTs**.

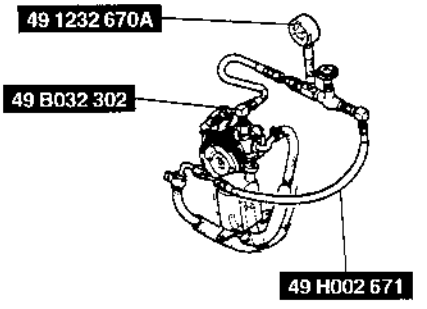

U5U61204

4. Bleed the air from the system.
5. Open the gauge valve fully. Start the engine and turn the steering wheel fully left and right to raise the fluid temperature to **50—60 °C {122—140 °F}**.

Caution

- **Do not let the valve stay closed for more than 5 seconds. The increase in fluid temperature will damage the oil pump.**

6. Close the gauge valve completely. Increase the engine speed to **1,000—1,500 rpm** and measure the fluid pressure generated by the oil pump. If the pressure is not within specification, replace the oil pump component.

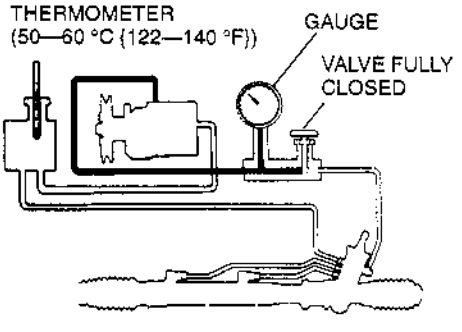

Oil pump fluid pressure
7846—8335 kPa
{80—85 kgf/cm^2, 1138—1208 psi}

7. Open the gauge valve fully and increase the engine speed to **1,000—1,500 rpm**.

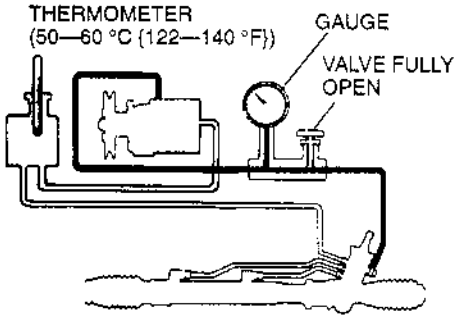

Caution
- **Never hold the steering wheel to the extreme left or right for more than five seconds with the engine running. This could damage the power steering pump.**

8. Turn the steering wheel fully to the left and right and measure the fluid pressure generated by the gear housing. If the pressure is not within specification, replace the gear housing component.

Gear housing fluid pressure
7846—8335 kPa
{80—85 kgf/cm^2, 1138—1208 psi}

9. Remove the gauge set. Install and tighten the pressure hose to the specified torque.

Tightening torque
32—47 N·m {3.2—4.8 kgf·m, 24—34 ft·lbf}

10. Bleed the air from the system.

STEERING WHEEL AND COLUMN INSPECTION

X5U612W03

Steering Wheel Play Inspection

(Refer to 06–11 STEERING WHEEL AND COLUMN INSPECTION, Steering Wheel Play Inspection.)

Steering Wheel Looseness Inspection

(Refer to 06–11 STEERING WHEEL AND COLUMN INSPECTION, Steering Wheel Looseness Inspection.)

Steering Wheel Effort Inspection

1. Check the following points:
   (1) Tire size and tire pressure
   (2) Fluid level
   (3) Drive belt deflection
2. With the vehicle on a hard, level surface, put the wheels in the straight-ahead position.
3. Start the engine and warm the power steering fluid to **50—60 °C {122—140 °F}**.
4. Remove the air bag module. (Refer to 08–10 DRIVER-SIDE AIR BAG MODULE REMOVAL/INSTALLATION.)
5. Measure the steering wheel effort by using a torque wrench.

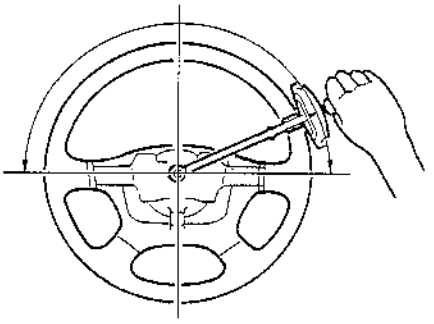

U5U61207

Steering wheel effort
7.8 N·m {80 kgf·cm, 69 in·lbf} max.

Note

- To determine whether the steering effort is satisfactory or not, perform the inspection on another vehicle of the same model and under the same conditions, and compare the results.
- The steering wheel effort varies with conditions as shown below.
  1. Road conditions, such as dry or wet, and asphalt or concrete.
  2. Tire conditions, such as brand, wear, and tire pressure.

6. If not as specified, note the following:
   (1) Air in system
   (2) Fluid leakage at hose or connectors
   (3) Function of oil pump and steering gear

STEERING WHEEL AND COLUMN REMOVAL/INSTALLATION

U5U612AD

(Refer to 06–11 STEERING WHEEL AND COLUMN REMOVAL/INSTALLATION.)

STEERING SHAFT DISASSEMBLY/ASSEMBLY

U5U612AE

(Refer to 06–11 STEERING SHAFT DISASSEMBLY/ASSEMBLY.)

STEERING SHAFT INSPECTION

U5U612AF

(Refer to 06–11 STEERING SHAFT INSPECTION.)

STEERING GEAR AND LINKAGE REMOVAL/INSTALLATION

X5U612W04

Caution

- **Performing the following procedures without first removing the ABS wheel-speed sensor may possibly cause an open circuit in the harness if it is pulled by mistake. Before performing the following procedures, remove the ABS wheel-speed sensor (axle side) and fix it to an appropriate place where the sensor will not be pulled by mistake while servicing the vehicle.**

1. Remove in the order indicated in the table.
2. With the wheels in the straight-ahead position, install in the reverse order of removal.
3. After installation, inspect the total toe-in and adjust it as necessary.

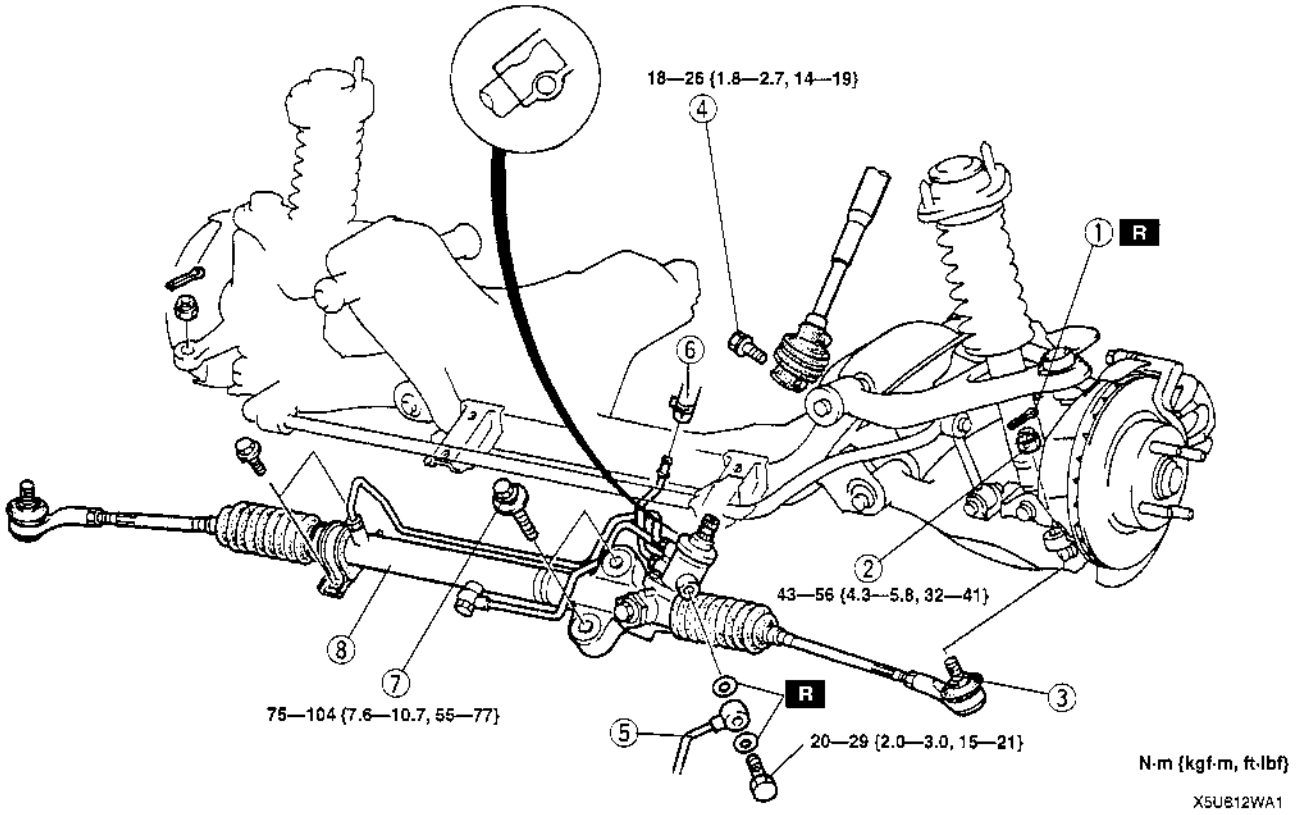

1	Cotter pin
2	Nut
3	Tie-rod end ball joint ☞ 06–11 STEERING GEAR AND LINKAGE REMOVAL/INSTALLATION, Tie-rod End Ball Joint Removal Note

4	Bolt
5	Pressure pipe
6	Return hose
7	Mounting bracket bolt
8	Steering gear and linkage

STEERING GEAR AND LINKAGE DISASSEMBLY/ASSEMBLY

X5U612W05

1. Disassemble in the order indicated in the table.
2. Assemble in the reverse order of disassembly.

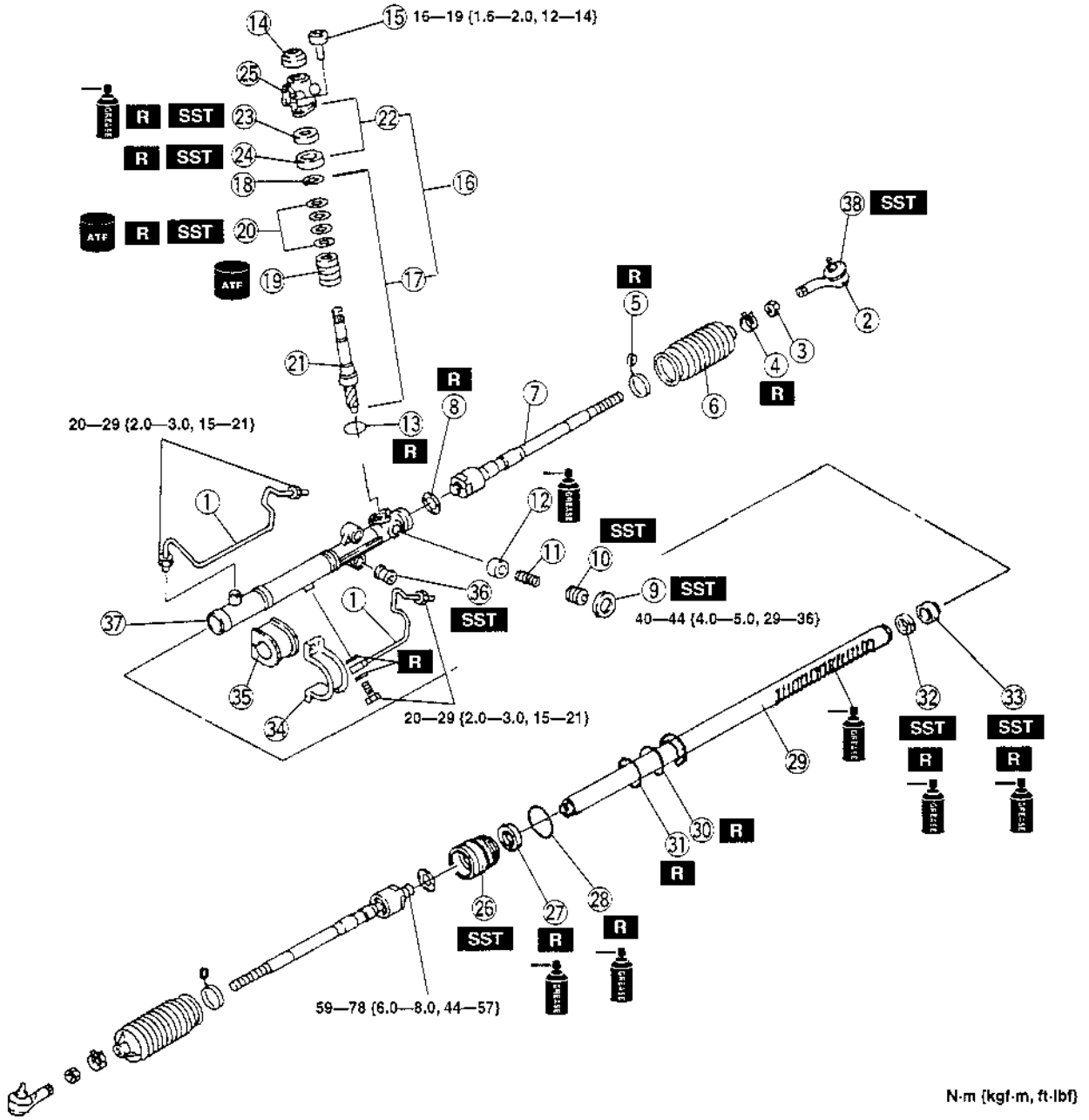

X5U612WA2

1	Oil pipe
2	Tie-rod end
3	Locknut (Tie-rod end)
4	Boot band
5	Boot wire
6	Boot
7	Tie rod ☞ 06–11 STEERING GEAR AND LINKAGE DISASSEMBLY/ASSEMBLY, Tie Rod Disassembly Note

8	Washer
9	Locknut (Adjusting cover) ☞ Disassembly Note
10	Adjusting cover ☞ Assembly Note
11	Yoke spring
12	Support yoke
13	O-ring
14	Dust cover
15	Socket bolt

16	Pinion shaft and housing component ☞ Disassembly Note
17	Pinion shaft component ☞ Disassembly Note
18	Snap ring ☞ Disassembly Note
19	Control valve component
20	Seal ring ☞ Assembly Note
21	Pinion shaft
22	Valve housing component
23	Upper bearing ☞ Disassembly Note ☞ Assembly Note
24	Oil seal ☞ Disassembly Note ☞ Assembly Note
25	Valve housing
26	Holder ☞ Disassembly Note ☞ Assembly Note
27	U gasket
28	O-ring
29	Steering rack
30	Seal ring
31	O-ring
32	Oil seal ☞ Disassembly Note ☞ Assembly Note
33	Inner guide ☞ Disassembly Note ☞ Assembly Note
34	Mounting bracket
35	Mount
36	Mounting rubber ☞ 06–11 STEERING GEAR AND LINKAGE REMOVAL/INSTALLATION, Mounting Rubber Disassembly Note ☞ 06–11 STEERING GEAR AND LINKAGE REMOVAL/INSTALLATION, Mounting Rubber Assembly Note
37	Gear housing
38	Tie-rod end boot ☞ 06–11 STEERING GEAR AND LINKAGE DISASSEMBLY/ASSEMBLY, Tie-rod End Boot Removal Note ☞ 06–11 STEERING GEAR AND LINKAGE DISASSEMBLY/ASSEMBLY, Tie-rod End Boot Assembly Note

Locknut Disassembly Note

- Remove the locknut by using the **SST**.

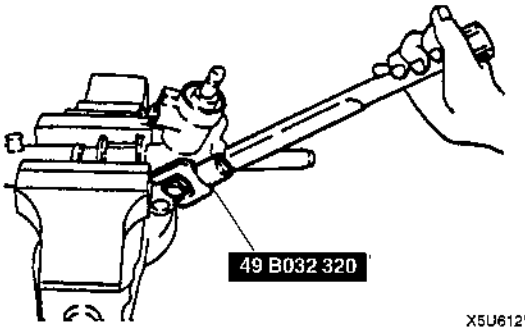

X5U612WA3

Pinion Shaft and Housing Component Disassembly Note

1. Remove the socket bolts (2 points) which fix the pinion shaft and housing.

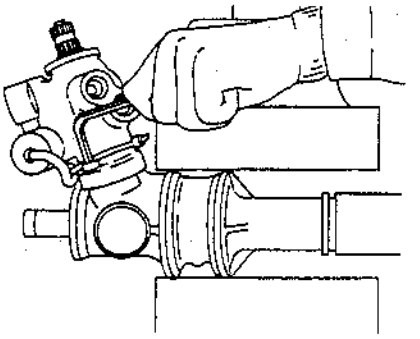

U5U61210

2. Hold the pinion shaft as shown, and pull out the pinion shaft and housing component.

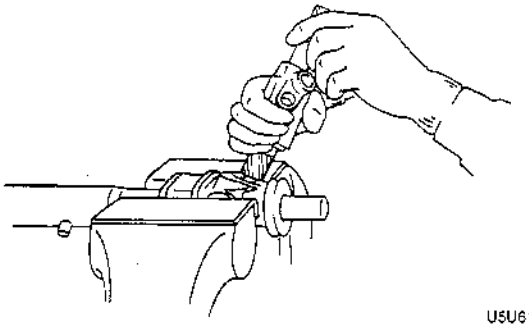

U5U61211

Pinion Shaft Component Disassembly Note

Note
- If the pinion shaft does not come out easily, remove it by using a press.

- Push out the pinion shaft component from the valve housing as shown.

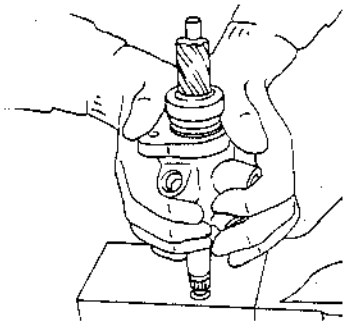

U5U61212

Snap Ring Disassembly Note
- Carefully remove the snap ring without damaging the pinion shaft component.

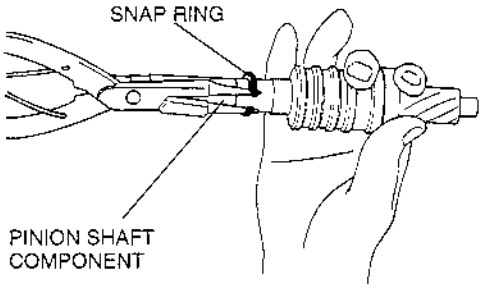

U5U61213

Upper Bearing, Oil Seal Disassembly Note
1. Set the **SST** as shown.
2. Using a press, remove the oil seal and upper bearing without applying pressure to the edge of the valve housing.

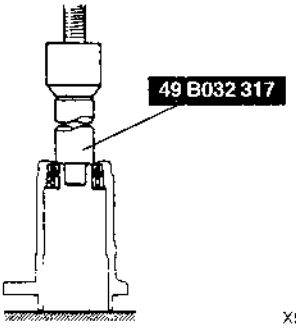

X5U612WA4

Holder Disassembly Note
1. Cut away the staked area by using a drill.

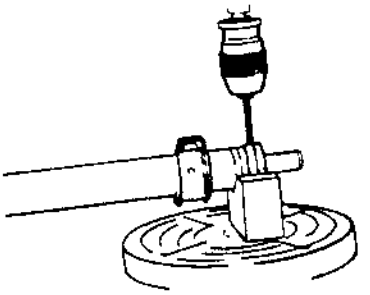

X5U612WA5

Caution
- **Carefully pull out the holder without damaging the U gasket.**

2. Remove the holder.

Oil Seal, Inner Guide Disassembly Note
1. Set the **SSTs** into the valve side.
2. Press out the oil seal and inner guide.

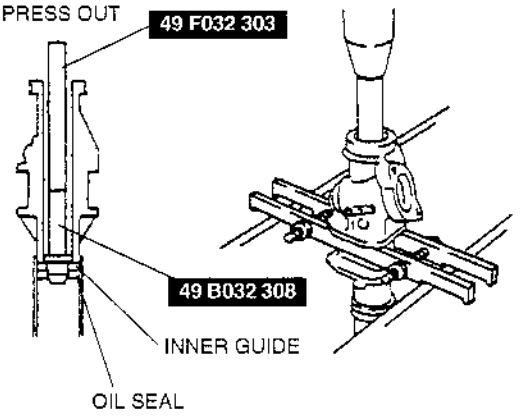

X5U612WAF

Oil Seal, Inner Guide Assembly Note

1. Install a new O-ring and new seal ring to the rack's piston.
2. After installing the seal ring, seat it properly at the piston circumference.
3. Install a new oil seal and inner guide to the **SST**.

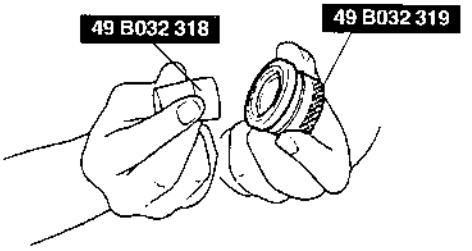

X5U612WA7

4. Using the **SST**, place the oil seal and inner guide at the edge of the steering rack's pinion, and remove the **SST**.

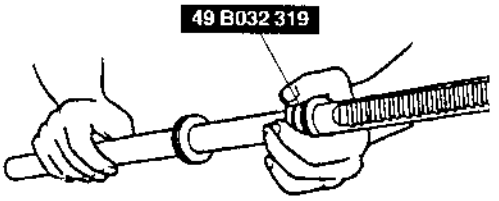

X5U612WA8

Caution

- **When pressing in, do not apply a load pressure of more than 39230 kPa {400 kg/cm^2, 5688 psi}, because to do so will damage the oil seal and inner guide.**
- **Apply grease to the seal ring, oil seal and inner guide.**

5. After mounting the steering rack to the gear housing, use a press to install the oil seal and inner guide to the correct position.

Holder Assembly Note

1. Apply grease to the U-gasket and O-ring.
2. Assemble the U-gasket and O-ring into the holder.
3. Assemble the holder by using the **SST**.

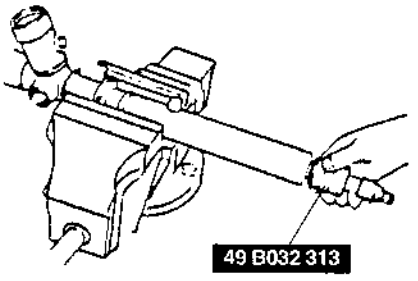

X5U612WA9

4. Stake the holder to the cylinder by using a punch.

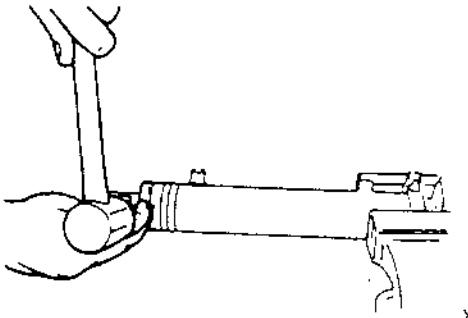

X5U612WAA

Oil Seal Assembly Note

1. Apply grease to a new oil seal.
2. Press in the new oil seal by using the **SSTs**.

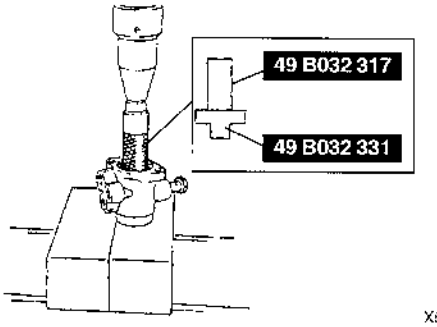

X5U612WAB

Upper Bearing Assembly Note

1. Apply grease to a new upper bearing.
2. Press in the upper bearing by using the **SST**.

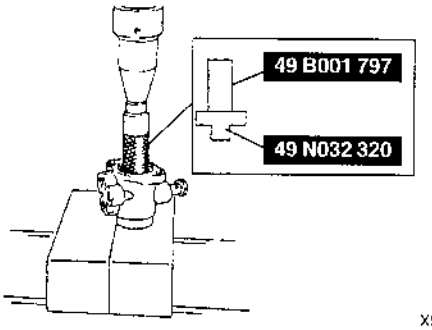

X5U612WAC

Seal Ring Assembly Note

1. Install a new seal ring to the valve part of the pinion shaft by using the **SST**.
2. After installing it, seat it properly by using the **SST**.

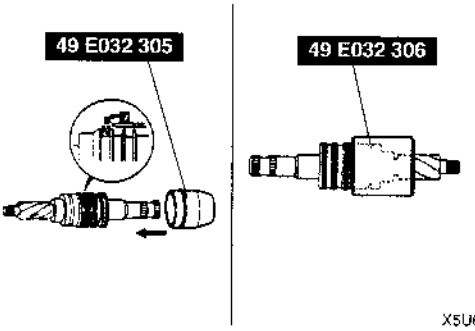

X5U612WAD

3. Install the snap ring.

Adjusting Cover Assembly Note

1. Set the rack to the center position.
2. Tighten the adjusting cover to **4.9 N·m {50 kgf·cm, 43 in·lbf}** three times, then return it **25°** by using the **SST**.

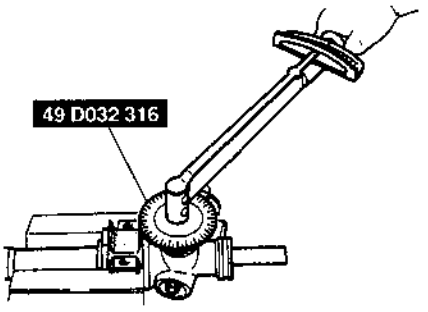

U5U61237

3. Apply sealant to the threads of the locknut.
4. Attach the locknut.
5. Measure the pinion torque by using the **SST** and a pull scale.

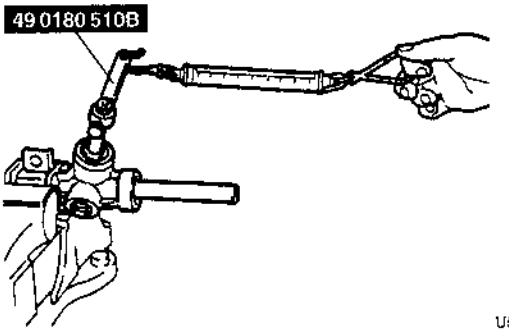

U5U61238

Standard
Center of rack ±90° 1.0—1.1 N·m {10—12 kgf·cm, 8.7—10.4 in·lbf}

6. If not as the specified, repeat steps 2 through 6.
7. Install the locknut by using the **SST** (49 B032 320).

Tightening torque
40—49 N·m {4.0—5.0 kgf·m, 29—36 ft·lbf}

Hermetic sealing inspection

1. Connect the **SSTs** to the power cylinder section of the gear housing.
2. Apply **53.3 kPa {400 mmHg, 15.7 inHg}** vacuum with a vacuum pump and verify that it is held for at least **30 seconds**.
3. If the vacuum is not held, replace the oil seal.

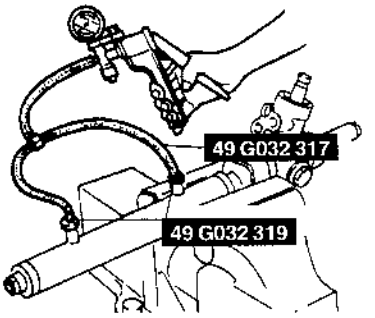

U5U61239

STEERING GEAR AND LINKAGE INSPECTION

X5U612W06

Tie-rod End Inspection
(Refer to 06–11 STEERING GEAR AND LINKAGE INSPECTION, Tie-rod End Inspection.)

Tie Rod Inspection
(Refer to 06–11 STEERING GEAR AND LINKAGE INSPECTION, Tie Rod Inspection.)

Steering Rack Inspection
(Refer to 06–11 STEERING GEAR AND LINKAGE INSPECTION, Steering Rack Inspection.)

POWER STEERING OIL PUMP REMOVAL/INSTALLATION

X5U612W07

1. Remove the cooling fan. (Refer to 01–12 RADIATOR REMOVAL/INSTALLATION.)
2. Remove in the order indicated in the table.
3. Install in the reverse order of removal.
4. Adjust the drive belt. (Refer to 01–10 DRIVE BELT ADJUSTMENT.)

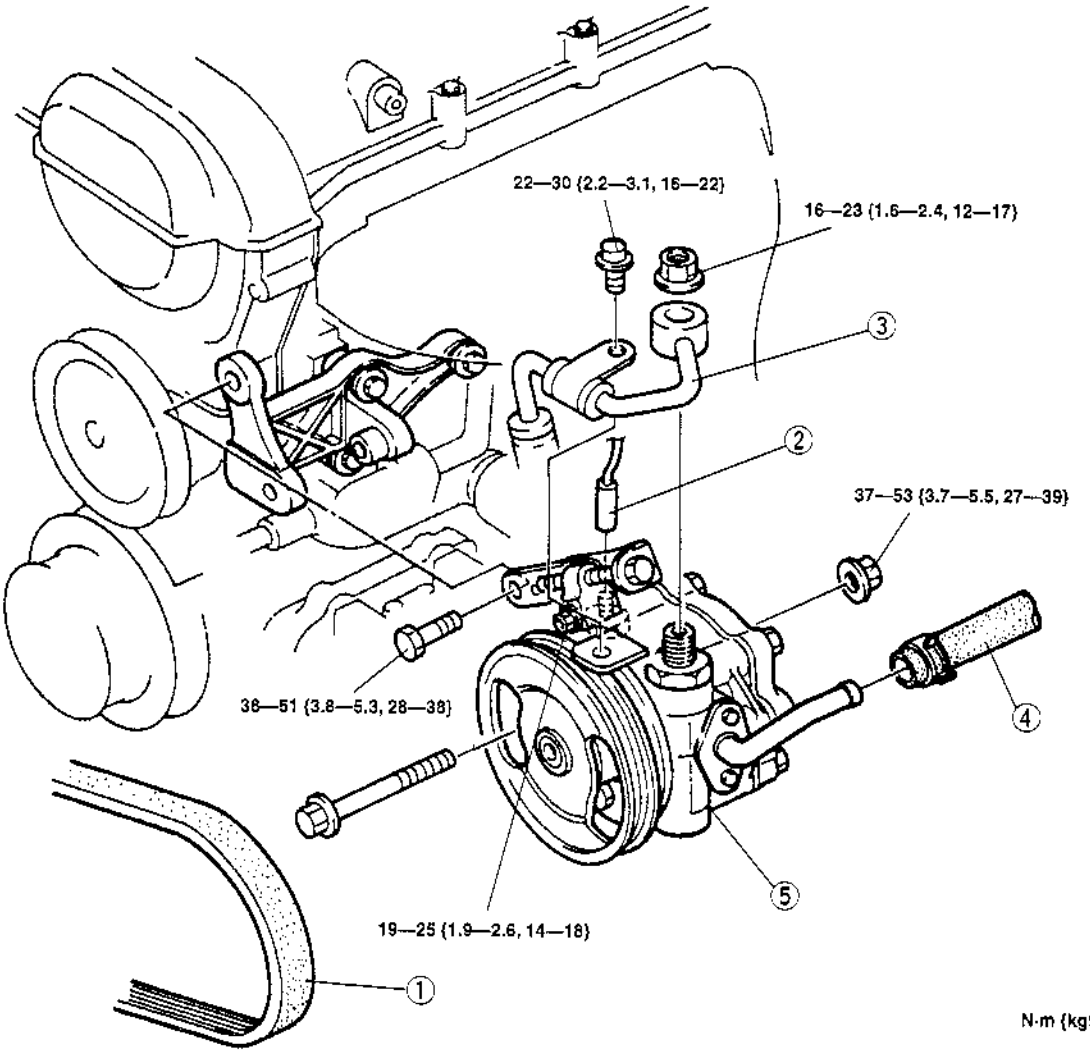

X5U612WA6

1	Drive belt
2	Power steering pressure switch connector
3	Pressure pipe

4	Return hose
5	Power steering oil pump

POWER STEERING OIL PUMP DISASSEMBLY/ASSEMBLY

X5U612W08

1. The following procedure is for replacement of the O-rings only. Replace the pump component if other repairs are necessary.
2. Disassemble in the order indicated in the table.
3. Assemble in the reverse order of disassembly.

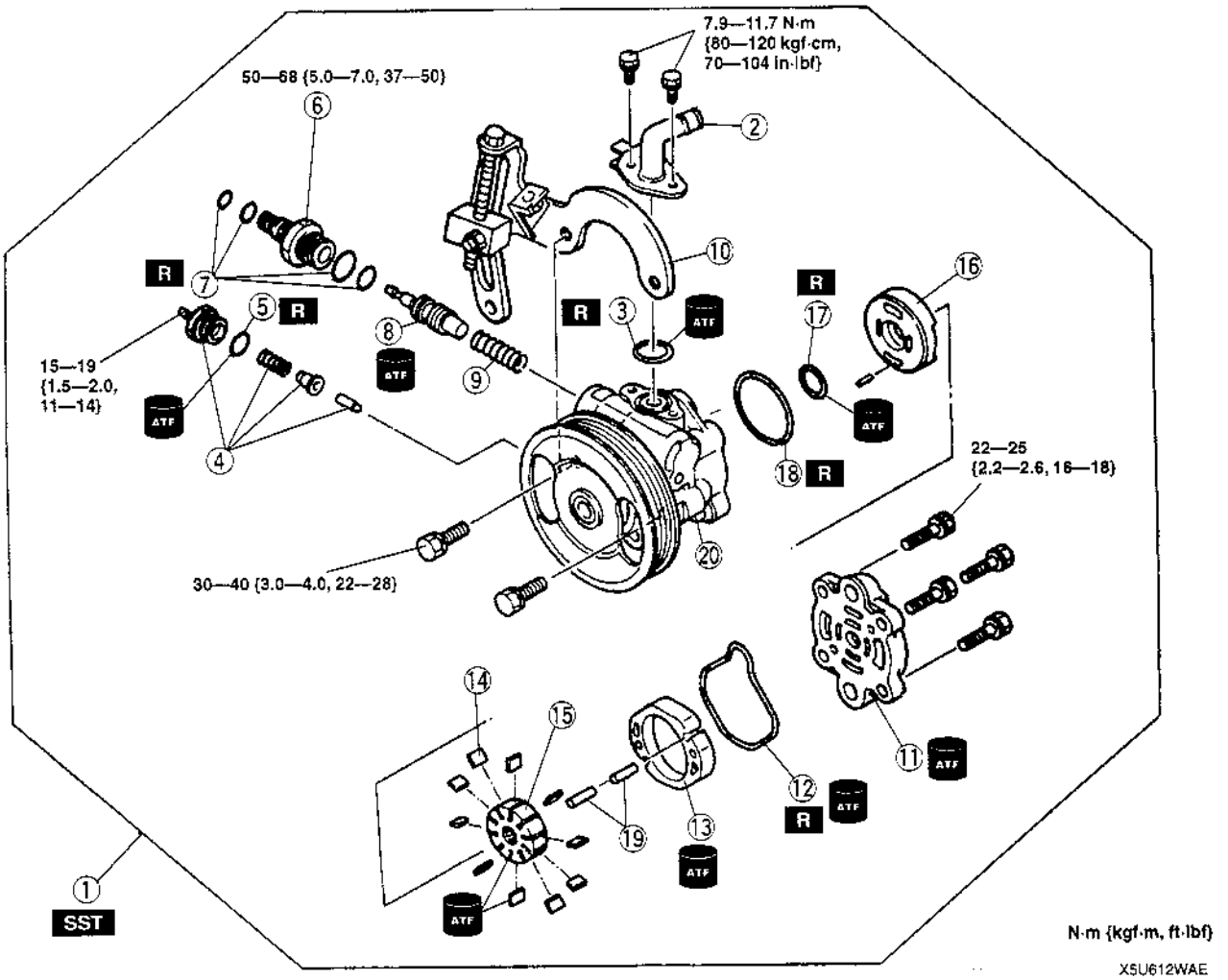

X5U612WAE

1	Oil pump ☞ Disassembly Note
2	Suction pipe
3	O-ring
4	Power steering pressure switch component
5	O-ring
6	Connector
7	O-ring
8	Control valve
9	Spring
10	Bracket
11	Pump body rear

12	O-ring
13	Cam ring ☞ Assembly Note
14	Blade ☞ Assembly Note
15	Rotor ☞ Assembly Note
16	Side plate
17	O-ring
18	O-ring
19	Pin
20	Pump body front

Power Steering Oil Pump Disassembly Note

- Use the **SST** when securing the oil pump in a vise, so that force is not applied to the pulley or shaft.

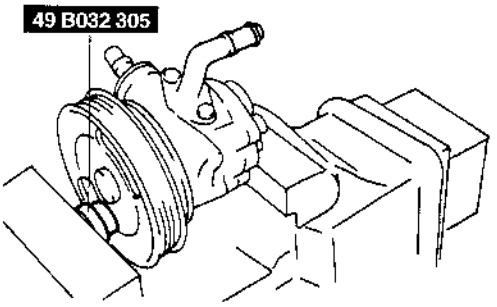

U5U61242

Rotor Assembly Note

- Install the rotor with the identification mark facing upward.

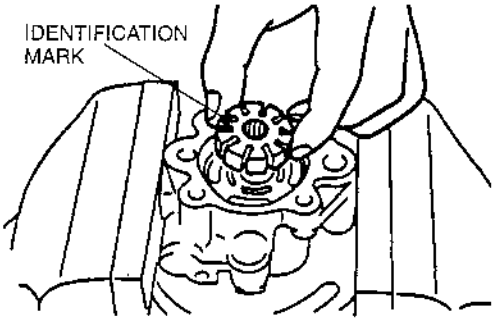

U5U61243

Cam Ring Assembly Note

- Install the cam ring with the identification mark facing downward.

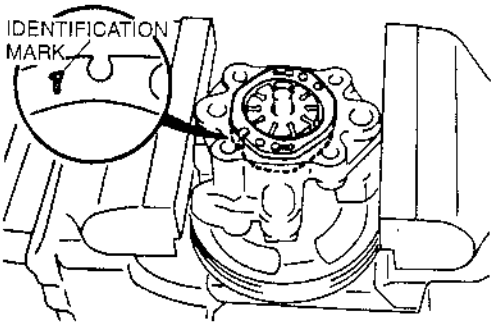

U5U61244

Blade Assembly Note

- Install the blades into the rotor with the rounded edges facing outward.

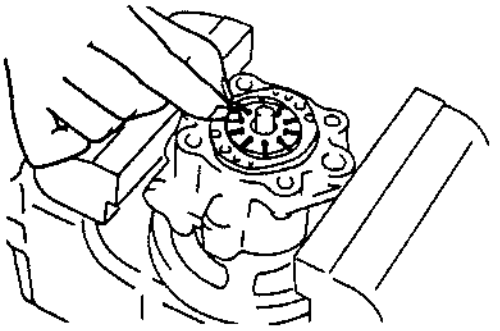

U5U61245

06–50 TECHNICAL DATA

06 STEERING

X5U650W01

Item			Manual steering	Engine speed sensing power steering
Steering wheel	Play (mm {in})		0—30 {0—1.18}	
	Effort (N·m {kgf·cm, in·lbf})		5—29 {0.5—3.0, 1.1—6.6}	7.8 {80, 69} max.
Steering column and shaft	Length (mm {in})		593.8—595.8 {23.38—23.45}	
Steering gear	Tie-rod end	Rotation torque (N·m {kgf·cm, in·lbf})	0.5—3.1 {5—32, 4.4—22.7}	
		Pull-scale reading (N {kgf, lbf})	3.0—19.6 {0.3—2.0, 0.7—4.4}	
	Tie rod	Swinging torque (N·m {kgf·cm, in·lbf})	0.1—3.4 {1—35, 0.9—30.3}	
		Pull-scale reading (N {kgf, lbf})	0.7—21.5 {0.07—2.20, 0.16—4.84}	
	Pinion shaft	Rotation torque (N·m {kgf·cm, in·lbf})	1.0—1.1 {9.5—11.5, 8.3—9.9}	1.0—1.1 {10—12, 8.7—10.4}
	Gear housing fluid pressure (kPa {kgf/cm^2, psi})		—	7846—8335 {80—85, 1138—1208}
Power steering oil pump	Oil pump fluid pressure (kPa {kgf/cm^2, psi})		—	7846—8335 {80—85, 1138—1208}
Power steering system	Fluid	Type	—	ATF M-III or equivalent (e.g. Dexron®II)
		Capacity (L {US qt, Imp qt})	—	0.79 {0.84, 0.70} [MT] 0.68 {0.72, 0.60} [AT]

06–60 SERVICE TOOLS

06 STEERING SST

X5U660WC1

49 1243 785 Boot installer T1243785X	49 0180 510B Preload attachment TC1805:0B	49 0208 701A Boot air out tool T0208701A
49 H032 321A Hexagon wrench TH032321A	49 D032 316 Protractor TD0323'6X	49 G030 797 Handle TG030797X
49 T028 3A0 Ball joint puller set TT0283A0X	49 T028 303 Body (Part of 49 T028 3A0) TT028303X	49 T028 304 Attachment (Part of 49 T028 3A0) TT028304X
49 B032 317 Bearing & oil seal remover TB032317X	49 1232 670A Power steering gauge set T1232670A	49 1232 672 Gauge (Part of 49 1232 670A) T1232672X
49 1232 673 Valve body (Part of 49 1232 670A) T1232673X	49 H002 671 Power steering gauge adapter TH002671X	49 B032 304 Power steering gauge adapter TB032304X
49 B032 308 Rod seal remover body TB032308X	49 B032 318 Rod seal guide TB032318X	49 B032 319 Rod seal protector body TB032319X
49 B032 313 Outer box protector TB0323'3X	49 B032 320 Wrench TB032320X	49 B032 331 Oil seal installer TB032331X

49 B001 797 Handle  TB001797X	49 N034 201 Oil seal installer 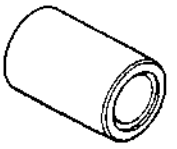 TN034201X	49 F032 303 Handle  TF032303X
49 N032 320 Oil seal installer  TN032320X	49 G032 317 Hose 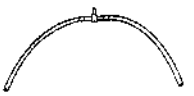 TG032317X	49 G032 319 Adapter 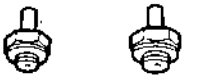 TG032319X

HVAC

07
SECTION

07–01 TROUBLESHOOTING

FOREWORD

X5U701W01

- Refer to 00–00 GENERAL PROCEDURE thoroughly read and understand the basic flow of troubleshooting to properly perform the procedures.
- For the steps that have an asterisk(*), inspect the connector/terminal connection for continuity and damage. If the connection is poor, reconnect it, or repair or replace the appropriate parts as necessary.
- The areas for inspection (steps) are given according to various circuit malfunctions. Use the chart below to verify the symptoms of the trouble in order to diagnose the appropriate area.

TROUBLESHOOTING INDEX

X5U701W02

No.	SYMPTOM
1	Insufficient blown air volume and/or no blown air depending on airflow mode.
2	No blown air in any airflow mode. Blown air volume does not change at any fan speed.
3	Airflow mode does not change.
4	Improper air circulation and/or no air circulation.
5	No operation at any temperature setting.
6	Insufficient A/C cooling.
7	No cool air.
8	Noise while operating A/C system.

SYMPTOM TROUBLESHOOTING

X5U701WC3

1	Insufficient blown air volume and/or no blown air depending on airflow mode.

TROUBLESHOOTING HINTS
① Malfunction in VENT mode system
Steps 1–4
② Malfunction in HEAT mode system
Step 5
③ Malfunction in DEFROSTER mode system
Steps 6–8

STEP	INSPECTION		ACTION
1	When airflow mode control dial is operated, is appropriate resistance felt and can it be moved to its full range?	Yes	Go to next step.
		No	Go to step 1 of troubleshooting index No. 3.
2	Is air discharged when in VENT mode?	Yes	Go to step 5.
		No	Go to next step.
3	Is vent clogged?	Yes	Remove obstruction, then go to step 9.
		No	Go to next step.
4	Is duct in dashboard properly installed?	Yes	Inspect duct for clogging, deformity and air leakage, then go to step 9.
		No	Install duct securely in the proper position, then go to step 9.
5	Is air discharged when in HEAT mode?	Yes	Go to next step.
		No	Inspect vent for clogging, then go to step 9.
6	Is air discharged when in DEFROSTER mode?	Yes	Operation is okay. Reinspect malfunction symptoms.
		No	Go to next step.
7	Is vent clogged?	Yes	Remove obstruction, then go to step 9.
		No	Go to next step.
8	Is defroster duct properly installed?	Yes	Inspect duct for clogging, deformity, and air leakage, then go to next step.
		No	Install duct securely in the proper position, then go to next step.
9	Is air discharged?	Yes	Troubleshooting completed. Explain repairs to customer.
		No	Reinspect malfunction symptoms, then repeat from step 1 if malfunction reoccurs.

2	No blown air in any airflow mode. Blown air volume does not change at any fan speed.

TROUBLESHOOTING HINTS
① Blower relay, blower motor, resistor, fan switch malfunction
Step 1
② Blower unit malfunction
Steps 2–4

STEP	INSPECTION		ACTION
1	Inspect the following systems and electrical parts. • Blower relay, blower motor, resistor, fan switch. Are they okay?	Yes	Go to next step.
		No	Repair or replace malfunctioning part, then go to step 5.
2	Turn ignition switch to ON. Turn fan switch on. Recirculate air inside vehicle. Does fan in blower unit rotate smoothly?	Yes	Go to step 4.
		No	Go to next step.
3	Inspect fan in blower unit. • Is fan free of interference from blower unit case? • Is fan free of foreign material and obstructions? Is fan okay?	Yes	Go to next step.
		No	Remove obstruction, repair or replace fan and blower unit case, then go to step 5.

STEP	INSPECTION		ACTION
4	Is blower unit intake vent clogged?	Yes	Remove obstruction, then go to next step.
		No	Inspect if there are any obstructions in passage between blower unit and heater unit, then go to next step.
5	Is air discharged?	Yes	Troubleshooting completed. Explain repairs to customer.
		No	Reinspect malfunction symptoms, then repeat from step 1 if malfunction reoccurs.

3 Airflow mode does not change.

TROUBLESHOOTING HINTS

① Heater unit's airflow mode link, airflow mode crank, airflow mode rod, airflow mode wire, wire clamp malfunction
Steps 1, 2

② Heater control unit's rack-and-pinion, airflow mode wire malfunction
Step 3

③ Malfunction in one or more heater unit door(s)
Steps 4, 5

STEP	INSPECTION		ACTION
1	Inspect heater unit's airflow mode links, airflow mode cranks, airflow mode rods, and wire clamp. • Is there grease on links and cranks? • Are links, cranks and rods installed securely and in the proper position? • Is wire clamp free of deformation? Are above items okay?	Yes	Go to next step.
		No	Apply grease or install links, cranks and rods securely in their proper positions, repair or replace wire clamp, then go to step 6.
2	Is airflow mode wire positioned securely and correctly vis-a-vis the heater unit's airflow mode links?	Yes	Go to next step.
		No	Adjust airflow mode wire or install correctly, then go to step 6.
3	Inspect heater control unit. • Is rack-and-pinion properly engaged? • Is airflow mode wire properly installed in correct direction on rack? Are above items okay?	Yes	Go to next step.
		No	Properly engage rack-and-pinion or install airflow mode wire in correct direction, then go to step 6.
4	Is there any foreign material or obstructions in any of heater unit's doors?	Yes	Remove obstruction, then go to step 6.
		No	Go to next step.
5	Are all doors within heater unit securely and properly positioned?	Yes	Inspect each door for cracks or damage, then go to next step.
		No	Install malfunction doors securely in proper position, then go to next step.
6	Does airflow mode change?	Yes	Troubleshooting completed. Explain repairs to customer.
		No	Reinspect malfunction symptoms, then repeat from step 1 if malfunction reoccurs.

4 Improper air circulation and/or no air circulation.

TROUBLESHOOTING HINTS

① Blower unit's air intake link, air intake crank, air intake wire, wire clamp malfunction
Steps 1, 2

② Heater control unit's air intake wire malfunction
Step 3

③ Blower unit's air intake door malfunction
Steps 4, 5

STEP	INSPECTION		ACTION
1	Inspect blower unit's air intake links, air intake cranks, and wire clamp. • Is there grease on links and cranks? • Are links and cranks securely and properly positioned? • Is wire clamp free of deformation? Are above items okay?	Yes	Go to next step.
		No	Apply grease or install links and cranks properly and securely, repair or replace wire clamp, then go to step 6.

STEP	INSPECTION		ACTION
2	Is air intake wire positioned securely and correctly vis-a-vis the blower unit's air intake links?	Yes	Go to next step.
		No	Adjust air intake wire or install securely in correct position, then go to step 6.
3	Is air intake wire positioned securely and correctly vis-a-vis the heater control unit's link?	Yes	Go to next step.
		No	Install air intake wire securely in correct position, then go to step 6.
4	Is there any foreign material or obstruction in blower unit's air intake door?	Yes	Remove obstruction, then go to step 6.
		No	Go to next step.
5	Is blower unit's air intake door securely and properly positioned?	Yes	Inspect air intake door for cracks or damage, then go to next step.
		No	Install air intake door securely in proper position, then go to next step.
6	Does air circulate?	Yes	Troubleshooting completed. Explain repairs to customer.
		No	Reinspect malfunction symptoms, then repeat from step 1 if malfunction reoccurs.

5	**No operation in any temperature setting.**		
TROUBLESHOOTING HINTS ① Heater unit's air mix link, air mix crank, air mix rod, air mix wire, wire clamp malfunction Steps 2, 3 ② Heater control unit's rack-and pinion, air mix wire malfunction Step 4 ③ Heater unit's air mix door malfunction Steps 5, 6			
STEP	INSPECTION		ACTION
1	Is coolant sufficiently warmed up?	Yes	Go to next step.
		No	Warm engine for **approximately 10 minutes**, then go to step 7.
2	Inspect heater unit's air mix links, air mix cranks, air mix rods, and wire clamp. • Is there grease on links and cranks? • Are links, cranks, and rods securely installed in their proper positions? • Is wire clamp free of deformation? Are above items okay?	Yes	Go to next step.
		No	Apply grease or install links, cranks, and rods securely in their proper positions, repair or replace wire clamp, then go to step 7.
3	Is air mix wire securely installed in the correct position vis-a-vis heater unit's air mix links?	Yes	Go to next step.
		No	Adjust air mix wire or install securely in correct position then go to step 7.
4	Inspect heater control unit. • Is rack-and pinion properly engaged? • Is air mix wire properly installed in correct position vis-a-vis rack? Are above items okay?	Yes	Go to next step.
		No	Properly engage rack-and pinion or install air mix wire in correct position, then go to step 7.
5	Is there any foreign material or obstruction in heater unit's air mix doors?	Yes	Remove obstruction, then go to step 7.
		No	Go top next step.
6	Is heater unit's air mix door securely and properly installed?	Yes	Inspect air mix door for cracks or damage, then go to next step.
		No	Install air mix door securely in proper position, then go to next step.
7	Does unit operate in every temperature setting?	Yes	Troubleshooting completed. Explain repairs to customer.
		No	Reinspect malfunction symptoms, then repeat from step 1 if malfunction reoccurs.

6	Insufficient A/C cooling.

TROUBLESHOOTING HINTS

① Drive belt malfunction
Step 3
② Malfunction in blower unit or condenser
Steps 5, 6
③ Malfunction in receiver/drier or expansion valve (valve closes too much)
Steps 9, 10
④ Malfunction in refrigerant lines
Step 11, 12
⑤ A/C compressor system malfunction, insufficient compressor oil
Steps 14, 15
⑥ Over filling of compressor oil, malfunction in expansion valve or heater unit's air mix link system
Steps 16–18

STEP	INSPECTION		ACTION
1	Is vent air temperature **6 °C {43 °F} or less**?	Yes	Operation is normal. (To prevent evaporator within cooling unit from freezing, A/C compressor stops right away when ambient air temperature is **6 °C {43 °F} or less**.
		No	Go to next step.
2	Perform refrigerant system performance test. ☞ 07–10 PERFORMANCE TEST Is operation normal?	Yes	Operation is normal. (Reinspect malfunction symptoms.)
		No	Go to next step.
3	Inspect drive belt. ☞ 01–10 DRIVE BELT INSPECTION Is it okay?	Yes	Go to next step.
		No	Adjust or replace drive belt, then go to step 19. ☞ 01–10 DRIVE BELT ADJUSTMENT
4	Inspect refrigerant pressure. ☞ 07–10 REFRIGERANT PRESSURE CHECK Are both high-pressure and low-pressure values high?	Yes	Go to next step.
		No	Go to step 7.
5	Is blower unit intake clogged?	Yes	Remove obstruction, then go to step 19. (If air does not reach evaporator within cooling unit, heat exchange does not occur and refrigerant pressure becomes high. Therefore, removal of obstruction is necessary.)
		No	Go to next step.
6	Inspect condenser. ☞ 07–10 CONDENSER INSPECTION Is it okay?	Yes	Adjust refrigerant to specified amount, then go to step 19. (Excessive amount of refrigerant.)
		No	Replace condenser, or repair and clean condenser fins, then go to step 19.
7	Are refrigerant's high-pressure and low-pressure values low?	Yes	Go to next step.
		No	Go to step 13.
8	Immediately after A/C compressor operates, does refrigerant's high-pressure value momentarily rise to correct value, then fall and stay below it? (Is there negative pressure on low-pressure side?)	Yes	Go to next step.
		No	Go to step 11.
9	Turn A/C switch off and let air conditioner stop for **10 minutes**. Start engine. Turn both A/C switch and fan switch on. Does malfunction occur after A/C compressor turns on?	Yes	Go to next step.
		No	Replace receiver/drier, then go to step 19. (Since water has intermixed in receiver/drier, replacement is necessary.)
10	Is expansion valve heat-sensing tube within cooling unit securely installed proper position?	Yes	Replace expansion valve, then go to step 19. (Since valve closes too much, replacement is necessary.)
		No	Install heat-sensing tube securely in proper position, then go to step 19.

STEP	INSPECTION		ACTION
11	Inspect refrigerant lines. • Is piping free of damage and cracks? • Are piping connections free of oil grime? (Visual inspection) • Are piping connections free of gas leakage? (Inspect using gas leak tester.) Are above items okay?	Yes	Adjust both compressor oil and refrigerant to specified amount, then go to step 19.
		No	If piping is damaged or cracked, replace it, then go to step 19. If there is no damage, go to next step.
12	Are piping connections loose?	Yes	Tighten connections to specified torque, adjust both compressor oil and refrigerant to specified amount, then go to step 19.
		No	Replace O-ring on piping, adjust both compressor oil and refrigerant to specified amount, then go to step 19.
13	Does refrigerant's high-pressure value hardly increase?	Yes	Go to next step. (Pressure hardly increases.)
		No	Go to step 16.
14	When engine is racing, does high-pressure value increase?	Yes	Return to step 4.
		No	Go to next step.
15	After compressor oil is replenished to specified amount, does high-pressure value increase?	Yes	Troubleshooting completed. (Explain to customer that cause was insufficient compressor oil.)
		No	Replace A/C compressor, then go to step 19. (Cause is defective A/C compressor.)
16	Is only refrigerant low-pressure value high?	Yes	Go to step 18.
		No	Go to next step.
17	Are heater unit's air mix links, air mix cranks and air mix rods securely and properly installed?	Yes	Adjust compressor oil to specified amount, then go to step 19. (Cause is excessive amount of compressor oil.)
		No	Repair or install links, cranks and rods securely in proper position, then go to step 19.
18	Is expansion valve heat-sensing tube within cooling unit securely installed in proper position?	Yes	Replace expansion valve, then go to next step. (Since valve opens too much, replacement is necessary.)
		No	Install heat-sensing tube securely in proper position, then go to next step.
19	Is cool air discharged? (Are results of refrigerant system performance test okay?)	Yes	Troubleshooting completed. Explain repairs to customer.
		No	Reinspect malfunction symptoms, then repeat from step 1 if malfunction reoccurs.

7	No cool air.

TROUBLESHOOTING HINTS

① A/C switch indicator light malfunction
Steps 4–6
② Thermoswitch, A/C switch malfunction
Steps 14, 15
③ PCM (A/C signal) system malfunction
Steps 16–18
④ Refrigerant pressure switch, refrigerant system malfunction
Steps 19, 20
⑤ PCM (IG1 signal) system malfunction
Steps 21
⑥ PCM A/C cut-off control system malfunction
Step 22
⑦ Coolant system malfunction
Step 23, 24
⑧ A/C compressor system malfunction
Steps 25, 26
⑨ A/C relay system malfunction
Steps 25–27

STEP	INSPECTION		ACTION
1	Is air discharged?	Yes	Go to next step.
		No	Go to step 1 of troubleshooting indexes No. 1, 2.
2	Start engine. Turn both A/C switch and fan switch on. Does A/C compressor operate?	Yes	Go to next step.
		No	Go to step 4.
3	Is vent air temperature **6 °C {43 °F} or less**?	Yes	Operation is normal. (To prevent evaporator within cooling unit from freezing, A/C compressor stops right away when ambient air temperature is **6 °C {43 °F} or less**.
		No	Go to step 1 of troubleshooting index No. 6.
4	Does A/C switch indicator light illuminate?	Yes	Go to step 7.
		No	Go to next step.
*5	Turn ignition switch to ON. Measure voltage at A/C switch terminal C (IG2 signal). Is voltage **approximately 12 V**?	Yes	Go to next step.
		No	Repair wiring harness between A/C 10 A fuse and A/C switch, then go to step 28.
*6	Turn both A/C switch and fan switch off. Measure voltage at A/C switch terminal A (A/C signal). Is voltage **approximately 12 V**?	Yes	Inspect A/C switch, then go to step 28.
		No	Repair wiring harness between A/C switch and fan switch, then go to step 28.
*7	Turn ignition switch to LOCK. Disconnect refrigerant pressure switch connector. Turn ignition switch to ON. Set fan switch at first speed. Measure voltage at following terminal of refrigerant pressure switch connector (on wiring harness side). • Terminal B (A/C signal) Is voltage **approximately 12 V** when A/C switch is off and **0 V** when it is on?	Yes	Go to step 14.
		No	Go to next step.
*8	Turn A/C switch off. Measure voltage at thermoswitch connector terminal C (IG2 signal). Is voltage **approximately 12 V**?	Yes	Go to next step.
		No	Repair wiring harness between A/C 10 A fuse and thermoswitch, then go to step 28.
*9	Measure voltage at thermoswitch connector terminal A (A/C signal). Is voltage **approximately 12 V** when A/C switch is off and **0 V** when it is on?	Yes	Repair wiring harness between refrigerant pressure switch and thermoswitch, then go to step 28.
		No	Go to next step.

STEP	INSPECTION		ACTION
10	Turn ignition switch to LOCK. Disconnect thermoswitch connector. Inspect for continuity at following terminal between thermoswitch connector (on wiring harness side) and ground. • Terminal A (A/C signal) Is there continuity?	Yes	Repair wiring harness between refrigerant pressure switch and thermoswitch, then go to step 28.
		No	Go to next step.
*11	Inspect thermoswitch. Is it okay?	Yes	Go to next step.
		No	Replace thermoswitch, then go to next step.
*12	Turn A/C switch on. Turn fan switch off. Measure voltage at A/C switch connector terminal B (A/C signal). Is voltage **approximately 12 V**?	Yes	Repair wiring harness between thermoswitch and A/C switch, then go to step 28.
		No	Go to next step.
13	Turn ignition switch to LOCK. Disconnect A/C switch connector. Inspect for continuity at following terminal between A/C switch connector (on wiring harness side) and ground. • Terminal B (A/C signal) Is there continuity?	Yes	Repair wiring harness between thermoswitch and A/C switch, then go to step 28.
		No	Replace A/C switch, then go to step 28.
*14	Measure voltage at refrigerant pressure switch connector (on wiring harness side) terminal A (A/C signal). Is voltage **approximately 12 V**?	Yes	Go to step 16.
		No	Go to next step.
*15	Measure voltage at PCM connector (22-pin) terminal 1P (A/C signal). Is voltage **approximately 12 V**?	Yes	Repair wiring harness between PCM and refrigerant pressure switch, then go to step 28.
		No	Replace PCM, then go to step 28.
16	When refrigerant pressure switch connector terminals A and B (on wiring harness side) are shorted, is cool air discharged?	Yes	Go to next step.
		No	Undo short, reconnect refrigerant pressure switch connector, then go to step 19.
17	Inspect refrigerant pressure. ☞ 07–10 REFRIGERANT PRESSURE CHECK Is it okay?	Yes	Undo short, reconnect refrigerant pressure switch connector, then go to step 19.
		No	Go to next step.
18	Inspect refrigerant amount. ☞ 07–10 REFRIGERANT CHARGE CHECK Is it okay?	Yes	Inspect refrigerant pressure switch, then go to step 28.
		No	Adjust refrigerant to specified level, then go to step 28.
*19	Does magnetic clutch operate when terminal B (IG1 signal) of A/C relay connector is grounded?	Yes	Undo short, then go to next step.
		No	Go to step 23.
*20	Turn A/C switch off. Measure voltage at PCM connector (22-pin) terminal 1S (IG1 signal). Is voltage **approximately 12 V**?	Yes	Go to next step.
		No	Repair wiring harness between A/C relay and PCM, then go to step 28.
*21	Inspect input signal components (crankshaft position sensor, engine coolant temperature sensor, power steering pressure switch, throttle position sensor, neutral switch (MT), transaxle range switch (AT), including wiring harness of PCM (A/C cut-off control). Are they okay?	Yes	Go to next step.
		No	Replace input signal components, then go to step 28.
22	Is coolant system operating properly? ☞ 01–01A ENGINE SYSTEM INSPECTION, Cooling Fan Control Inspection	Yes	Replace PCM, then go to step 28.
		No	Inspect for cause.
*23	Measure voltage at magnetic clutch's thermal protector terminal A (A/C control signal). Is voltage **approximately 12 V**?	Yes	Go to next step.
		No	Go to step 25.

STEP	INSPECTION		ACTION
*24	Inspect magnetic clutch. ☞ 07–40 MAGNETIC CLUTCH INSPECTION Is it okay?	Yes	Replace thermal protector, then go to step 28.
		No	Replace magnetic clutch stator, then go to step 28.
25	Inspect the following fuses: • A/C 10 A fuse • FAN 30 A fuse Are they okay?	Yes	Go to next step.
		No	Replace fuse, then go to step 28. If fuse burns out right away, go to next step.
*26	Measure voltage at following A/C relay terminals: • Terminal A (IG1 signal) • Terminal C (A/C control signal) Is voltage **approximately 12 V**?	Yes	Go to next step.
		No	Repair wiring harness between A/C 10 A fuse or FAN 30 A fuse and A/C relay, then go to step 28.
*27	Measure voltage at A/C relay terminal D (A/C control signal). Is voltage **approximately 12 V**?	Yes	Repair wiring harness between A/C relay and thermal protector, then go to next step.
		No	Replace A/C relay, then go to next step.
28	Is cool air discharged? (Is refrigerant system performance test result correct?)	Yes	Troubleshooting completed. Explain repairs to customer.
		No	Reinspect malfunction symptoms, then repeat from step 1 if malfunction reoccurs.

07

8	**Noise while operating A/C system**		
TROUBLESHOOTING HINTS ① Magnetic clutch operation noise Step 4 ② A/C compressor vane noise Steps 5–12 ③ A/C compressor slippage noise Steps 13–16 ④ Hose or refrigerant line interference noise Step 17			
STEP	**INSPECTION**		**ACTION**
1	Is there a jinging, popping, beeping, or buzzing sound (A/C compressor vane noise)?	Yes	Go to step 5.
		No	Go to next step.
2	Is there a squeaking or whirling sound (A/C compressor slippage noise)?	Yes	Go to step 13.
		No	Go to next step.
3	Is there a rattling or vibrating sound (interference noise)?	Yes	Go to step 17.
		No	Go to next step.
4	Is there a clicking sound (magnetic clutch operation noise)?	Yes	Adjust clearance between pressure plate of magnetic clutch and A/C compressor pulley, then go to step 18. ☞ 07–40 MAGNETIC CLUTCH ADJUSTMENT
		No	Condition is normal. (Reinspect malfunction symptoms.)
5	Is noise heard continuously for more than 3 seconds after A/C compressor comes on?	Yes	Go to next step.
		No	Condition is normal. (Noise occurs for **2–3 seconds** immediately after A/C compressor turns on.)
6	Inspect idle speed. ☞ 01–10 ENGINE TUNE-UP, Idle Speed Is it okay?	Yes	Go to next step.
		No	Adjust idle speed, then go to step 18.
7	Inspect refrigerant amount. ☞ 07–10 REFRIGERANT CHARGE CHECK Is it okay?	Yes	Go to step 9.
		No	Go to next step.
8	Inspect refrigerant lines. • Is piping free of damage and cracks? • Are piping connections free of oil grime? (Visual inspection) • Are piping connections free of gas leakage? (Inspect using gas leak tester.) Are above items okay?	Yes	Adjust refrigerant amount to specified level, then go to step 18.
		No	If piping is damaged or cracked, replace then go to step 18. If there is gas leakage, repair or replace connection and replace receiver/drier*, then go to step 18.

STEP	INSPECTION		ACTION
8	Inspect refrigerant lines. • Is piping free of damage and cracks? • Are piping connections free of oil grime? (Visual inspection) • Are piping connections free of gas leakage? (Inspect using gas leak tester.) Are above items okay?	Yes	Adjust refrigerant amount to specified level, then go to step 18.
		No	If piping is damaged or cracked, replace then go to step 18. If there is gas leakage, repair or replace connection and replace receiver/drier*, then go to step 18.
9	Add **20 cc {0.8 fl oz}** of compressor oil. Is noise heard when racing engine?	Yes	Go to next step.
		No	Troubleshooting completed. Explain repair to customer.
10	Drain compressor oil. Is it contaminated with metal particles?	Yes	Go to next step.
		No	Replace A/C compressor, then go to step 18.
11	Is compressor oil whitish and mixed with water?	Yes	Replace entire A/C system (excluding heater), then go to step 18.
		No	Go to next step.
12	Is compressor oil darker than normal and contaminated with aluminum chips?	Yes	Replace A/C compressor and receiver/drier, then go to step 18. (Since A/C compressor may be worn and receiver/drier may be clogged, replacement of receiver/drier is necessary.)
		No	Condition is normal. Reinspect malfunction symptoms.
13	Is noise heard immediately after A/C compressor is stopped?	Yes	Replace A/C compressor, then go to step 18. (A/C compressor discharge valve left open.)
		No	Go to next step.
14	Inspect drive belt. ☞ 01–10 DRIVE BELT INSPECTION Is it okay?	Yes	Go to next step.
		No	Adjust or replace drive belt, then go to step 18.
15	Is drive belt worn? Does it have foreign material imbedded in it, or have oil on it?	Yes	Remove obstruction, remove oil, or replace drive belt, then go to step 18.
		No	Go to next step.
16	Inspect magnetic clutch. ☞ 07–40 MAGNETIC CLUTCH INSPECTION Is it okay?	Yes	Replace A/C compressor (excluding pressure plate, A/C compressor pulley, and stator), then go to step 18.
		No	Replace magnetic clutch, then go to step 18.
17	Is noise emitted from A/C compressor?	Yes	Visually inspect A/C compressor, replace appropriate parts if necessary, then go to next step.
		No	If noise is due to refrigerant lines, repair detached or missing clips, tighten loose bolts, then go to next step.
18	Has A/C compressor noise stopped?	Yes	Troubleshooting completed. Explain repairs to customer.
		No	Reinspect malfunction symptoms, then repeat from step 1 if malfunction reoccurs.

* : If there is gas leakage, air enters into the A/C system and the desiccant within the receiver/drier absorbs the moisture from it and becomes saturated. If the A/C system is used in this condition, the inside of the A/C compressor will begin to rust due to this moisture, which may cause lock up or noise to occur. Therefore, replacement of the receiver/drier is necessary.

07–10 REFRIGERANT SYSTEM

REFRIGERANT SYSTEM SERVICE WARNINGS

U5U71CAA

Using/Handling Unapproved Refrigerant

- **Using a flammable refrigerant, such as OZ-12, in this vehicle is dangerous. In an accident, the refrigerant may catch fire, resulting in serious injury or death. When servicing this vehicle, use only R-134a.**
- **Checking for system leaks on a vehicle that has been serviced with flammable refrigerant, such as OZ-12, is dangerous. Conventional leak detectors use an electronically generated arc which can ignite the refrigerant, causing serious injury or death. If a flammable refrigerant may have been used to service the system, or if you suspect a flammable refrigerant has been used, contact the local fire marshall or EPA office for information on handling the refrigerant.**

Storing Refrigerant

- **The refrigerant container is highly pressurized. If it is subjected to high heat, it could explode, scattering metal fragments and liquid refrigerant that can seriously injure you. Store the refrigerant at temperatures below 40 °C {104 °F}.**
- **Do not allow the refrigerant to leak near fire or any kind of heat. A poisonous gas may be generated if the refrigerant gas contacts fire or heat such as from cigarettes and heaters. When carrying out any operation that can cause refrigerant leakage, extinguish or remove the above-mentioned heat sources and maintain adequate ventilation.**

Handling Refrigerant

- **Handling liquid refrigerant is dangerous. A drop of it on the skin can result in localized frostbite. When handling the refrigerant, wear gloves and safety goggles. If refrigerant splashes into the eyes, immediately wash them with clean water and consult a doctor.**

REFRIGERANT SYSTEM SERVICE CAUTIONS

X5U71CW01

Compressor Oil

- **Use only DENSO OIL9 compressor oil for this vehicle. Using PAG oil other than DENSO OIL9 compressor oil can damage the A/C compressor.**
- **Do not spill DENSO OIL9 compressor oil on the vehicle. A drop of compressor oil on the vehicle surface can eat away at the paint. If oil gets on the vehicle, wipe it off immediately.**
- **PAG oil has a higher moisture absorption efficiency than the previously used mineral oil. If moisture mixes with the compressor oil, the refrigerant system could be damaged. Therefore, install caps immediately after using the compressor oil or removing refrigerant system parts to prevent moisture absorption.**

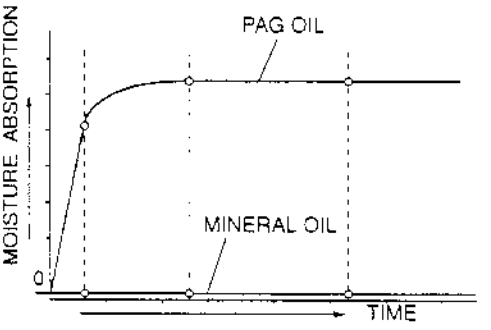

U5U71001

REFRIGERANT SYSTEM GENERAL PROCEDURES

X5U710W02

Manifold Gauge Set Installation

1. Fully close the valves of the manifold gauge.
2. Connect charging hoses to the high- and low-pressure side joints of the manifold gauge.
3. Connect quick couplers to the ends of the charging hoses.
4. Remove the caps from the high- and low-pressure side charging valves.
5. Connect the quick couplers to the charging valves.

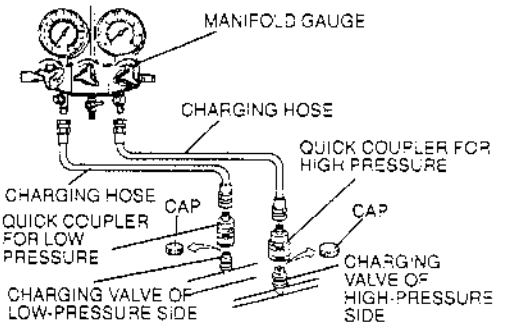

REFRIGERANT SYSTEM PERFORMANCE TEST

X5U710W03

Note

- After servicing the refrigerant system, test its performance.

1. Install the manifold gauge set. (Refer to 07–10 REFRIGERANT SYSTEM GENERAL PROCEDURES, Manifold Gauge Set Installation.)
2. Open the hood.
3. Close all the doors and all the windows.
4. Warm up the engine and run it at a constant **1,500 rpm**.
5. Turn the A/C switch on.
6. Set the fan switch at 4th.
7. Set the REC/FRESH lever to REC.
8. Set the mode lever to VENT.
9. Set the temperature control lever to MAX COLD.

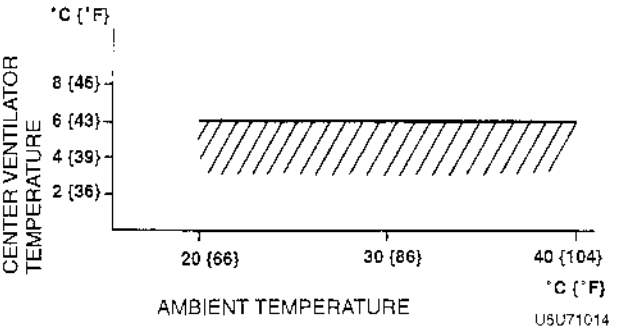

10. Measure the center ventilator temperature and record the temperature reading.
11. Measure the ambient temperature and record the temperature reading.
12. Verify that the temperature reading is in the shaded zone (maximum 6 °C {43 °F}).
13. If the performance is not within the shaded zone, troubleshoot the refrigerant system. (Refer to 07–01 TROUBLESHOOTING.)

REFRIGERANT CHARGE CHECK

X5U710W04

1. Install the manifold gauge set. (Refer to 07–10 REFRIGERANT SYSTEM GENERAL PROCEDURES, Manifold Gauge Set Installation.)
2. Check the refrigerant pressure reading with the engine stopped.
3. Verify that the high- and low-pressure side readings of the manifold gauge are at **493—788 kPa {5.02—8.04 kgf/cm^2, 72—114 psi}**. If the pressure readings are lower than specified, recharge the refrigerant amount. (Refer to 07–10 REFRIGERANT CHARGING.) If the pressure readings are within the specification but there is insufficient cooling, go to the next step. If the pressure readings are within the specification and there are no leaks, the refrigerant amount is OK.
4. Start the engine and run it at a constant **2000 rpm**.
5. Turn the A/C switch on and set the fan switch at 4th.
6. Set the REC/FRESH lever to REC.
7. If the A/C compressor is short-cycling, note the low-pressure side reading at which the magnetic clutch kicks out.
8. If the pressure is **170 kPa {1.7 kgf/cm^2, 24 psi}** or lower, evacuate then recharge the refrigerant system with the proper amount of refrigerant. (Refer to 07–10 REFRIGERANT CHARGING.) If the pressure is **210 kPa {2.1 kgf/cm^2, 30 psi}** or higher, inspect the thermoswitch. (Refer to 07–40 THERMOSWITCH INSPECTION.)

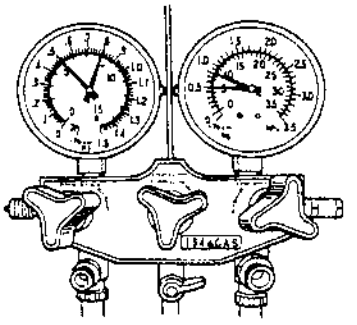

REFRIGERANT PRESSURE CHECK

1. Install the manifold gauge set. (Refer to 07–10 REFRIGERANT SYSTEM GENERAL PROCEDURES, Manifold Gauge Set Installation.)
2. Open the hood.
3. Close all the doors and all the windows.
4. Warm up the engine and run it at a constant **1,500 rpm**.
5. Turn the A/C switch on.
6. Set the fan switch at 4th.
7. Set the REC/FRESH lever to REC.
8. Set the mode lever to VENT.
9. Set the temperature control lever to MAX COLD.
10. Measure the high- and low-pressure side readings of the manifold gauge.
11. If the high- and low-pressure side readings are in the shaded zones shown in the figure, the refrigerant system is normal.

X5U710W05

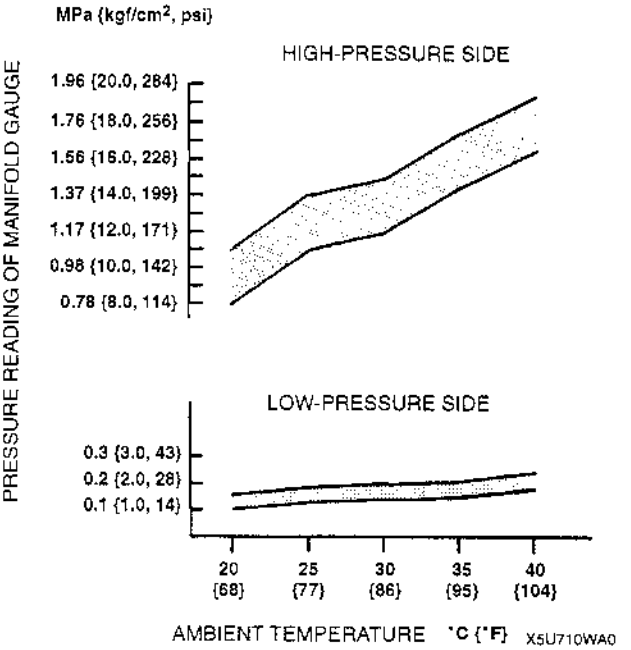

X5U710WA0

12. If the high- and low-pressure side readings are not as specified, troubleshoot the refrigerant system. (Refer to 07–01 TROUBLESHOOTING.)

REFRIGERANT CHARGING

1. Install the manifold gauge set. (Refer to 07–10 REFRIGERANT SYSTEM GENERAL PROCEDURES, Manifold Gauge Set Installation.)
2. Connect the tap pin side of the charging hose to the air purge valve of the manifold gauge.
3. Connect the vacuum pump hose to the center joint of the manifold gauge.
4. Connect the vacuum pump hose to the vacuum pump.
5. Connect the charging hose to the refrigerant tank.
6. Place the refrigerant tank on the scale.

Regular amount of refrigerant
600 g {21.2 oz}

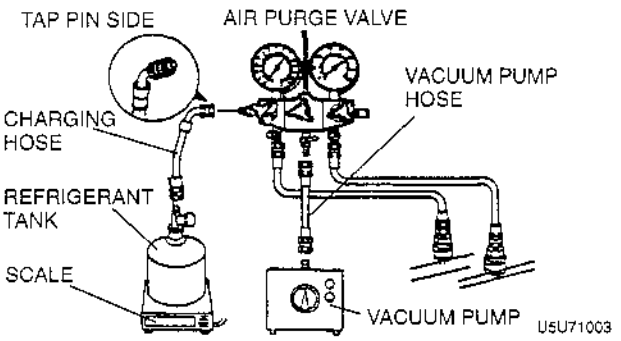

U5U71003

7. Open all the valves of the manifold gauge.
8. Start the vacuum pump and let it operate for **15 minutes**.

X5U710W06

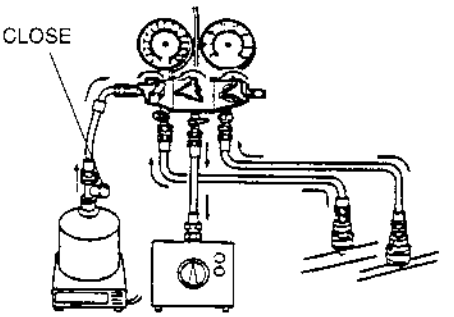

U5U71004

9. Verify that the high- and low-pressure side readings of the manifold gauge are at **–101 kPa {–760 mmHg, –29.9 inHg}**. Close each valve of the manifold gauge.

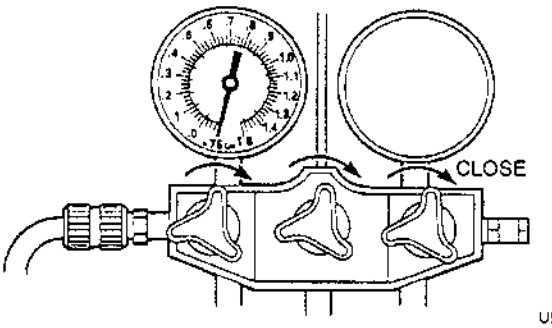

U5U71005

10. Stop the vacuum pump and wait for about **5 minutes**.

11. Check the low-pressure side reading of the manifold gauge. If the reading has changed, check for leaks and then repeat from step 7. If the reading has not changed, go to step 12.
12. Open the valve of the refrigerant tank.
13. Weigh the refrigerant tank.
14. Open the low-pressure side valve of the manifold gauge.

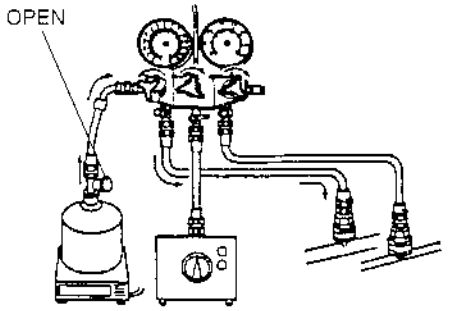

U5U71006

15. When the low-pressure side reading increases to **0.1 MPa {1 kgf/cm^2, 14 psi}**, close the low-pressure side valve of the manifold gauge.

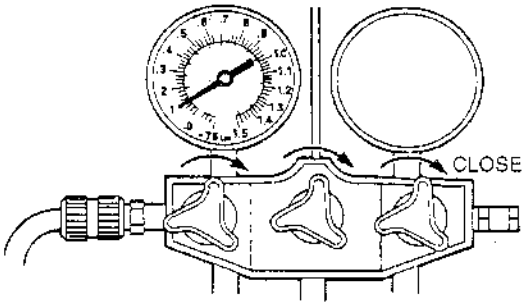

U5U71007

16. Check for leaks from the cooler pipe/hose connections by using a gas leak tester. If there are no leaks, go to step 17. If a leak is found at a loose joint, tighten the joint and check for leaks again. If there is still a leak at the same joint, discharge the refrigerant and then repair the joint. Repeat the charging procedure from step 7. If there are no leaks after tightening the joint, go to step 17.
17. Open the low-pressure side valve of the manifold gauge and charge with refrigerant until the weight of the refrigerant tank has decreased 300 g {10.6 oz} from the amount in step 13.

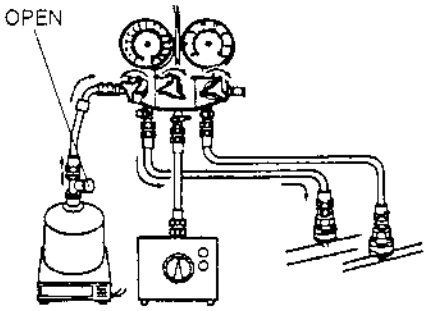

U5U71008

18. Close the low-pressure side valve of the manifold gauge.

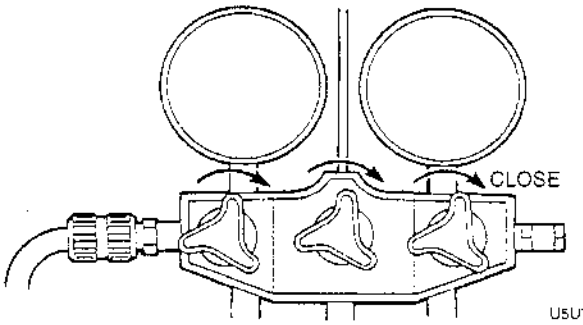

U5U71009

Warning

- **Running the engine with the high-pressure side valve open is dangerous. Pressure within the service cans will increase and the cans could explode, scattering metal fragments and liquid refrigerant that can seriously injure you. Therefore, do not open the high-pressure side valve while the engine is running.**

19. Start the engine and actuate the A/C compressor.
20. Open the low-pressure side valve of the manifold gauge and charge with refrigerant until the weight of the refrigerant tank has decreased 600 g {21.2 oz} from the amount in step 13.

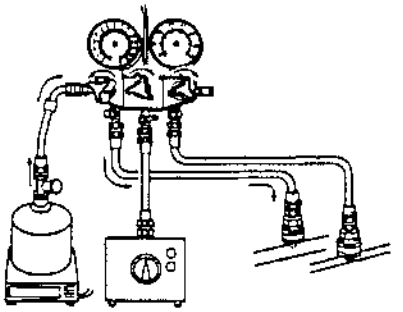

U5U71010

21. Close the low-pressure side valve of the manifold gauge.
22. Stop the engine and A/C compressor.

23. Check for leaks by using a gas leak tester. If there are no leaks, go to step 24. If a leak is found at a loose joint, tighten the joint and check for leaks again. If there is still a leak at the same joint, discharge the refrigerant and then repair the joint. Repeat the charging procedure from step 7. If there are no leaks after tightening the joint, go to step 24.
24. Disconnect the high- and low-pressure side quick couplers from the charging valves.
25. Install the caps to the charging valves.

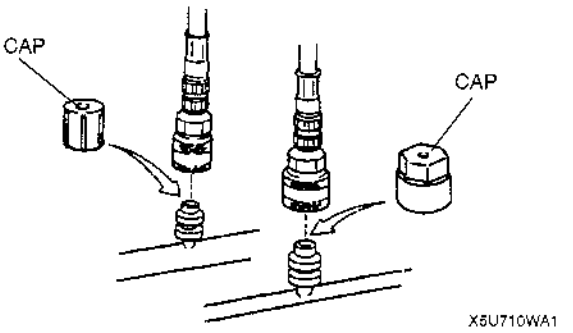

07–11 BASIC SYSTEM

BASIC SYSTEM STRUCTURAL VIEW

X5U711WC

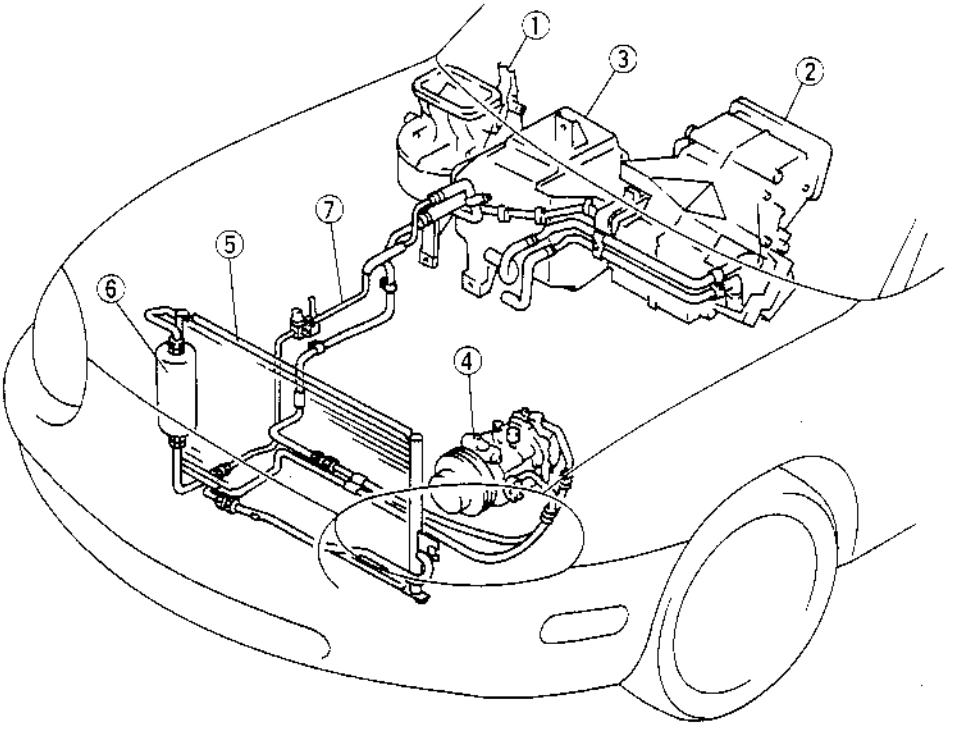

X5U711WA0

1	Blower unit
2	Heater unit
3	Cooling unit
4	A/C compressor

5	Condenser
6	Receiver/drier
7	Refrigerant lines

BLOWER UNIT REMOVAL/INSTALLATION

X5U711W02

1. Disconnect the negative battery cable.
2. Remove the glove compartment.
3. Remove the bracket.

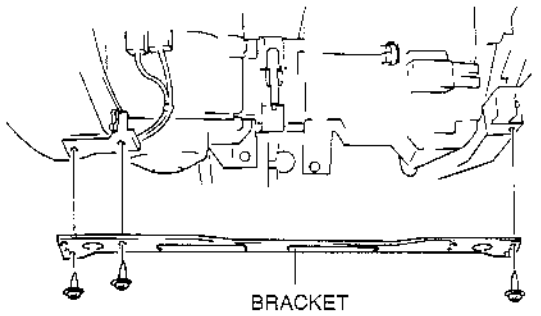

X5U711WA1

4. Remove the seal plate.

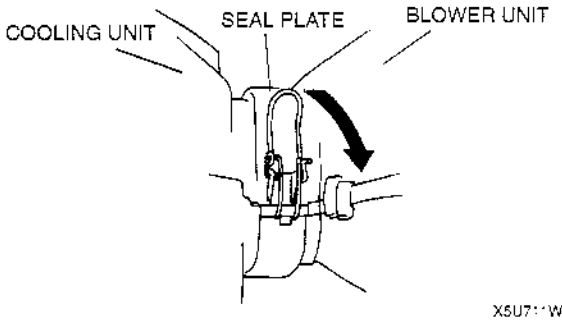

X5U711WA2

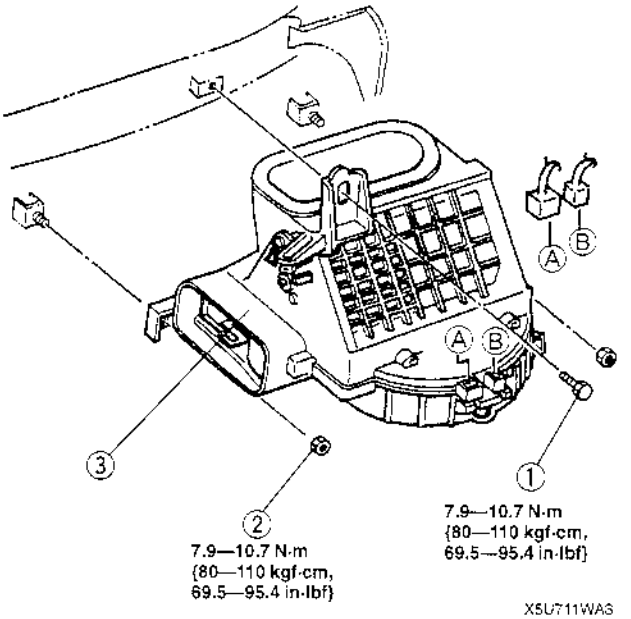

X5U711WA3

1	Bolt
2	Nut
3	Blower unit

5. Remove in the order indicated in the table.
6. Install in the reverse order of removal.

BLOWER UNIT DISASSEMBLY/ASSEMBLY

X5U711W03

1. Disassemble in the order indicated in the table.
2. Assemble in the reverse order of disassembly.

1	Resistor
2	Blower motor
3	Air intake link
4	Case (bottom)
5	Air guider
6	Air intake door
7	Case (top)

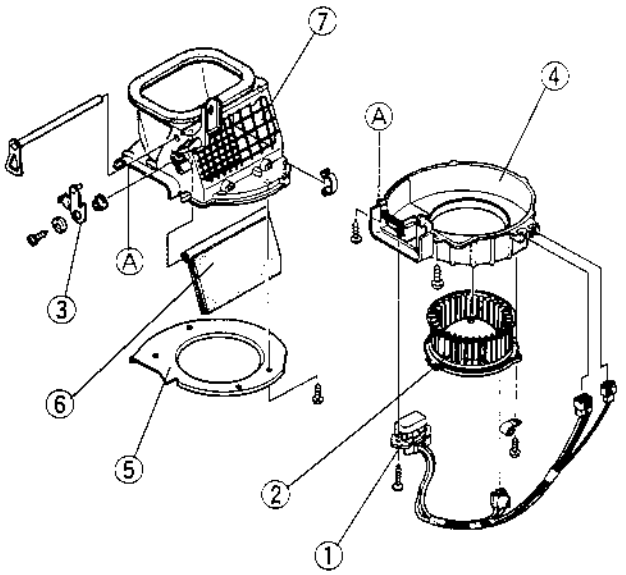

U5U71103

COOLING UNIT REMOVAL/INSTALLATION

X5U711W07

1. Discharge the refrigerant from the system.
2. Disconnect the negative battery cable.
3. Remove the glove compartment.

Caution

- **If moisture or foreign material enters the refrigeration cycle, cooling ability will be lowered and abnormal noise will occur. Always immediately plug all open fittings after removing any refrigeration cycle parts to keep moisture or foreign material out of the cycle.**

4. Remove in the order indicated in the table. Do not allow compressor oil to spill.
5. Install in the reverse order of removal.
6. Recharge with refrigerant. (Refer to 07–10 REFRIGERANT CHARGING.)
7. Perform refrigerant system performance test. (Refer to 07–10 PERFORMANCE TEST.)

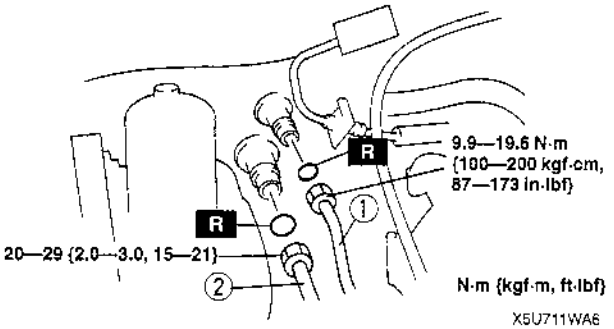

1	Cooler pipe No.1 ☞ 07–11 REFRIGERANT LINES REMOVAL/INSTALLATION, Refrigerant Lines Removal Note ☞ 07–11 REFRIGERANT LINES REMOVAL/INSTALLATION, Refrigerant Lines Installation Note
2	Cooler pipe No.2 ☞ 07–11 REFRIGERANT LINES REMOVAL/INSTALLATION, Refrigerant Lines Removal Note ☞ 07–11 REFRIGERANT LINES REMOVAL/INSTALLATION, Refrigerant Lines Installation Note
3	Seal plate
4	Cooling unit ☞ Installation Note

Cooling Unit Installation Note

- When installing a new cooling unit, add DENSO OIL9 compressor oil into the refrigeration cycle.

Supplemental amount
40 ml {40 cc, 1.4 fl oz}

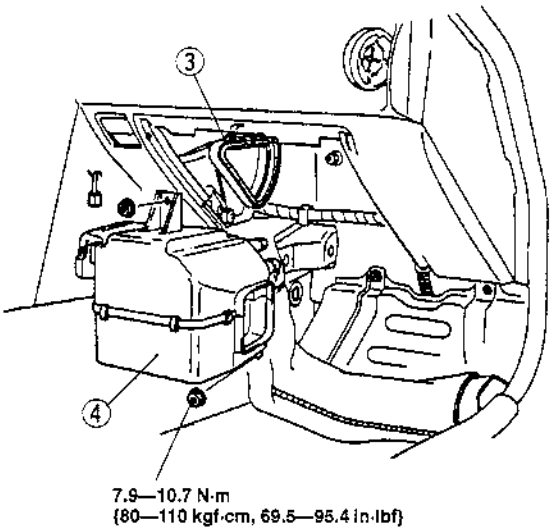

COOLING UNIT DISASSEMBLY/ASSEMBLY

X5U711W08

Caution

- **If moisture of foreign material enters the refrigeration cycle, cooling ability will be lowered and abnormal noise will occur. Always immediately plug all open fittings after removing any refrigeration cycle parts to keep moisture or foreign material out of the cycle.**

1. Disassemble in the order indicated in the table.
2. Assemble in the reverse order of disassembly.

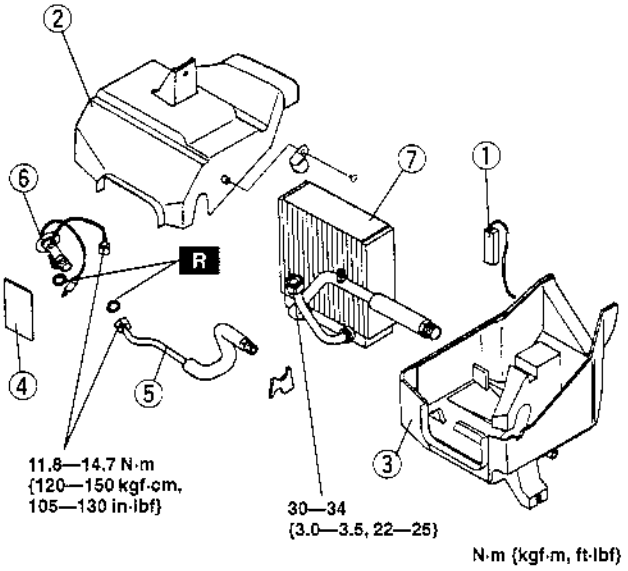

X5U711WA8

1	Thermoswitch ☞ Assembly note
2	Case (top)
3	Case (bottom)
4	Tar patty
5	Pipe
6	Expansion valve ☞ Assembly Note
7	Evaporator ☞ Assembly Note

Evaporator Assembly Note

- When installing a new evaporator, add DENSO OIL9 compressor oil into the refrigeration cycle.

Supplemental amount
40 ml {40 cc, 1.4 fl oz}

Expansion Valve Assembly Note

1. Apply compressor oil to the O-rings and connect the joints.
2. Install the heat-sensing tube to its proper position.

Thermoswitch Assembly Note

- Insert the termoswitch probe in location as shown in the figure.

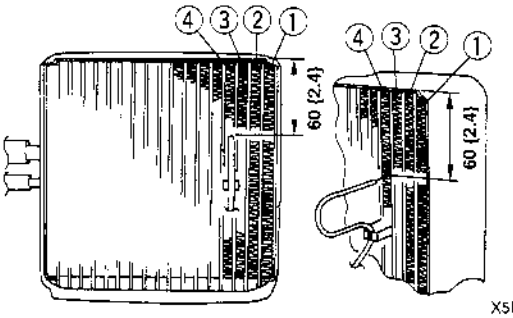

X5U711WA9

EVAPORATOR INSPECTION

X5U711W09

1. Remove the cooling unit. (Refer to 07–11 COOLING UNIT REMOVAL/INSTALLATION.)
2. Remove the evaporator from the cooling unit.
3. Inspect for cracks, damage, and oil leakage. If any are found, replace the evaporator.
4. Inspect for bent fins. If any are bent, use a flathead screwdriver to straighten them.

HEATER UNIT REMOVAL/INSTALLATION

X5U711W04

1. Disconnect the negative battery cable.
2. Drain the engine coolant. (Refer to 01–12 ENGINE COOLANT REPLACEMENT, Draining.)
3. Remove the dashboard. (Refer to 09–17 DASHBOARD REMOVAL/INSTALLATION.)
4. Remove the seal plate.

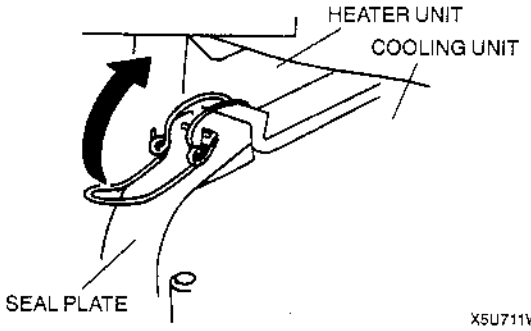

X5U711WA4

5. Remove in the order indicated in the table.
6. Install in the reverse order of removal.
7. Refill the engine coolant. (Refer to 01–12 ENGINE COOLANT REPLACEMENT, Refilling.)

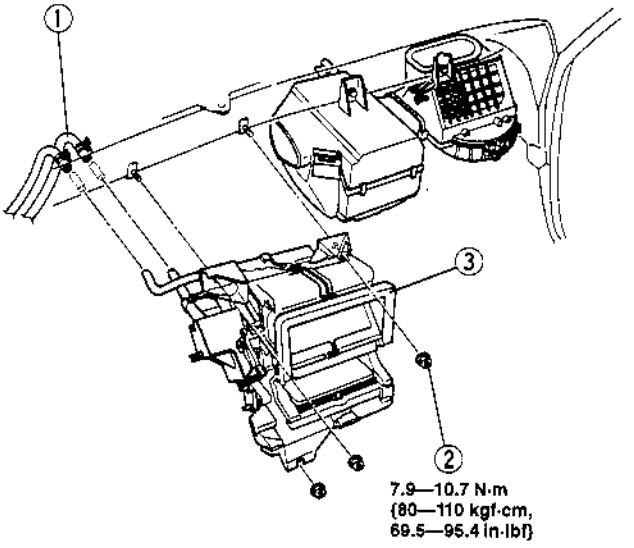

X5U711WAE

1	Heater hose
2	Nut
3	Heater unit

HEATER UNIT DISASSEMBLY/ASSEMBLY

X5U711W05

1. Disassemble in the order indicated in the table.
2. Assemble in the reverse order of disassembly.

1	Cover
2	Heater core
3	Air mix link
4	Airflow mode link
5	Case (RH)
6	Case (LH)
7	Air mix door
8	Airflow mode door

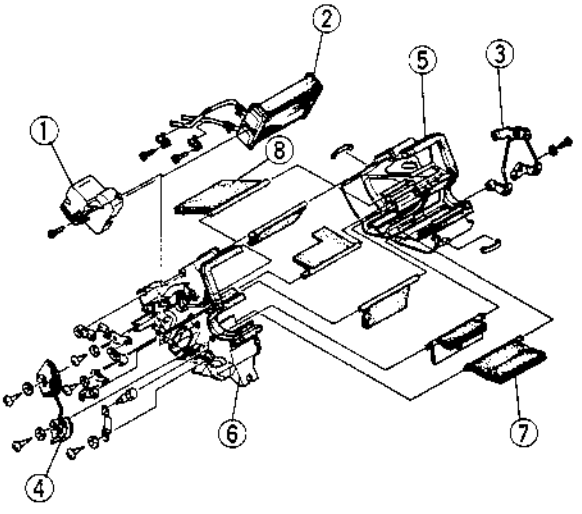

X5U711WA5

HEATER CORE INSPECTION

X5U711W06

1. Remove the heater unit. (Refer to 07–11 HEATER UNIT REMOVAL/INSTALLATION.)
2. Remove the heater core from the heater unit.
3. Inspect for cracks, damage, and coolant leakage. If any are found, replace the heater core.
4. Inspect for bent fins. If any are bent, use a flathead screwdriver to straighten them.
5. Verify that the heater core inlet and outlet are not distorted or damaged. Repair with pliers if necessary.

A/C COMPRESSOR REMOVAL/INSTALLATION

X5U711W10

1. Discharge the refrigerant from the system.
2. Disconnect the negative battery cable.
3. Remove the under cover.
4. Remove the drive belt (P/S+A/C).

Caution

- **If moisture or foreign material enters the refrigeration cycle, cooling ability will be lowered and abnormal noise will occur. Always immediately plug all open fittings after removing any refrigeration cycle parts to keep moisture or foreign material out of the cycle.**

5. Remove in the order indicated in the table. Do not allow compressor oil to spill.
6. Install in the reverse order of removal.
7. Adjust the drive belt (P/S+A/C). (Refer to 01–10 DRIVE BELT ADJUSTMENT.)
8. Recharge with refrigerant. (Refer to 07–10 REFRIGERANT CHARGING.)
9. Perform refrigerant system performance test. (Refer to 07–10 PERFORMANCE TEST.)

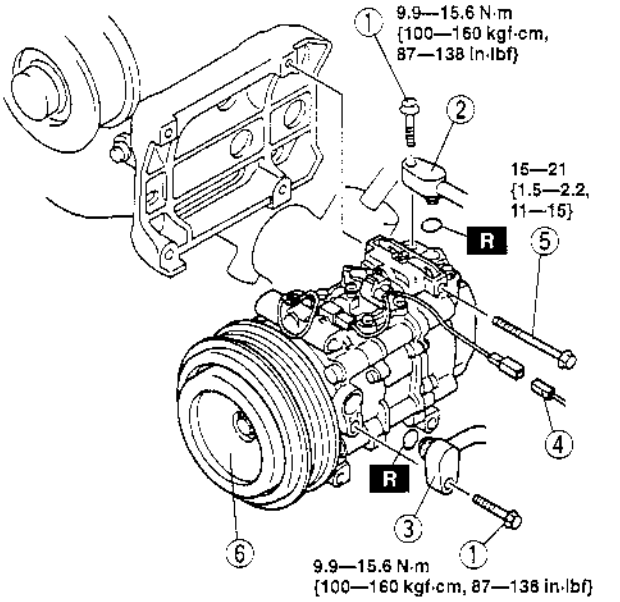

N·m {kgf·m, ft·lbf}

X5U7''WAA

1	Bolt
2	Flexible hose (HI) ☞ 07–11 REFRIGERANT LINES REMOVAL/ INSTALLATION, Refrigerant Lines Removal Note ☞ 07–11 REFRIGERANT LINES REMOVAL/ INSTALLATION, Refrigerant Lines Installation Note
3	Flexible hose (LO) ☞ 07–11 REFRIGERANT LINES REMOVAL/ INSTALLATION, Refrigerant Lines Removal Note ☞ 07–11 REFRIGERANT LINES REMOVAL/ INSTALLATION, Refrigerant Lines Installation Note
4	Connector
5	Bolt
6	A/C compressor ☞ Installation Note

A/C Compressor Installation Note

- Remove the following amount of compressor oil from the new A/C compressor when replacing the A/C compressor.

Compressor oil to the removed
= 200 ml {200 cc, 6.76 fl oz} –
[compressor oil from old A/C compressor
+ 15 ml {15 cc, 0.5 fl oz}]

CONDENSER REMOVAL/INSTALLATION

X5U711W11

1. Discharge the refrigerant from the system.
2. Disconnect the negative battery cable.
3. Remove the cooling fan. (Refer to 01–12 RADIATOR REMOVAL/INSTALLATION.)
4. Remove the condenser fan. (Refer to 07–11 CONDENSER FAN REMOVAL/INSTALLATION.)
5. Remove the radiator brackets.

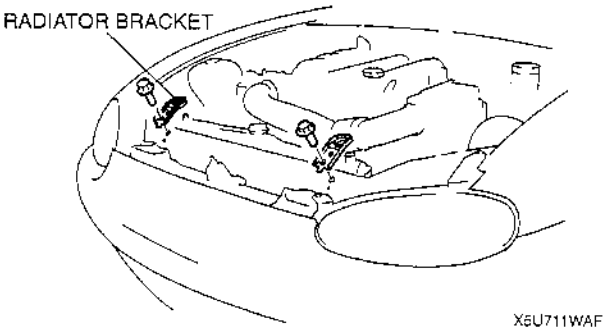

6. Keep pushing the radiator fully backward to remove the condenser.

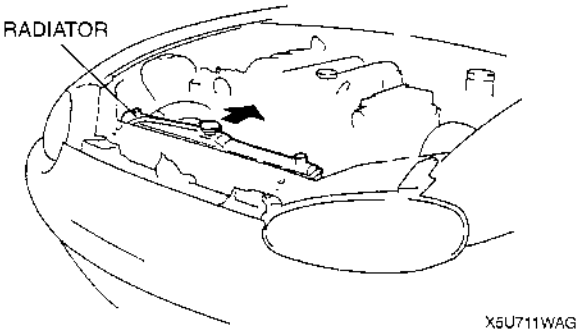

Caution

- **If moisture or foreign material enters the refrigeration cycle, cooling ability will be lowered and abnormal noise will occur. Always immediately plug all open fittings after removing any refrigeration cycle parts to keep moisture or foreign material out of the cycle.**

7. Remove in the order indicated in the table. Do not allow compressor oil to spill.
8. Install in the reverse order of removal.
9. Recharge with refrigerant. (Refer to 07–10 REFRIGERANT CHARGING.)
10. Perform the refrigerant system performance test. (Refer to 07–10 PERFORMANCE TEST.)

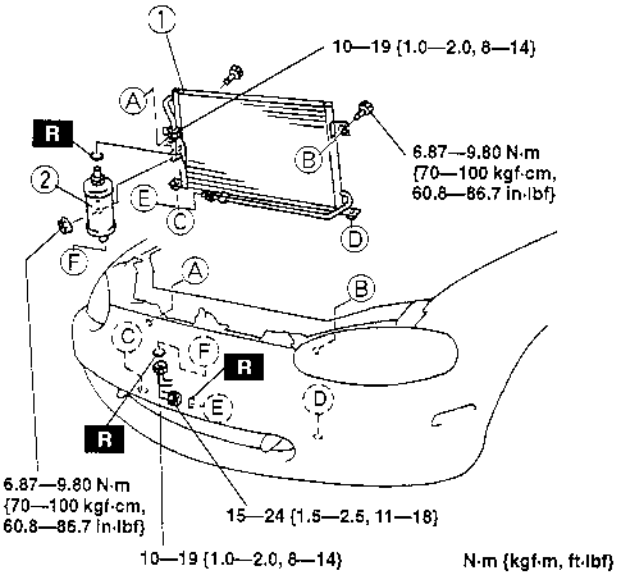

1	Condenser ☞ Installation Note
2	Receiver/drier

Condenser Installation Note

- When installing a new condenser, add DENSO OIL9 compressor oil into the refrigeration cycle.

Supplemental amount
30 ml {30 cc, 1.0 fl oz}

CONDENSER INSPECTION

X5U711W12

1. Inspect for cracks, damage, and oil leakage. If any are found, replace the condenser.
2. Inspect for fins clogged by dust. If any are clogged, remove the dust from the fins.
3. Inspect for bent fins. If any are bent, use a flathead screwdriver to straighten them.

RECEIVER/DRIER REMOVAL/INSTALLATION

1. Discharge the refrigerant from the system.
2. Disconnect the negative battery cable.
3. Remove the condenser. (Refer to 07–11 CONDENSER REMOVAL/INSTALLATION.)

Caution

- **If moisture or foreign material enters the refrigeration cycle, cooling ability will be lowered and abnormal noise will occur. Always immediately plug all open fittings after removing any refrigeration cycle parts to keep moisture or foreign material out of the cycle.**

4. Remove in the order indicated in the table. Do not allow compressor oil to spill.
5. Install in the reverse order of removal.
6. Recharge with refrigerant. (Refer to 07–10 REFRIGERANT CHARGING.)
7. Perform the refrigerant system performance test. (Refer to 07–10 PERFORMANCE TEST.)

X5U711W13

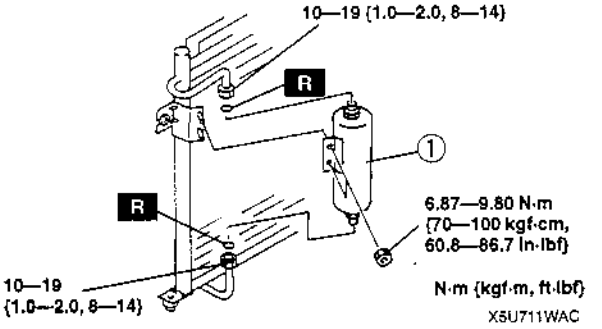

1	Receiver/drier ☞ Installation Note

Receiver/drier Installation Note

- When installing a new receiver/drier, add DENSO OIL9 compressor oil into the refrigeration cycle.

Supplemental amount
10 ml {10 cc, 0.3 fl oz}

REFRIGERANT LINES REMOVAL/INSTALLATION

1. Discharge the refrigerant from the system.
2. Disconnect the negative battery cable.
3. Remove the under cover.

Caution

- **If moisture or foreign material enters the refrigeration cycle, cooling ability will be lowered and abnormal noise will occur. Always immediately plug all open fittings after removing any refrigeration cycle parts to keep moisture or foreign material out of the cycle.**
- **To prevent the pipe from breaking, loosen the joint by using two open-end wrenches.**

4. Remove in the order indicated in the table.
5. Install in the reverse order of removal.
6. Recharge with refrigerant. (Refer to 07–10 REFRIGERANT CHARGING.)
7. Perform the refrigerant system performance test. (Refer to 07–10 PERFORMANCE TEST.)

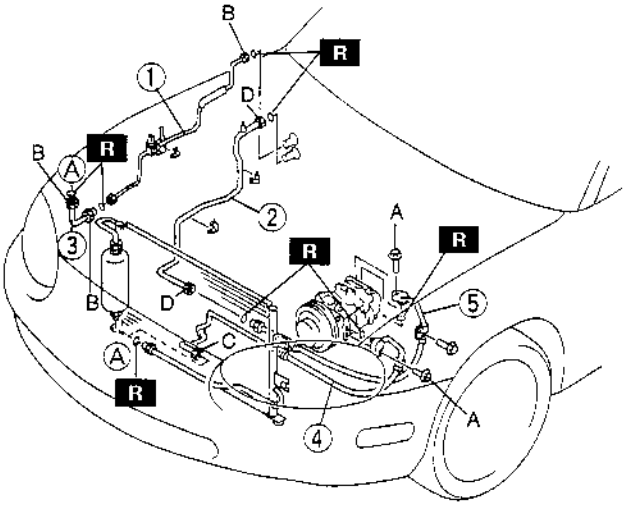

A: 9.9—15.6 N·m {100—160 kgf·cm, 87—138 in·lbf}
B: 9.9—19.6 N·m {100—200 kgf·cm, 87—173 in·lbf}
C: 15—24 N·m {1.5—2.5 kgf·m, 11—18 ft·lbf}
D: 20—29 N·m {2.0—3.0 kgf·m, 15—21 ft·lbf}

X5U711WAD

1	Cooler pipe No.1 ☞ Refrigerant Lines Removal Note ☞ Refrigerant Lines Installation Note
2	Cooler pipe No.2 ☞ Refrigerant Lines Removal Note ☞ Refrigerant Lines Installation Note
3	Cooler pipe No.3 ☞ Refrigerant Lines Removal Note ☞ Refrigerant Lines Installation Note
4	Flexible hose (HI) ☞ Refrigerant Lines Removal Note ☞ Refrigerant Lines Installation Note
5	Flexible hose (LO) ☞ Refrigerant Lines Removal Note ☞ Refrigerant Lines Installation Note

X5U711W14

Refrigerant Lines Removal Note

- Loosen the nut by using 2 wrenches, then remove the cooler pipe or hose.

Refrigerant Lines Installation Note

1. Apply compressor oil to the O-rings and connect the joints.
2. When installing a new cooler hose or pipe add DENSO OIL9 compressor oil into the refrigeration cycle.

   Supplemental amount
   10 ml {10 cc, 0.3 fl oz}

3. Tighten the joints.
   (1) Tighten the nut or bolt of the joint by hand.
   (2) Tighten the joint to the specified torque. If it is a nut joint, tighten the nut by using a spanner and torque wrench.

07–40 CONTROL SYSTEM

CONTROL SYSTEM STRUCTURAL VIEW

X5U740W01

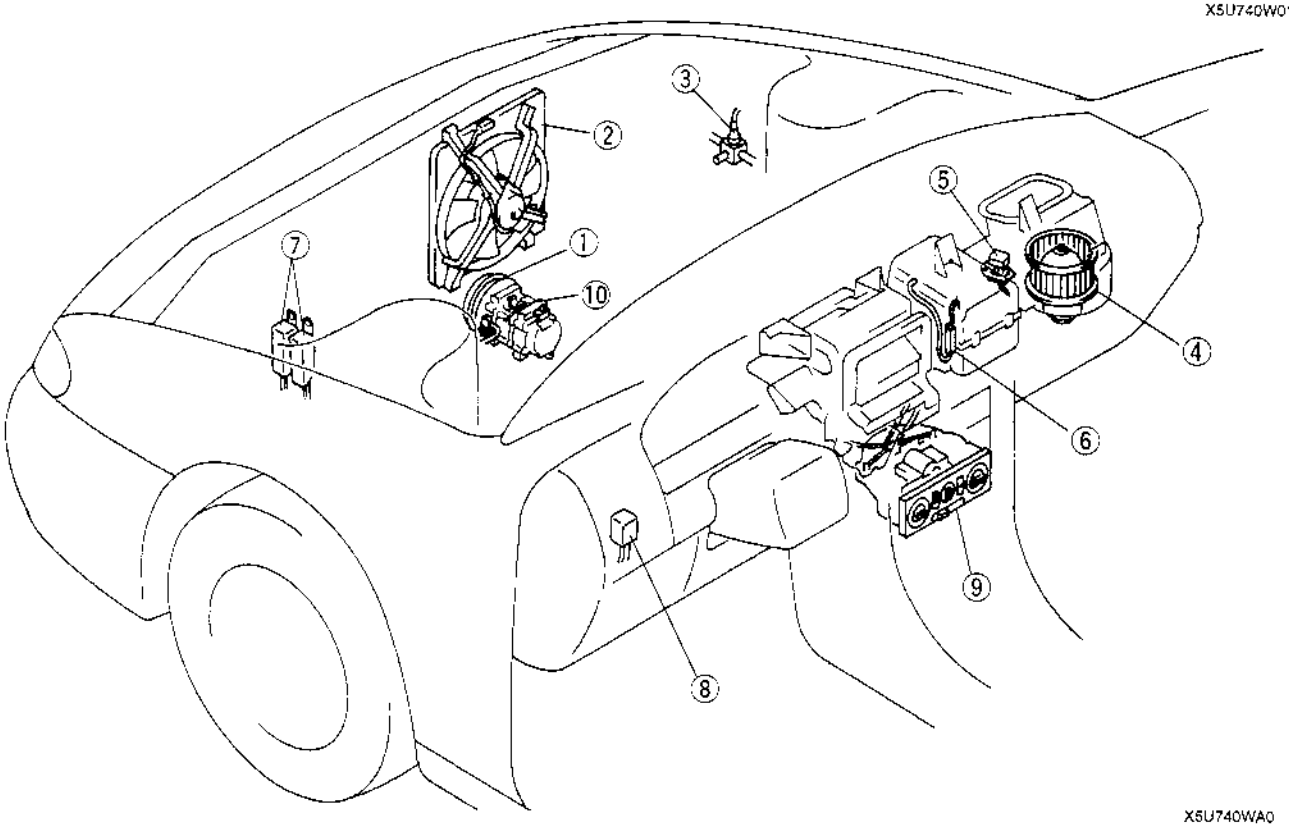

X5U740WA0

1	Magnetic clutch
2	Condenser fan
3	Refrigerant pressure switch
4	Blower motor
5	Resistor

6	Thermoswitch
7	A/C relay and condenser fan relay
8	Blower relay
9	Heater control unit
10	Thermal protector

RESISTOR REMOVAL/INSTALLATION

X5U740W09

1. Disconnect the negative battery cable.
2. Remove as indicated in the table.
3. Install in the reverse order of removal.

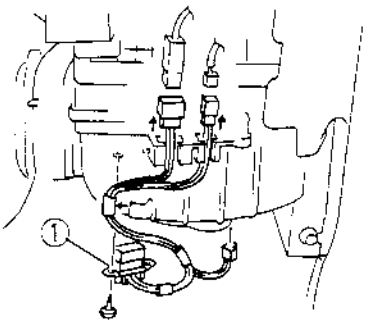

X5U740WA6

1	Resistor

RESISTOR INSPECTION

X5U740W10

1. Disconnect the resistor connectors.
2. Inspect for continuity between the resistor terminals by using an ohmmeter.

○—○ : Continuity ○-W-○ : Resistance

Test condition	Terminal						
	1A	3A	3B	2B	2A	2C	2D
Constant	○—○		○—○-W-○-W-○-W-○ R_1 R_2 R_3				

R_1: 1 Ω R_2: 2.6 Ω R_3: 2 Ω

U5U74010

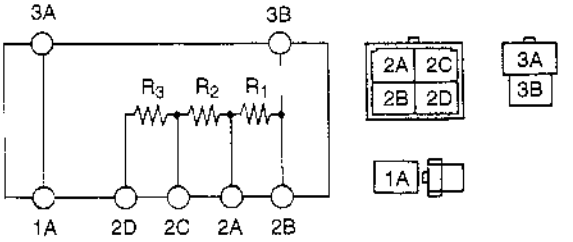

U5U74011

3. If not as specified, replace the resistor.

MAGNETIC CLUTCH INSPECTION

U5U740AC

1. Disconnect the magnetic clutch connector.
2. Connect battery positive voltage to terminal A of the magnetic clutch and ground to A/C compressor body.

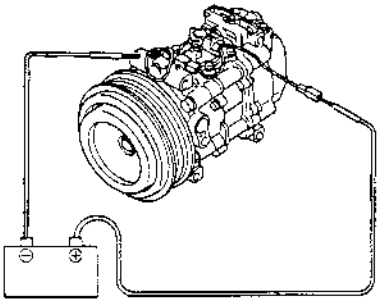

X5U740WA1

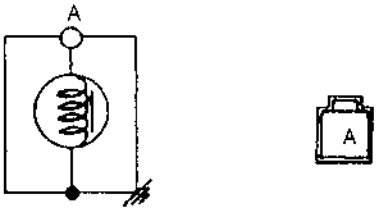

U5U74024

3. Verify that the magnetic clutch operates.
4. If not as specified, replace the stator.

MAGNETIC CLUTCH ADJUSTMENT

- Adjust the clearance by using shims if necessary. Adjusting shims are available in the following thicknesses.

  Adjusting shim size
  0.1 mm {0.004 in}
  0.3 mm {0.012 in}
  0.5 mm {0.020 in}
  Standard clearance
  0.35—0.65 mm {0.014—0.025 in}

U5U740AD

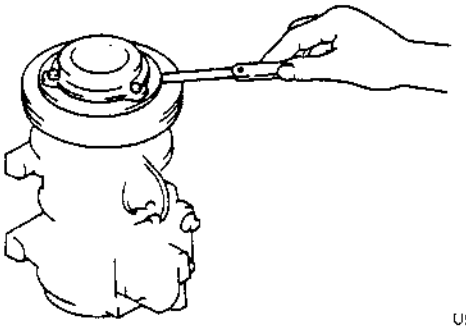

U5U74005

MAGNETIC CLUTCH DISASSEMBLY/ASSEMBLY

1. Remove the A/C compressor. (Refer to 07–11 A/C COMPRESSOR REMOVAL/INSTALLATION.)
2. Disassemble in the order indicated in the table.
3. Assemble in the reverse order of disassembly.
4. Adjust the magnetic clutch clearance. (Refer to 07–40 MAGNETIC CLUTCH ADJUSTMENT.)

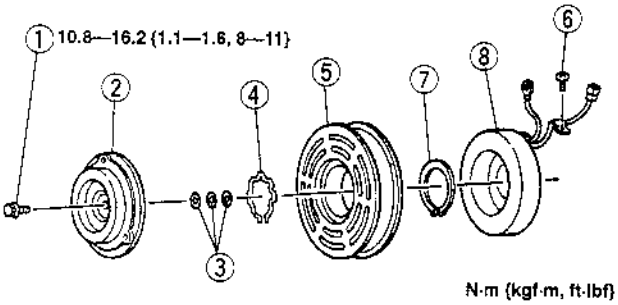

N·m {kgf·m, ft·lbf}

U5U74002

1	Bolt ☞ Disassembly Note
2	Pressure plate ☞ Disassembly Note
3	Shim
4	Snap ring
5	A/C compressor pulley
6	Screw
7	Snap ring
8	Stator

X5U740W02

Bolt Disassembly Note

- Remove the bolt by using the **SST**.

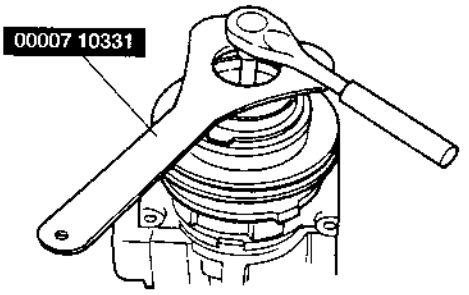

U5U74003

Pressure Plate Disassembly Note

- Remove the pressure plate by using the **SST**.

U5U74004

CONDENSER FAN INSPECTION

X5U740W04

1. Disconnect the condenser fan connector.
2. Connect battery positive voltage to terminal A and ground to terminal B of the condenser fan, and verify that air blows towards the engine.
3. If the condenser fan does not operate, replace the condenser fan.

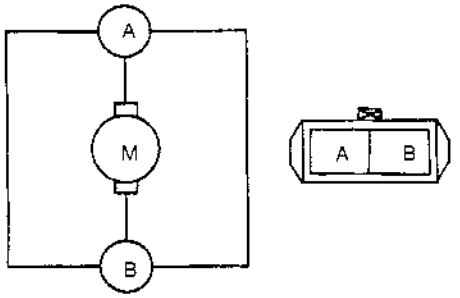

U5U74007

CONDENSER FAN REMOVAL/INSTALLATION

X5U740W03

1. Disconnect the negative battery cable.
2. Loosen the lower installation bolt of condenser fan.
3. Remove in the order indicated in the table.
4. Install in the reverse order of removal.

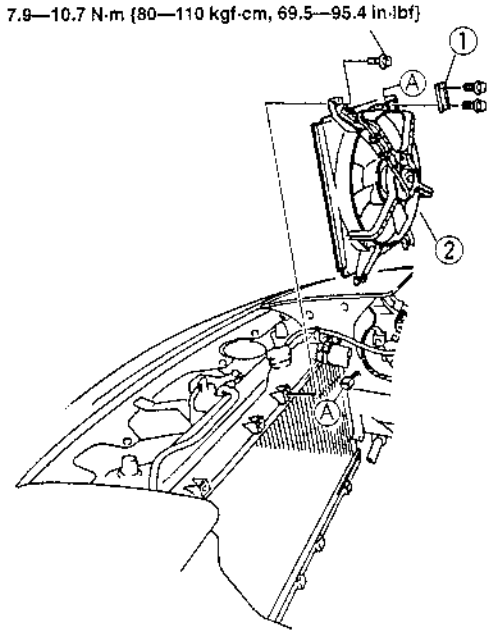

X5U740WA2

1	Bracket
2	Condenser fan

BLOWER MOTOR INSPECTION

X5U740W08

1. Disconnect the blower motor connector.
2. Connect battery positive voltage to terminal A and ground to terminal B of the blower motor, and verify its operation.
3. If the blower motor does not operate, replace the blower motor.

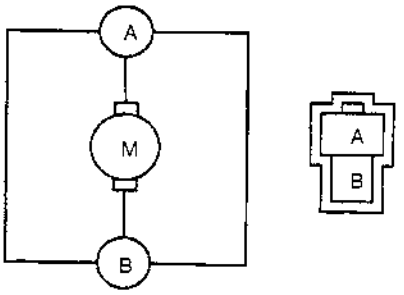

U5U74009

BLOWER MOTOR REMOVAL/INSTALLATION

X5U740W07

1. Disconnect the negative battery cable.
2. Remove the bracket.
3. Remove as indicated in the table.
4. Install in the reverse order of removal.

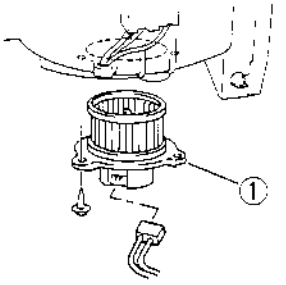

X5U740WA5

1	Blower motor

REFRIGERANT PRESSURE SWITCH INSPECTION

X5U740W06

1. Install the manifold gauge set. (Refer to 07–10 MANIFOLD GAUGE SET INSTALLATION.)
2. Disconnect the refrigerant pressure switch connector.
3. Verify the high-pressure side reading of the manifold gauge.
4. Inspect for continuity between the terminals of the refrigerant pressure switch.

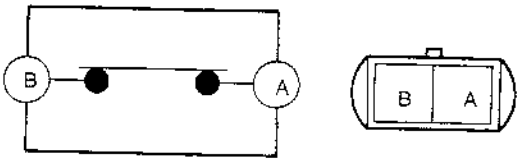

X5U740WA4

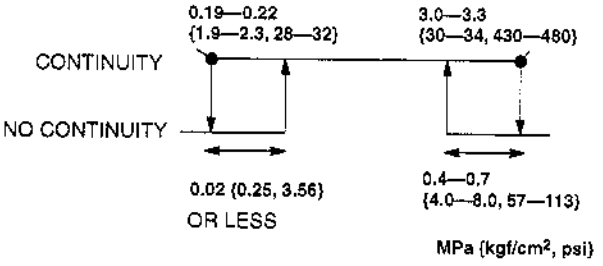

U5U74008

5. If not as specified, replace the refrigerant pressure switch.

REFRIGERANT PRESSURE SWITCH REMOVAL/INSTALLATION

X5U740W05

1. Discharge the refrigerant from the system. (Refer to 07–10 CHARGING.)
2. Disconnect the negative battery cable.

Caution

- **If moisture or foreign material enters the refrigeration cycle, cooling ability will be lowered and abnormal noise will occur. Always immediately plug all open fittings after removing any refrigeration cycle parts to keep moisture or foreign material out of the cycle.**

3. Remove as indicated in the table.
4. Install in the reverse order of removal.
5. Perform the refrigerant system performance test. (Refer to 07–10 PERFORMANCE TEST.)

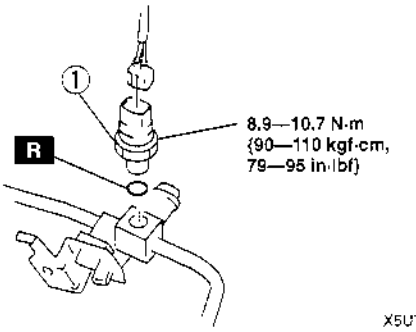

X5U740WA3

1	Refrigerant pressure switch ☞ Installation Note

Refrigerant Pressure Switch Installation Note

- Apply compressor oil to the O-ring and connect the joint.

THERMOSWITCH INSPECTION

X5U740W11

To Determine If The Switch Is Functioning

1. Remove the glove compartment.
2. Start the engine.
3. Turn the A/C switch on.
4. Turn the fan switch on.
5. Connect the positive (+) and negative (–) probes of the voltmeter to terminal A and terminal B of the thermoswitch respectively. (The wiring harness connector must be connected to the thermoswitch connector.)
6. Inspect the voltage as shown below.

○—○ : Continuity

Magnetic clutch	Terminal		Voltage (V)
	A	B	
On	○	○	B+
Off	○	○	0

X5U740WAN

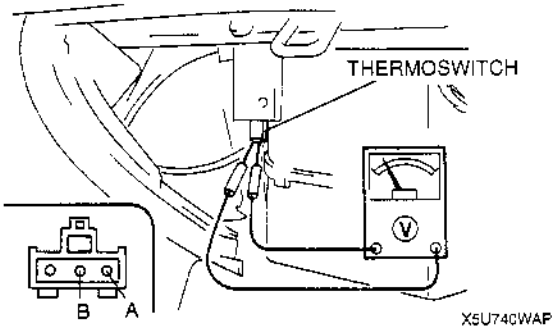

X5U740WAP

7. If not as specified, inspect on/off points of the thermoswitch.

To Inspect On/Off Points Of The Thermoswitch

1. Disconnect the negative battery cable.
2. Remove the cooling unit. (Refer to 07–11 COOLING UNIT REMOVAL/INSTALLATION.)
3. Remove the thermoswitch (Refer to 07–11 COOLING UNIT DISASSEMBLY/ASSEMBLY.)
4. Connect the negative battery cable.
5. Connect the thermoswitch connector to the wiring harness connector.
6. Turn the ignition switch to IG2.
7. Turn the A/C switch on.
8. Turn the fan switch on.
9. Immerse the sensor part of thermoswitch in a container of ice water.
10. Connect the positive (+) and negative (–) probes of the voltmeter to terminal A and terminal B of the thermoswitch respectively.
11. Inspect the voltage as shown below.

○—○ : Continuity

Water temperature	Terminal		Voltage (V)
	A	B	
3.6 °C {38 °F} or more	○	○	B+
0.8 °C {33 °F} or less	○	○	0

X5U740WAQ

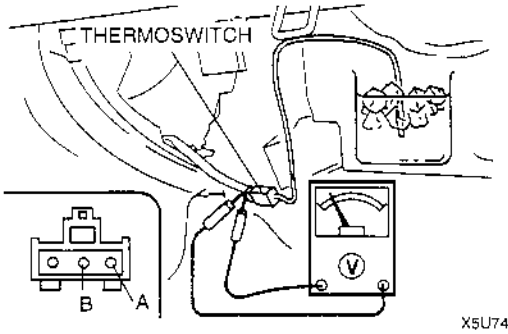

X5U740WAR

12. If not as specified, replace the thermoswitch. (Refer to 07–11 COOLING UNIT DISASSEMBLY/ASSEMBLY.)

HEATER CONTROL UNIT REMOVAL

X5U740W16

1. Disconnect the negative battery cable.
2. Disconnect the air intake wire from the blower unit.
3. Disconnect the air mix wire and airflow mode wire from the heater unit.
4. Remove the hole covers by inserting a small, tape-wrapped, flathead screwdriver into the slot, then carefully prying them off without scratching the center panel. Pry up and pull off the hole covers carefully to prevent the posts from breaking off.

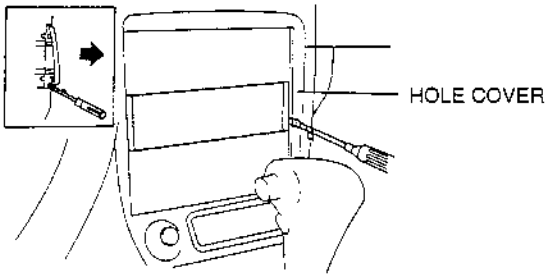

X5U740WAA

5. With the beveled parts of the **SST** facing inward, insert them into the heater control unit.
6. Pull the **SST** outward and rearward to slide out the heater control unit.

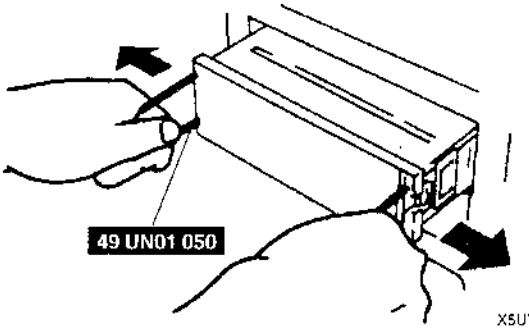

X5U740WAB

7. Disconnect the heater control unit connectors.

HEATER CONTROL UNIT INSTALLATION

X5U740W17

1. Pass each wire through the following routes, then connect them to each unit.

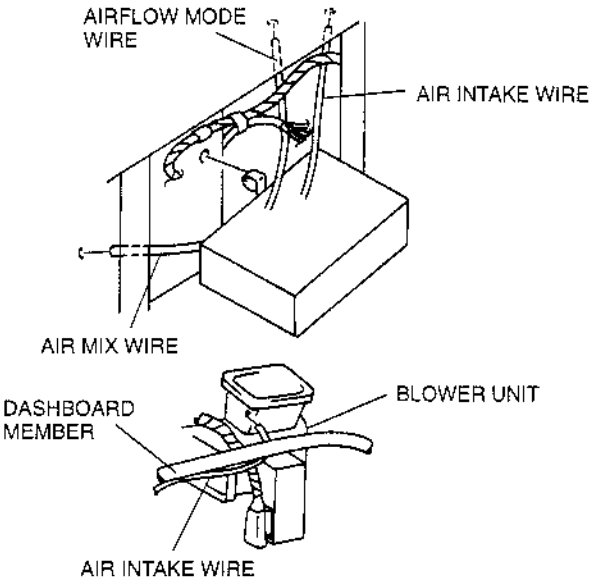

X5U740WAC

2. Connect the heater control unit connectors.
3. Insert the heater control unit until each clip clicks.

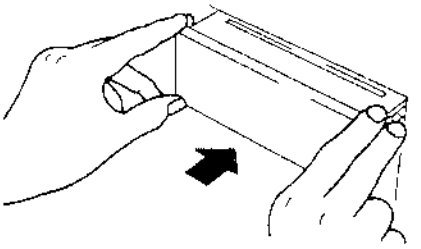

X5U740WAD

4. Install the hole covers carefully to prevent the posts from breaking off.
5. Adjust the heater control unit wire. (Refer to 07–40 HEATER CONTROL UNIT WIRE ADJUSTMENT.)
6. Connect the negative battery cable.

HEATER CONTROL UNIT DISASSEMBLY/ASSEMBLY

X5U740W18

1. Disassemble in the order indicated in the table.
2. Assemble in the reverse order of disassembly.

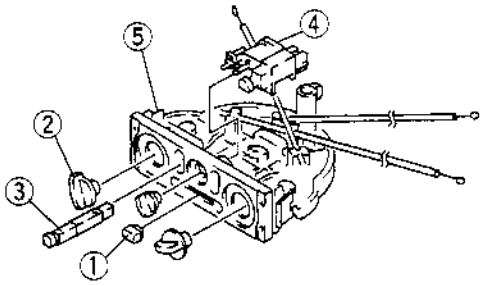

X5U740WAE

1	Knob
2	Dial
3	A/C switch
4	Fan and rear defroster switch
5	Body

HEATER CONTROL UNIT INSPECTION

X5U740W19

A/C Switch

1. Remove the heater control unit. (Refer to 07–40 HEATER CONTROL UNIT REMOVAL.)
2. Inspect for continuity between the A/C switch terminals by using an ohmmeter.

○—○ : Continuity

Switch position	Terminal	
	A	B
OFF		
ON	○	○

X5U740WAF

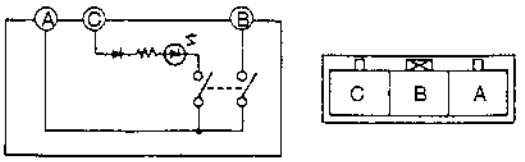

X5U740WAG

3. Connect battery positive voltage to terminal C and ground to the terminal A.
4. Turn the A/C switch on.
5. Verify that the LED illuminates.
6. If not as specified, replace the A/C switch.

Fan Switch

1. Remove the heater control unit. (Refer to 07–40 HEATER CONTROL UNIT REMOVAL.)
2. Inspect for continuity between the fan switch terminals by using an ohmmeter.

○—○ : Continuity

Switch position	Terminal					
	A	B	C	D	E	F
0						
1	○					○
2				○		○
3			○		○	○
4		○			○	○

X5U740WAH

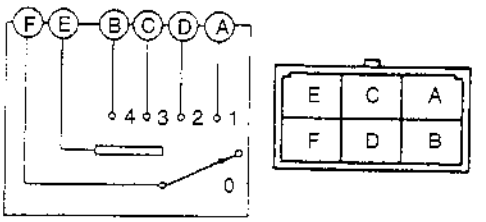

X5U740WAJ

3. If not as specified, replace the fan and rear defroster switch.

HEATER CONTROL UNIT WIRE ADJUSTMENT

X5U740W20

Air Intake Wire

1. Set the REC/FRESH lever at REC.
2. Set the air intake link to REC in the direction of the arrow and insert a screwdriver into the set hole.

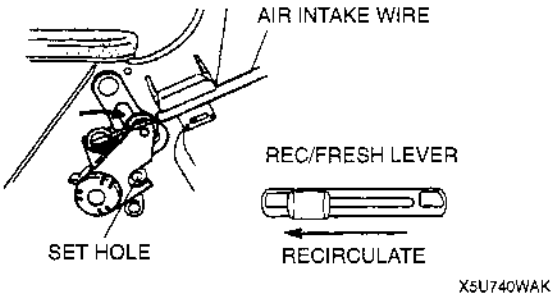

3. Connect the air intake wire to the air intake link.
4. Clamp the air intake wire to wire clamp.
5. Verify that the REC/FRESH lever moves its full stroke.

Air Mix Wire

1. Set the temperature control dial at MAX HOT.
2. Set the air mix link to MAX HOT in the direction of the arrow and insert a screwdriver into the set hole.

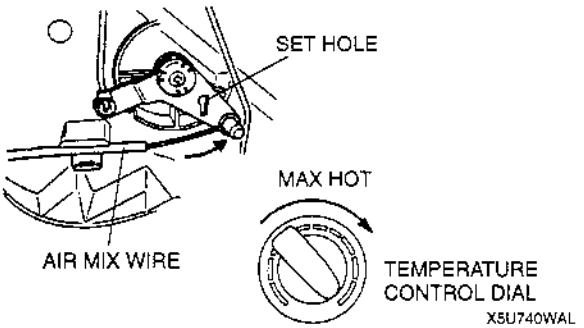

3. Connect the air mix wire to the air mix link.
4. Clamp the air mix wire to wire clamp.
5. Verify that the temperature control dial moves its full stroke.

Airflow Mode Wire

1. Set the airflow mode control dial at VENT.
2. Set the airflow mode link to VENT in the direction of the arrow and insert a screwdriver into the set hole.

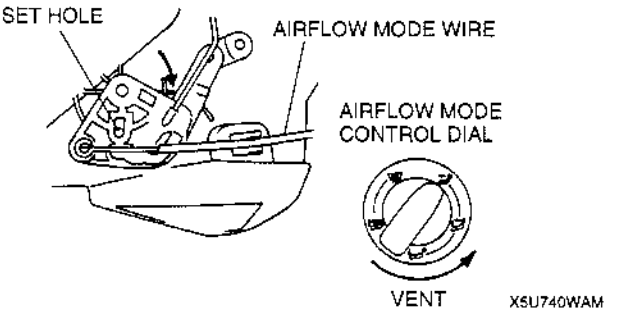

3. Connect the airflow mode wire to the airflow mode link.
4. Clamp the airflow mode wire to wire clamp.
5. Verify that the airflow mode control dial moves its full stroke.

A/C RELAY AND CONDENSER FAN RELAY REMOVAL/INSTALLATION

X5U740W12

1. Disconnect the negative battery cable.
2. Remove as indicated in the table.
3. Install in the reverse order of removal.

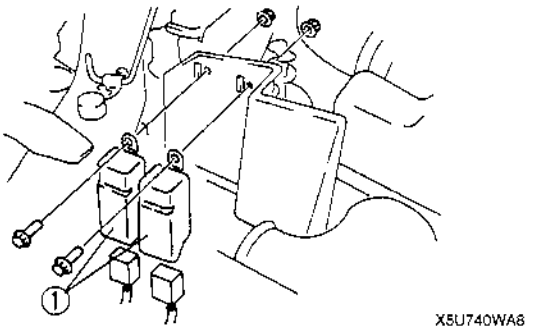

1	A/C relay and condenser fan relay

A/C RELAY AND CONDENSER FAN RELAY INSPECTION

X5U740W13

1. Remove the relay.
2. Inspect for continuity between the relay terminals by using an ohmmeter.

○—○ : Continuity

Step	Terminal			
	A	B	C	D
1	○	○		
2	B+	GND	○	○

U5U74013

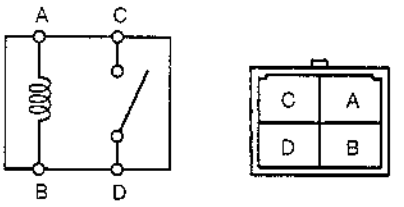

U5U74014

3. If not as specified, replace the relay.

BLOWER RELAY REMOVAL/INSTALLATION

X5U740W14

1. Disconnect the negative battery cable.
2. Remove as indicated in the table.
3. Install in the reverse order of removal.

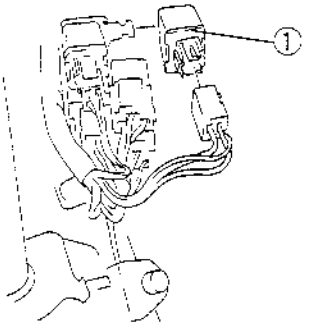

X5U740WA9

1	Blower relay

BLOWER RELAY INSPECTION

X5U740W15

1. Remove the blower relay.
2. Inspect for continuity between the blower relay terminals by using an ohmmeter.

○—○ : Continuity

Step	Terminal			
	A	B	C	D
1	○	○		
2	B+	GND	○	○

U5U74013

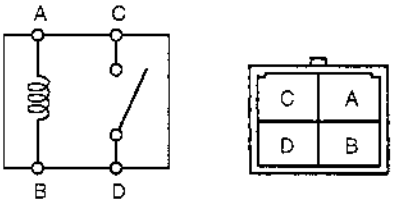

U5U74014

3. If not as specified, replace the relay.

07–50 TECHNICAL DATA

07 HVAC

X5U750W01

Item			Specification
Refrigerant	Type		R-134a
	Regular amount (g {oz})		600 {21.2}
A/C compressor	Lube oil	Type	DENSO OIL9
		Sealed volume (ml {cc, fl oz})	150 {150, 5.07}
	Magnetic clutch clearance (mm {in})		0.35—0.65 {0.014—0.025}

07–60 SERVICE TOOLS

07 HVAC SST

X5U760W01

00007–10331 Magnetic clutch stopper 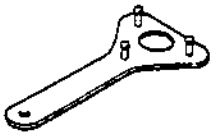 T0710331X	4992–02–020 Pressure plate remover 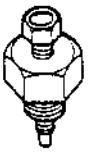 T9202020X	—

RESTRAINTS

08
SECTION

08–01 TROUBLESHOOTING

AIR BAG SYSTEM ON-BOARD DIAGNOSIS

X5U801WC1

Diagnostic Trouble Code

- The SAS control module has an on-board diagnostic function that flashes or illuminates the air bag system warning light to indicate trouble in the air bag system. The trouble can be determined by the warning light flashing or illumination pattern.

Flowchart

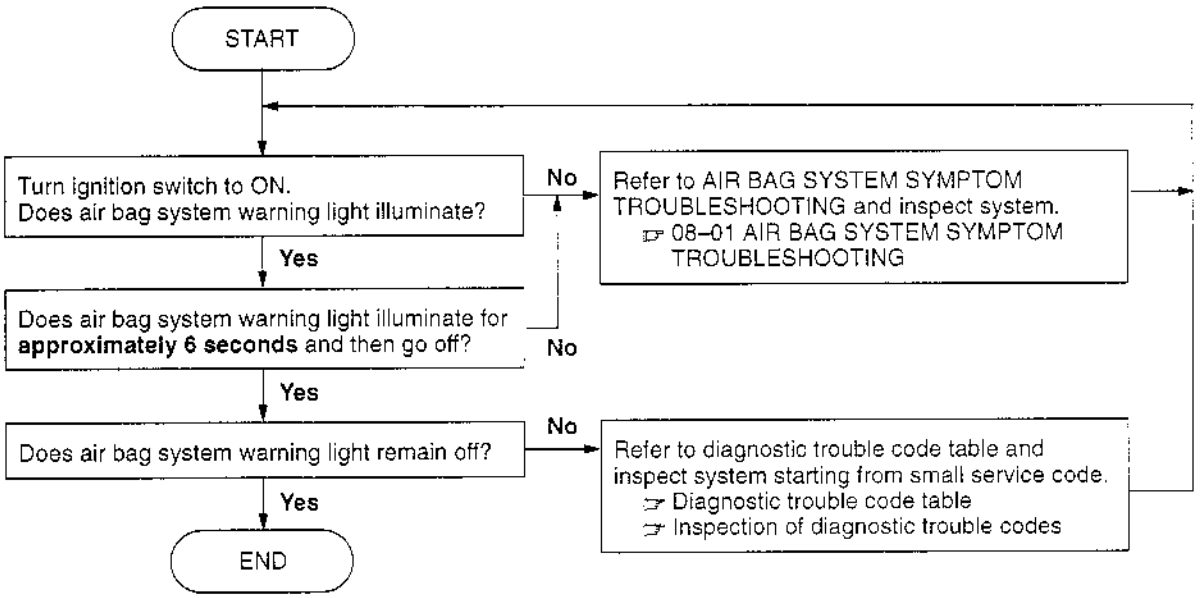

X5U801WA0

Diagnostic trouble code table

DTC	Output signal	Malfunction location
1	ON / OFF  X5U801WA1	SAS control module connector poor connection
2	ON / OFF  X5U801WA2	SAS control module
3	ON / OFF  X5U801WA3	Battery
6	ON / OFF  X5U801WA4	Driver-side air bag module
7	ON / OFF  X5U801WA5	Passenger-side air bag module
49	ON / OFF  X5U801WA6	Passenger-side air bag deactivation system
—	Continuously flashes	Deployment authorization standby code

Caution

- **When replacing a new SAS control module and the output pattern continuously flashes (standby code), perform the deployment authorization procedures. (Refer to 08–10 AIR BAG MODULE DEPLOYMENT AUTHORIZATION PROCEDURES.)**

Inspection of diagnostic trouble codes

DTC 1	SAS CONTROL MODULE CONNECTOR POOR CONNECTION		
DETECTION CONDITION	No continuity between poor connection detector bar of SAS control module		
POSSIBLE CAUSE	• SAS control module connector malfunction • Poor connection of connector		
STEP	INSPECTION		ACTION
1	**Warning** • **Handling air bag system components improperly can accidentally deploy air bag modules, which may seriously injure you. Read SERVICE WARNINGS, before handling air bag system components.** **☞ 08–10 SERVICE WARNINGS** Turn ignition switch to LOCK. Disconnect negative battery cable and wait for more than **1 minute** to allow backup power supply of SAS control module to deplete its stored power. Remove dashboard. ☞ 09–17 DASHBOARD REMOVAL/INSTALLATION Is SAS control module connector securely connected?	Yes	Go to next step.
		No	Reconnect connector properly.
2	Disconnect SAS control module connector. Is SAS control module connector okay?	Yes	Replace SAS control module. ☞ 08–10 SAS CONTROL MODULE REMOVAL/INSTALLATION
		No	Replace wiring harness.

DTC 2	SAS CONTROL MODULE
DETECTION CONDITION	Malfunction in SAS control module circuit
POSSIBLE CAUSE	SAS control module malfunction

STEP	INSPECTION	ACTION
—	—	Replace SAS control module. ☞ 08–10 SAS CONTROL MODULE REMOVAL/INSTALLATION

DTC 3	BATTERY
DETECTION CONDITION	Voltage supplied to SAS control module is less than 9 V
POSSIBLE CAUSE	**Note** • Diagnostic trouble code 3 is indicated when the voltage simultaneously drops in the harnesses of both of the following circuits. ① Harness between A/B 10 A fuse and terminal AB of the SAS control module connector. ② Harness between ENG 15 A fuse and terminal Z of the SAS control module connector. • Weak battery • Poor connection of connector

STEP	INSPECTION		ACTION
1	**Warning** • **Handling air bag system components improperly can accidentally deploy air bag modules, which may seriously injure you. Read SERVICE WARNINGS, before handling air bag system components.** **☞ 08–10 SERVICE WARNINGS** Is battery voltage **more than 9 V**?	Yes	Go to next step.
		No	Battery is weak. Inspect charge/discharge system. ☞ 01–17 BATTERY INSPECTION
2	Turn ignition switch to LOCK. Disconnect negative battery cable and wait for more than **1 minute** to allow backup power supply of SAS control module to deplete its stored power. Remove column cover. Disconnect clock spring connector. Remove glove compartment. Disconnect passenger-side air bag module connector. Remove dashboard. ☞ 09–17 DASHBOARD REMOVAL/INSTALLATION Disconnect SAS control module connector. Turn ignition switch to ON. Measure voltage at terminal AB or Z of SAS control module connector. Is voltage **more than 9 V**?	Yes	Replace SAS control module. ☞ 08–10 SAS CONTROL MODULE REMOVAL/INSTALLATION
		No	Replace wiring harness.

SAS CONTROL MODULE CONNECTOR

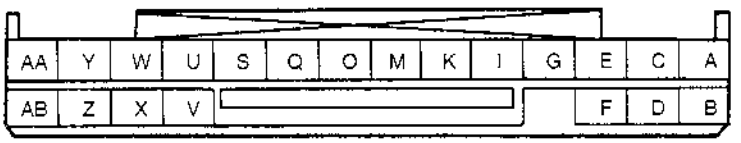

X5U801WA7

DTC 6	DRIVER-SIDE AIR BAG MODULE
DETECTION CONDITION	Resistance detected between terminals M—O of SAS control module is other than 2 Ω
POSSIBLE CAUSE	• Driver-side air bag module malfunction • Clock spring malfunction • Malfunction in wiring harness between SAS control module and driver-side air bag module

STEP	INSPECTION		ACTION
1	**Warning** • **Handling air bag system components improperly can accidentally deploy air bag modules, which may seriously injure you. Read SERVICE WARNINGS, before handling air bag system components.** **☞ 08–10 SERVICE WARNINGS** Turn ignition switch to LOCK. Disconnect negative battery cable and wait for more than **1 minute** to allow backup power supply of SAS control module to deplete its stored power. Remove driver-side air bag module. ☞ 08–10 DRIVER-SIDE AIR BAG MODULE REMOVAL/INSTALLATION Is clock spring pin okay?	Yes	Go to next step.
		No	Replace clock spring. ☞ 08–10 CLOCK SPRING REMOVAL/INSTALLATION
2	Connect leads of **SST** (Fuel And Thermometer checker) to terminals 3A and 3B of clock spring. Set resistance of **SST** (Fuel And Thermometer checker) to **2 ohms**. Connect negative battery cable. Is diagnostic trouble code 6 indicated when ignition switch is turned to ON?	Yes	Go to next step.
		No	Replace driver-side air bag module. ☞ 08–10 DRIVER-SIDE AIR BAG MODULE REMOVAL/INSTALLATION
3	Turn ignition switch to LOCK. Disconnect negative battery cable and wait for more than **1 minute** to allow backup power supply of SAS control module to deplete its stored power. Remove column cover. Disconnect clock spring connector. Is clock spring connector pin okay?	Yes	Go to next step.
		No	Replace wiring harness.
4	Connect leads of **SST** (Fuel And Thermometer checker) to terminals A and B of the clock spring connector. Set resistance of **SST** (Fuel And Thermometer checker) to **2 ohms**. Connect negative battery cable. Is diagnostic trouble code 6 indicated when ignition switch is turned to ON?	Yes	Go to next step.
		No	Replace clock spring. ☞ 08–10 CLOCK SPRING REMOVAL/INSTALLATION

STEP	INSPECTION		ACTION
5	Turn ignition switch to LOCK. Disconnect negative battery cable and wait for more than **1 minute** to allow backup power supply of SAS control module to deplete its stored power. Remove glove compartment. Disconnect passenger-side air bag module connector. Remove dashboard. ☞ 09–17 DASHBOARD REMOVAL/INSTALLATION Disconnect SAS control module connector. Inspect wiring harness between terminal O of SAS control module connector and terminal A of clock spring connector, and between terminal M of SAS control module connector and terminal B of clock spring connector for following. • Short to ground • Short to power supply • Open circuit Is wiring harness okay?	Yes	Replace SAS control module. ☞ 08–10 SAS CONTROL MODULE REMOVAL/INSTALLATION
		No	Replace wiring harness.

CLOCK SPRING

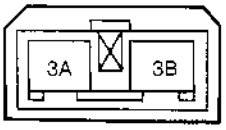

CLOCK SPRING CONNECTOR

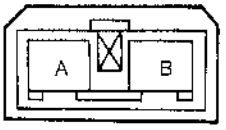

SAS CONTROL MODULE CONNECTOR

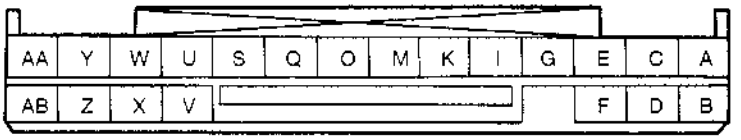

X5UB01WA8

08

DTC 7	PASSENGER-SIDE AIR BAG MODULE
DETECTION CONDITION	Resistance detected between terminals I—K of SAS control module is other than 2 Ω
POSSIBLE CAUSE	• Passenger-side air bag module malfunction • Malfunction in wiring harness between SAS control module and passenger-side air bag module

STEP	INSPECTION		ACTION
1	Warning • **Handling air bag system components improperly can accidentally deploy air bag modules, which may seriously injure you. Read SERVICE WARNINGS, before handling air bag system components.** ☞ **08–10 SERVICE WARNINGS** Turn ignition switch to LOCK. Disconnect negative battery cable and wait for more than **1 minute** to allow backup power supply of SAS control module to deplete its stored power. Disconnect passenger-side air bag module connector. Is passenger-side air bag module connector pin okay?	Yes	Go to next step.
		No	Replace wiring harness.
2	Connect leads of **SST** (Fuel And Thermometer checker) to terminals A and B of passenger-side air bag module connector. Set resistance of **SST** (Fuel And Thermometer checker) to **2 ohms.** Connect negative battery cable. Is diagnostic trouble code 7 indicated when ignition switch is turned to ON?	Yes	Go to next step.
		No	Replace passenger-side air bag module. ☞ 08–10 PASSENGER-SIDE AIR BAG MODULE REMOVAL/INSTALLATION
3	Turn ignition switch to LOCK. Disconnect negative battery cable and wait for more than **1 minute** to allow backup power supply of SAS control module to deplete its stored power. Remove column cover. Disconnect clock spring connector. Remove dashboard. ☞ 09–17 DASHBOARD REMOVAL/INSTALLATION Disconnect SAS control module connector. Inspect wiring harness between terminal K of SAS control module connector and terminal A of passenger-side air bag module connector, and between terminal I of SAS control module connector and terminal B of passenger-side air bag module connector for following. • Short to ground • Short to power supply • Open circuit Is wiring harness okay?	Yes	Replace SAS control module. ☞ 08–10 SAS CONTROL MODULE REMOVAL/INSTALLATION
		No	Replace wiring harness.

PASSENGER-SIDE AIR BAG MODULE CONNECTOR

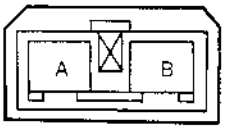

SAS CONTROL MODULE CONNECTOR

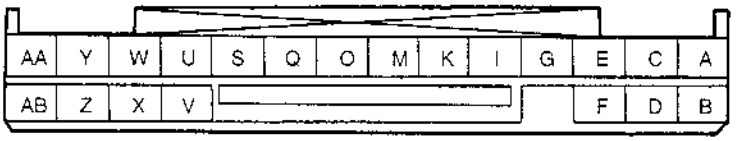

X5U80-WA9

DTC 49	PASSENGER-SIDE AIR BAG CUT-OFF SYSTEM
DETECTION CONDITION	• No voltage detected at terminal V of SAS control module • Terminal G of SAS control module is not connected to ground
POSSIBLE CAUSE	• Passenger-side air bag deactivation switch malfunction • SAS control module malfunction • Malfunction in wiring harness between METER 15 A fuse and passenger-side air bag deactivation switch • Malfunction in wiring harness between SAS control module and ground • Malfunction in wiring harness between SAS control module and passenger-side air bag deactivation switch

STEP	INSPECTION		ACTION
1	Disconnect negative battery cable. Remove center panel. ☞ 09–17 CENTER PANEL REMOVAL/INSTALLATION Connect negative battery cable. Measure voltage at terminal A of passenger-side air bag deactivation switch connector. Is voltage **12 V**?	Yes	Go to next step.
		No	Replace wiring harness.
2	Inspect passenger-side air bag deactivation switch. ☞ 08–10 PASSENGER-SIDE AIR BAG DEACTIVATION SWITCH INSPECTION Is switch okay?	Yes	Go to next step.
		No	Replace passenger-side air bag cut-off switch. ☞ 08–10 PASSENGER-SIDE AIR BAG DEACTIVATION SWITCH REMOVAL/INSTALLATION
3	**Warning** • **Handling air bag system components improperly can accidentally deploy air bag modules, which may seriously injure you. Read SERVICE WARNINGS, before handling air bag system components.** **☞ 08–10 SERVICE WARNINGS** Turn ignition switch to LOCK. Disconnect negative battery cable and wait for more than **1 minute** to allow backup power supply of SAS control module to deplete its stored power. Remove column cover. Disconnect clock spring connector. Remove glove compartment. Disconnect passenger-side air bag module connector. Remove dashboard. ☞ 09–17 DASHBOARD REMOVAL/INSTALLATION Disconnect SAS control module connector. Measure voltage at terminal V of SAS control module connector? Is voltage **12 V**?	Yes	Go to next step.
		No	Replace wiring harness.
4	Is there continuity between terminal G of SAS control module and ground?	Yes	Replace SAS control module. ☞ 08–10 SAS CONTROL MODULE REMOVAL/INSTALLATION
		No	Replace wiring harness.

PASSENGER-SIDE AIR BAG DEACTIVATION SWITCH CONNECTOR

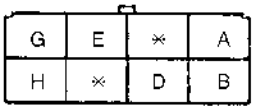

SAS CONTROL MODULE CONNECTOR

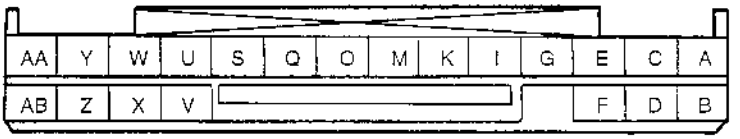

X5U801WAA

AIR BAG SYSTEM SYMPTOM TROUBLESHOOTING

X5U801WC2

Foreword

- Refer to section GI and thoroughly read and understand the basic flow of troubleshooting in order to properly perform the procedures.
- For the steps that have an asterisk (*), inspect the connector/terminal connection for continuity and damage. If the connection is poor, reconnect it, or repair or replace the appropriate parts if necessary.

Troubleshooting Index

- Use the chart below to verify the symptoms of the trouble in order to diagnose the appropriate area.

No.	Malfunction symptom
1	Air bag system warning light does not illuminate when ignition switch is turned to ON.
2	Air bag system warning light illuminates immediately after ignition switch is turned to ON and remains illuminated.
3	Passenger-side air bag deactivation indicator does not illuminate when passenger-side air bag deactivation switch is turned to OFF.
4	With the passenger-side air bag deactivation switch at ON, passenger-side air bag deactivation indicator illuminates immediately after ignition switch is turned to ON and remains illuminated.
5	Passenger-side air bag deactivation indicator does not dim when headlight switch is turned on.
6	Passenger-side air bag deactivation switch illumination does not illuminate when headlight switch is on.

Symptom Troubleshooting

Note

- The following may be the cause of trouble if the symptom does not go away after the symptom troubleshooting steps are followed.

1. Poor contact at terminal D of short connector (6-pin) between instrument cluster and SAS control module.
2. Simultaneous poor contact at terminals A and F of short connector (6-pin) between A/B 10 A fuse and the SAS control module, ENGINE 15 A fuse and the SAS control module.
3. Simultaneous poor contact at terminals S and X of SAS control module connector (21-pin).
4. Simultaneous poor contact at terminals AB and Z of SAS control module connector (21-pin).
5. Simultaneous poor contact in wiring harness between terminal S of SAS control module connector (21-pin) and ground, terminal X of SAS control module connector (21-pin) and ground.
6. Simultaneous poor contact in wiring harness between A/B 10 A fuse and the SAS control module, ENGINE 15 A fuse and the SAS control module.

1 Air bag system warning light does not illuminate when ignition switch is turned to ON.

TROUBLESHOOTING HINTS

Malfunction in SAS control module power supply/ground circuit

① Air bag system warning light does not illuminate

- SAS control module malfunction
- Instrument cluster (print plate) malfunction
- Terminal 1C of instrument cluster connector (16-pin) malfunction
- Terminal 3D of instrument cluster connector (10-pin) malfunction
- Terminal Q of SAS control module connector (21-pin) malfunction
- Air bag system warning light bulb malfunction
- Poor installation of air bag system warning light bulb
- Poor connection at terminal 1C of instrument cluster connector (16-pin)
- Poor connection at terminal 3D of instrument cluster connector (10-pin)
- Poor connection at terminal Q of SAS control module connector (21-pin)
- Poor contact in instrument cluster connector (10, 16-pin)
- Malfunction in wiring harness between instrument cluster and SAS control module

STEP	INSPECTION		ACTION
1	Is instrument cluster connector (10, 16-pin) securely connected?	Yes	Go to next step.
		No	Reconnect connector properly, then go to step 10.
2	Is air bag system warning light bulb securely installed?	Yes	Go to next step.
		No	Reinstall properly, then go to step 10.
3	Is air bag system warning light bulb functional?	Yes	Reinstall properly, then go to next step.
		No	Replace bulb, then go to step 10.

STEP	INSPECTION		ACTION
4	Are terminal 1C of instrument cluster connector (16-pin) and terminal 3D of instrument cluster connector (10-pin) securely connected?	Yes	Go to next step.
		No	Reconnect properly, then go to step 10.
5	Are terminal 1C of instrument cluster connector (16-pin) and terminal 3D of instrument cluster connector (10-pin) damaged?	Yes	Repair or replace terminal, then go to step 10.
		No	Go to next step.
6	Is there continuity between print plate of instrument cluster terminals 1C and 3D?	Yes	Go to next step.
		No	Replace print plate, then go to step 10.
7	Turn ignition switch to LOCK. Disconnect negative battery cable and wait for more than **1 minute** to allow backup power supply of SAS control module to deplete its stored power. Remove column cover. Disconnect clock spring connector. Remove glove compartment. Disconnect passenger-side air bag module connector. Remove dashboard. ☞ 09–17 DASHBOARD REMOVAL/INSTALLATION Disconnect SAS control module connector (21-pin). Is terminal Q of SAS control module connector (21-pin) securely connected?	Yes	Go to next step.
		No	Reconnect properly, then go to step 10.
8	Is terminal Q of SAS control module connector (21-pin) damaged?	Yes	Replace air bag harness, then go to step 10.
		No	Go to next step.
*9	Disconnect SAS control module connector (21-pin) and instrument cluster connector (10-pin). Is there continuity between terminal Q of SAS control module connector (21-pin) and terminal 3D of instrument cluster connector (10-pin)?	Yes	Replace SAS control module, then go to next step. ☞ 08–10 SAS CONTROL MODULE REMOVAL/INSTALLATION
		No	Replace wiring harness between instrument cluster and SAS control module, then go to next step.
10	Connect SAS control module connector (21-pin). Install dashboard. ☞ 09–17 DASHBOARD REMOVAL/INSTALLATION Connect passenger-side air bag module connector. Connect clock spring connector. Connect instrument cluster connector. Connect negative battery cable. When turning ignition switch to ON, does air bag system warning light operate properly?	Yes	Troubleshooting completed. Explain repairs to customer.
		No	Reinspect malfunction symptoms, then repeat from step 1 if malfunction reoccurs.

2	**Air bag system warning light illuminates immediately after ignition switch is turned to ON and remains illuminated.**

TROUBLESHOOTING HINTS

Malfunction in air bag system warning light circuit

① Air bag system warning light remains illuminated

- SAS control module malfunction
- Malfunction of short bar between terminals Q and S of SAS control module connector (21-pin)
- Poor connection in SAS control module connector (21-pin)
- Short circuit in wiring harness between instrument cluster and SAS control module

STEP	INSPECTION		ACTION
1	Turn ignition switch to LOCK. Disconnect negative battery cable and wait for more than **1 minute** to allow backup power supply of SAS control module to deplete its stored power. Remove column cover. Disconnect clock spring connector. Remove glove compartment. Disconnect passenger-side air bag module connector. Remove dashboard. ☞ 09–17 DASHBOARD REMOVAL/INSTALLATION Disconnect SAS control module connector (21-pin). Is SAS control module connector (21-pin) securely connected?	Yes	Go to next step.
		No	Reconnect properly, then go to step 5.
2	Is short bar between terminals Q and S of SAS control module connector (21-pin) bent?	Yes	Replace air bag harness, then go to step 5.
		No	Go to next step.
3	Is SAS control module short bar hook okay?	Yes	Go to next step.
		No	Replace SAS control module, then go to step 5. ☞ 08–10 SAS CONTROL MODULE REMOVAL/INSTALLATION
*4	Disconnect instrument cluster connector (10-pin). Insert insulating material between terminals Q and S of SAS control module connector (21-pin) so short bar cannot function. Is there continuity between terminal Q of SAS control module connector (21-pin) and ground?	Yes	Replace wiring harness between instrument cluster and SAS control module, then go to next step.
		No	Replace SAS control module, then go to next step. ☞ 08–10 SAS CONTROL MODULE REMOVAL/INSTALLATION
5	Connect SAS control module connector (21-pin). Install dashboard. ☞ 09–17 DASHBOARD REMOVAL/INSTALLATION Connect passenger-side air bag module connector. Connect clock spring connector. Connect instrument cluster connector. Connect negative battery cable. When turning ignition switch to ON, does air bag system warning light operate properly?	Yes	Troubleshooting completed. Explain repairs to customer.
		No	Reinspect malfunction symptoms, then repeat from step 1 if malfunction reoccurs.

3	**Passenger-side air bag deactivation indicator does not illuminate when passenger-side air bag deactivation switch is turned to OFF.**

TROUBLESHOOTING HINTS

Malfunction in passenger-side air bag deactivation switch signal circuit

① Passenger-side air bag deactivation indicator does not illuminate

- SAS control module malfunction
- Passenger-side air bag deactivation switch malfunction
- Terminal D or E of passenger-side air bag deactivation switch connector malfunction
- Terminal B of SAS control module connector (21-pin) malfunction
- Terminal D or E of poor connection at passenger-side air bag deactivation switch connector
- Poor connection at terminal B of SAS control module connector (21-pin)
- Open circuit in wiring harness between passenger-side air bag deactivation switch and ground
- Open circuit in wiring harness between passenger-side air bag deactivation switch and SAS control module

STEP	INSPECTION		ACTION
1	When key is inserted into passenger-side air bag deactivation switch key cylinder, can it be set to the OFF position?	Yes	Go to next step.
		No	Replace passenger-side air bag deactivation switch, then go to step 9. ☞ 08–10 PASSENGER-SIDE AIR BAG DEACTIVATION SWITCH REMOVAL/INSTALLATION
2	Turn ignition switch to LOCK. Disconnect negative battery cable and wait for more than **1 minute** to allow backup power supply of SAS control module to deplete its stored power. Disconnect passenger-side air bag deactivation switch connector. Is terminal D or E of passenger-side air bag deactivation switch damaged?	Yes	Replace passenger-side air bag deactivation switch, then go to step 9. ☞ 08–10 PASSENGER-SIDE AIR BAG DEACTIVATION SWITCH REMOVAL/INSTALLATION
		No	Go to next step.
3	Is terminal D or E of passenger-side air bag deactivation switch connector damaged?	Yes	Replace air bag harness, then go to step 9.
		No	Go to next step.
4	Turn passenger-side air bag deactivation switch key to OFF. Is there continuity between terminals D and E of passenger-side air bag deactivation switch?	Yes	Go to next step.
		No	Replace passenger-side air bag deactivation switch, then go to step 9. ☞ 08–10 PASSENGER-SIDE AIR BAG DEACTIVATION SWITCH REMOVAL/INSTALLATION
5	Is there continuity between terminal E of passenger-side air bag deactivation switch connector and ground?	Yes	Go to next step.
		No	Replace wiring harness between passenger-side air bag deactivation switch and ground, then go to step 9.
6	Remove column cover. Disconnect clock spring connector. Remove glove compartment. Disconnect passenger-side air bag module connector. Remove dashboard. ☞ 09–17 DASHBOARD REMOVAL/INSTALLATION Disconnect SAS control module connector (21-pin). Is terminal B of SAS control module (21-pin) damaged?	Yes	Replace SAS control module, then go to step 9. ☞ 08–10 SAS CONTROL MODULE REMOVAL/INSTALLATION
		No	Go to next step.
7	Is terminal B of SAS control module connector (21-pin) damaged?	Yes	Replace air bag harness, then go to step 9.
		No	Go to next step.
8	Is there continuity between terminal B of SAS control module connector (21-pin) and terminal D of passenger-side air bag deactivation switch connector?	Yes	Replace SAS control module, then go to next step.
		No	Replace wiring harness between SAS control module and passenger-side air bag deactivation switch, then go to next step.

STEP	INSPECTION		ACTION
9	Connect SAS control module connector (21-pin). Install dashboard. ☞ 09–17 DASHBOARD REMOVAL/INSTALLATION Connect passenger-side air bag module connector. Connect clock spring connector. Connect passenger-side air bag deactivation switch connector. Turn passenger-side air bag deactivation switch to OFF. Remove the key. Connect negative battery cable. When turning ignition switch to ON, does passenger-side air bag deactivation indicator illuminate?	Yes	Troubleshooting completed. Explain repairs to customer.
		No	Reinspect malfunction symptoms, then repeat from step 1 if malfunction reoccurs.

4	**With the passenger-side air bag deactivation switch is at ON, passenger-side air bag deactivation indicator illuminates immediately after ignition switch is turned to ON and remains illuminated.**

TROUBLESHOOTING HINTS

Malfunction in passenger-side air bag deactivation switch signal circuit

① Passenger-side air bag deactivation indicator does not go out

- SAS control module malfunction
- Passenger-side air bag deactivation switch malfunction
- Terminal D or E of passenger-side air bag deactivation switch connector malfunction
- Short circuit in wiring harness between passenger-side air bag deactivation switch and SAS control module

STEP	INSPECTION		ACTION
1	When key is inserted into passenger-side air bag deactivation switch key cylinder, can it be set to the ON position?	Yes	Go to next step.
		No	Replace passenger-side air bag deactivation switch, then go to step 6. ☞ 08–10 PASSENGER-SIDE AIR BAG DEACTIVATION SWITCH REMOVAL/INSTALLATION
2	Turn ignition switch to LOCK. Disconnect negative battery cable and wait for more than **1 minute** to allow backup power supply of SAS control module to deplete its stored power. Disconnect passenger-side air bag deactivation switch connector. Is terminal D or E of passenger-side air bag deactivation switch damaged?	Yes	Replace passenger-side air bag deactivation switch, then go to step 6. ☞ 08–10 PASSENGER-SIDE AIR BAG DEACTIVATION SWITCH REMOVAL/INSTALLATION
		No	Go to next step.
3	Is terminal D or E of passenger-side air bag deactivation switch connector damaged?	Yes	Replace air bag harness, then go to step 6.
		No	Go to next step.
4	Turn passenger-side air bag deactivation switch to ON. Is there continuity between terminals D and E of passenger-side air bag deactivation switch?	Yes	Replace passenger-side air bag deactivation switch, then go to step 6. ☞ 08–10 PASSENGER-SIDE AIR BAG DEACTIVATION SWITCH REMOVAL/INSTALLATION
		No	Go to next step.
5	Remove column cover. Disconnect clock spring connector. Remove glove compartment. Disconnect passenger-side air bag module connector. Remove dashboard. ☞ 09–17 DASHBOARD REMOVAL/INSTALLATION Disconnect SAS control module connector (21-pin). Is there continuity between terminal D of passenger-side air bag deactivation switch connector and ground?	Yes	Replace wiring harness between SAS control module and passenger-side air bag deactivation switch, then go to next step.
		No	Replace SAS control module, then go to next step. ☞ 08–10 SAS CONTROL MODULE REMOVAL/INSTALLATION
6	Connect SAS control module connector (21-pin). Install dashboard. ☞ 09–17 DASHBOARD REMOVAL/INSTALLATION Connect passenger-side air bag module connector. Connect clock spring connector. Connect passenger-side air bag deactivation switch connector. Turn passenger-side air bag deactivation switch to ON. Remove the key. Connect negative battery cable. When turning ignition switch to ON, does passenger-side air bag deactivation indicator illuminate for **approximately 6 seconds** and then go out?	Yes	Troubleshooting completed. Explain repairs to customer.
		No	Reinspect malfunction symptoms, then repeat from step 1 if malfunction reoccurs.

5	Passenger-side air bag deactivation indicator does not dim when headlight switch is turned on.		
TROUBLESHOOTING HINTS Malfunction in TNS signal circuit ① Passenger-side air bag deactivation indicator does not dim • SAS control module malfunction • TNS signal circuit malfunction • Terminal Y of SAS control module connector (21-pin) malfunction • Poor connection at terminal Y of SAS control module connector (21-pin) • Malfunction in wiring harness between TNS relay and SAS control module			
STEP	**INSPECTION**		**ACTION**
1	Does parking light illuminate when headlight switch is turned on?	Yes	Go to next step.
		No	Inspect TNS signal circuit, then go to step 5.
2	Turn ignition switch to LOCK. Disconnect negative battery cable and wait for more than **1 minute** to allow backup power supply of SAS control module to deplete its stored power. Remove column cover. Disconnect clock spring connector. Remove glove compartment. Disconnect passenger-side air bag module connector. Remove dashboard. ☞ 09–17 DASHBOARD REMOVAL/INSTALLATION Disconnect SAS control module connector (21-pin). Is terminal Y of SAS control module (21-pin) damaged?	Yes	Replace SAS control module, then go to step 5. ☞ 08–10 SAS CONTROL MODULE REMOVAL/INSTALLATION
		No	Go to next step.
3	Is terminal Y of SAS control module connector (21-pin) damaged?	Yes	Replace air bag harness, then go to step 5.
		No	Go to next step.
4	Disconnect TNS relay connector. Is there continuity between terminal Y of SAS control module connector (21-pin) and terminal D of TNS relay connector?	Yes	Replace SAS control module, then go to next step. ☞ 08–10 SAS CONTROL MODULE REMOVAL/INSTALLATION
		No	Replace wiring harness between SAS control module and TNS relay, then go to next step.
5	Connect SAS control module connector (21-pin). Install dashboard. ☞ 09–17 DASHBOARD REMOVAL/INSTALLATION Connect passenger-side air bag module connector. Connect clock spring connector. Connect passenger-side air bag deactivation switch connector. Connect negative battery cable. When ignition switch is turned to ON and headlight switch is turned on, does passenger-side air bag deactivation indicator illuminate for **approximately 6 seconds** and then dim?	Yes	Troubleshooting completed. Explain repairs to customer.
		No	Reinspect malfunction symptoms, then repeat from step 1 if malfunction reoccurs.

6	Passenger-side air bag deactivation switch illumination does not illuminate when headlight switch is on.

TROUBLESHOOTING HINTS

Malfunction in passenger-side air bag deactivation switch illumination signal circuit

① Passenger-side air bag deactivation switch illumination does not illuminate

- Passenger-side air bag deactivation switch malfunction
- TNS relay signal circuit malfunction
- Panel light control switch signal circuit malfunction
- Terminal B or G of passenger-side air bag deactivation switch connector malfunction
- Passenger-side air bag deactivation switch illumination bulb malfunction
- Poor installation of passenger-side air bag deactivation switch illumination bulb
- Terminal B or G of poor connection at passenger-side air bag deactivation switch connector
- Malfunction in wiring harness between TNS relay and passenger-side air bag deactivation switch
- Malfunction in wiring harness between passenger-side air bag deactivation switch and panel light control switch

STEP	INSPECTION		ACTION
1	Does parking light illuminate when headlight switch is turned on?	Yes	Go to next step.
		No	Inspect TNS signal circuit, then go to step 9.
2	Does panel light control switch operate correctly?	Yes	Go to next step.
		No	Inspect panel light control switch signal circuit, then go to step 9.
3	Turn ignition switch to LOCK. Disconnect negative battery cable and wait for more than **1 minute** to allow backup power supply of SAS control module to deplete its stored power. Disconnect passenger-side air bag deactivation switch connector. Is terminal B or G of passenger-side air bag deactivation switch damaged?	Yes	Replace passenger-side air bag deactivation switch, then go to step 9. ☞ 08–10 PASSENGER-SIDE AIR BAG DEACTIVATION SWITCH REMOVAL/INSTALLATION
		No	Go to next step.
4	Is terminal B or G of passenger-side air bag deactivation switch connector damaged?	Yes	Repair wiring harness of damaged terminal, then go to step 9.
		No	Go to next step.
5	Is passenger-side air bag deactivation switch illumination bulb securely installed?	Yes	Go to next step.
		No	Reinstall properly, then go to step 9.
6	Is passenger-side air bag deactivation switch illumination bulb functional?	Yes	Reinstall properly, then go to next step.
		No	Replace bulb, then go to step 9.
7	Is there continuity between terminals B and G of passenger-side air bag deactivation switch?	Yes	Go to next step.
		No	Replace passenger-side air bag deactivation switch, then go to step 9. ☞ 08–10 PASSENGER-SIDE AIR BAG DEACTIVATION SWITCH REMOVAL/INSTALLATION
8	Disconnect TNS relay connector. Is there continuity between terminal D of TNS relay connector and terminal B of passenger-side air bag deactivation switch connector?	Yes	Inspect wiring harness between passenger-side air bag deactivation switch and panel light control switch, then go to next step.
		No	Repair wiring harness between TNS relay and passenger-side air bag deactivation switch, then go to next step.
9	Connect passenger-side air bag deactivation switch connector. Connect negative battery cable. When headlight switch is turned on, does passenger-side air bag deactivation switch illumination illuminate?	Yes	Troubleshooting completed. Explain repairs to customer.
		No	Reinspect malfunction symptoms, then repeat from step 1 if malfunction reoccurs.

08–10 AIR BAG SYSTEM

AIR BAG SYSTEM SERVICE WARNINGS

Component Disassembly

- **Disassembling and reassembling the components of the air bag system can render the system inoperative, which may result in serious injury or death in the event of an accident. Do not disassemble any air bag system component.**

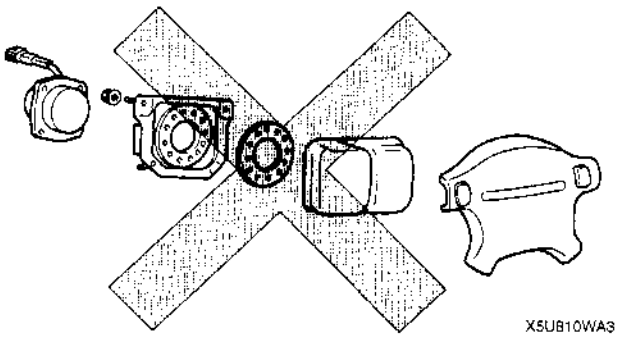

X5U810WA3

Wiring Harness Repair

- **Incorrectly repairing an air bag system wiring harness can accidentally deploy the air bag module, which can cause serious injury. If a problem is found in the system wiring, replace the wiring harness. Do not try to repair it.**

X5U810W01

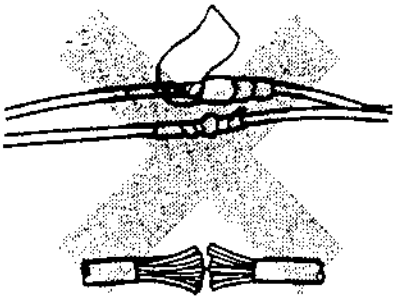

X5U810WA4

Air Bag Module Inspection

- **Inspecting the air bag module by using an ohmmeter can deploy the air bag module, which may cause serious injury. Do not use an ohmmeter to inspect the air bag module. Always use the on-board diagnostic function to diagnose the air bag for malfunctions. (Refer to 08–01 AIR BAG SYSTEM ON-BOARD DIAGNOSIS.)**

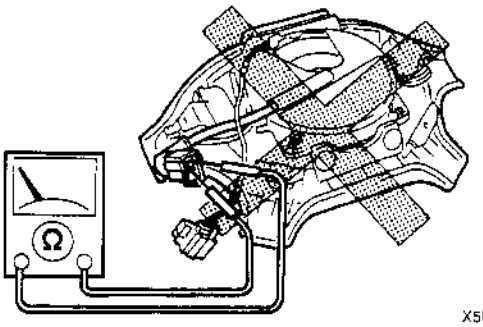

X5U810WA0

Air Bag Module Handling

- A live (undeployed) air bag module may accidentally deploy when it is handled and cause serious injury. When carrying a live (undeployed) air bag module, point the front surface away from your body to lessen the chance of injury in case it deploys.

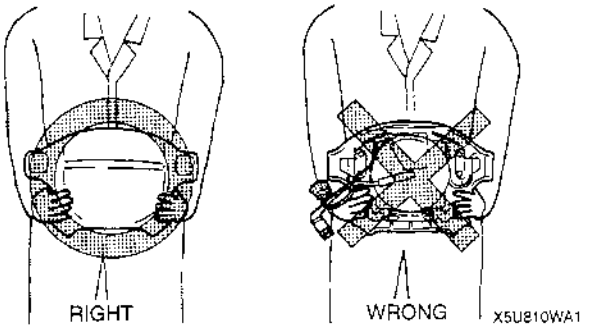

- A live (undeployed) air bag module placed face down on a surface is dangerous. If the air bag module deploys, the motion of the module can cause serious injury. Always face the front surface up to reduce the motion of the module in case it accidentally deploys.

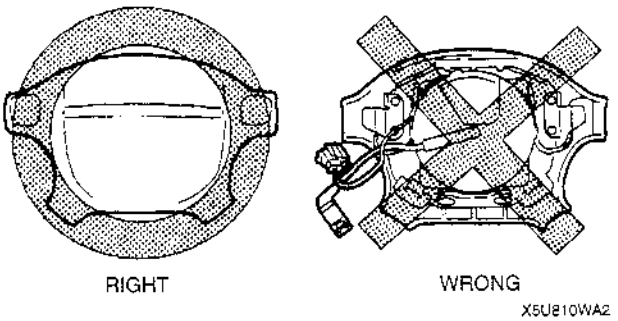

SAS Control Module Handling

- Disconnecting the SAS control module connector or removing the SAS control module with the ignition switch at ON can cause the air bag modules to deploy, which may seriously injure you. Before disconnecting the SAS control module connector or removing the SAS control module, turn the ignition switch to LOCK, then disconnect the negative battery cable and wait for more than 1 minute to allow the backup power supply of the SAS control module to deplete its stored power.
- Connecting the SAS control module connector without firmly installing the SAS control module to the vehicle is dangerous. The crash sensor inside the control module may send an electrical signal to the air bag modules. This will deploy the air bag modules, which may result in serious injury. Therefore, before connecting the connector, firmly mount the control module to the vehicle.
- For vehicles with a single point sensor, once an air bag is deployed due to an accident or other causes, the SAS control module must be replaced with a new one even if the used one does not have any external signs of damage. The used SAS control module may have been damaged internally which may cause improper operation, resulting in major injuries or even death. The used single point SAS control module cannot be bench-checked or self-checked.

Component Handling

- Oil, grease, water, etc on components may cause the air bag to fail to deploy in an accident, which may cause serious injury. Do not allow oil, grease, water, etc on components.
- Inserting a screwdriver, etc into the connector of the air bag module may damage the connector and cause the air bag module to deploy improperly, which may cause serious injury. Do not insert any foreign objects into the connector.

Component Reusing

- Once an air bag module is deployed due to an accident or other causes, even if it does not have any external signs of damage, the air bag module may have been damaged internally which may cause improper operation. The improper operation may cause serious injury. Always self-check the undamaged air bag module to determine whether it can be reused. (Refer to 08–01 AIR BAG SYSTEM ON-BOARD DIAGNOSIS.)

DRIVER-SIDE AIR BAG MODULE REMOVAL/INSTALLATION

X5U810W02

Warning

- **Handling the air bag module improperly can accidentally deploy the air bag module, which may seriously injure you. Read AIR BAG SYSTEM SERVICE WARNINGS before handling the air bag module. (Refer to 08–10 AIR BAG SYSTEM SERVICE WARNINGS.)**

1. Turn the ignition switch to LOCK.
2. Disconnect the negative battery cable and wait for more than **1 minute** to allow the backup power supply of the SAS control module to deplete its stored power.
3. Remove in the order indicated in the table.
4. Install in the reverse order of removal.
5. Turn the ignition switch to ON.
6. Verify that the air bag system warning light illuminates for **approximately 6 seconds** then goes off.
7. If the air bag system warning light remains on, off, or repeats flashing after servicing, there are malfunctions in the system. Carry out the inspection again. (Refer to 08–01 AIR BAG SYSTEM ON-BOARD DIAGNOSIS.)

STANDARD TYPE

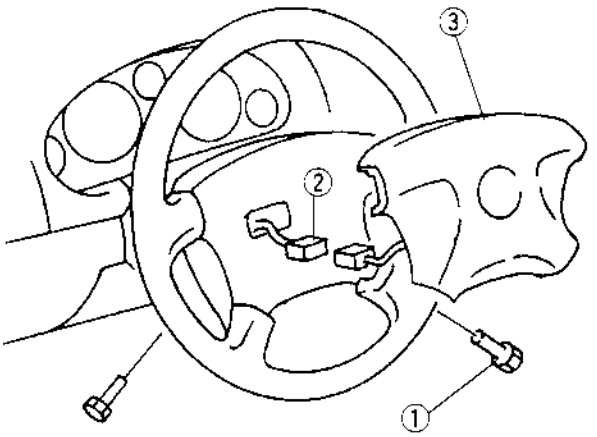

7.9—11.7 N·m {80—120 kgf·cm, 70—104 in·lbf}

X5U810WA5

SPORT TYPE

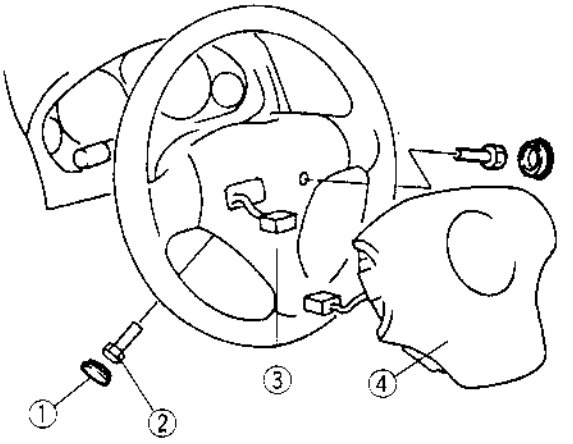

7.9—11.7 N·m {80—120 kgf·cm, 70—104 in·lbf}

X5U810WA6

1	Cap
2	Bolt ☞ Installation note
3	Connector ☞ Installation note
4	Driver-side air bag module

Connector Installation Note

- Install the connector and secure the car-side harness onto the hook as shown in the figure.

STANDARD TYPE

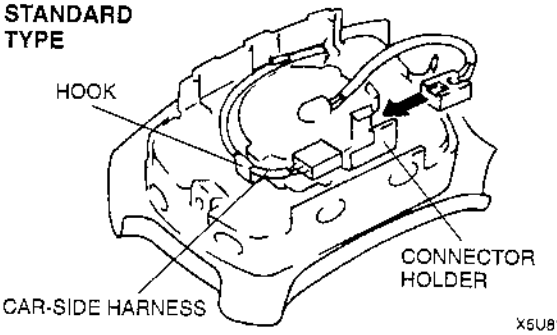

X5U810WA7

SPORT TYPE

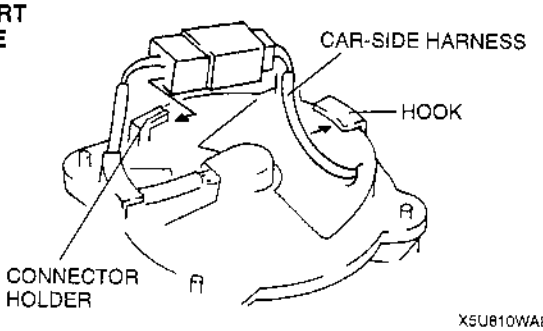

X5U810WA8

Bolt Installation Note

- Tighten the bolts in the order shown in the figure.

STANDARD TYPE

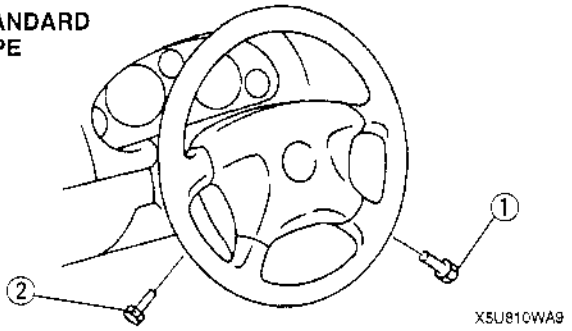

X5U810WA9

SPORT TYPE

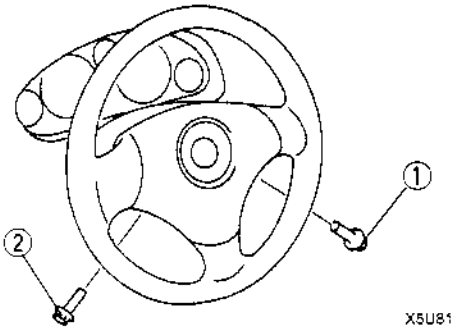

X5U810WAA

PASSENGER-SIDE AIR BAG MODULE REMOVAL/INSTALLATION

X5U810W03

Warning

- **Handling the air bag module improperly can accidentally deploy the air bag module, which may seriously injure you. Read AIR BAG SYSTEM SERVICE WARNINGS before handling the air bag module. (Refer to 08–10 AIR BAG SYSTEM SERVICE WARNINGS.)**

1. Turn the ignition switch to LOCK.
2. Disconnect the negative battery cable and wait for more than **1 minute** to allow the backup power supply of the SAS control module to deplete its stored power.
3. Remove the glove compartment.
4. Remove in the order indicated in the table.
5. Install in the reverse order of removal.
6. Turn the ignition switch to ON.
7. Verify that the air bag system warning light illuminates for **approximately 6 seconds** then goes off.
8. If the air bag system warning light remains on, off, or repeats flashing after servicing, there are malfunctions in the system. Carry out the inspection again. (Refer to 08–01 AIR BAG SYSTEM ON-BOARD DIAGNOSIS.)

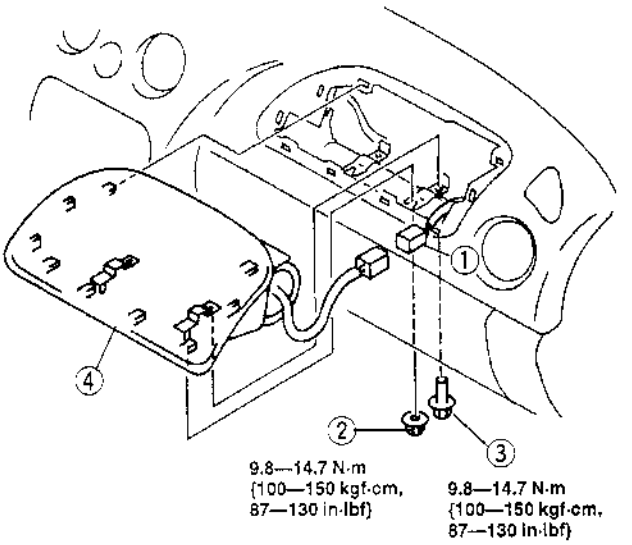

X5U810WAB

1	Connector ☞ Installation note
2	Nut
3	Bolt
4	Passenger-side air bag module

- Install the connector as shown in the figure.

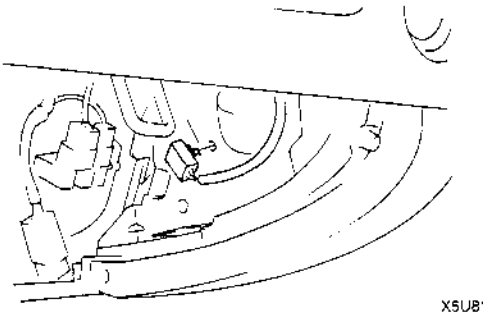

X5U810WAC

CLOCK SPRING ADJUSTMENT

1. Set the front wheels straight ahead.

Caution
- **The clock spring will break if over-wound. Do not forcibly turn the clock spring when turning it.**

2. Turn the clock spring clockwise until it stops.

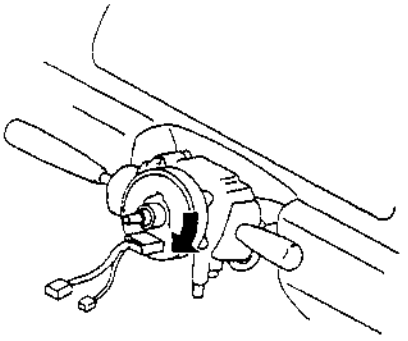

X5U810WAG

3. Turn the clock spring counterclockwise **2.75 turns**.

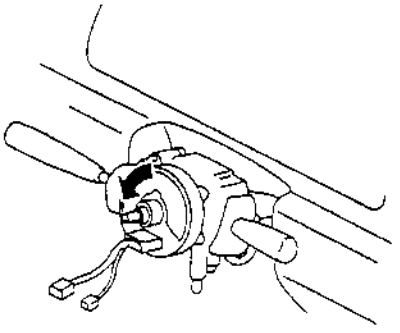

X5U810WAH

X5U810WC6

4. Align the mark on the clock spring with the mark on the outer housing.

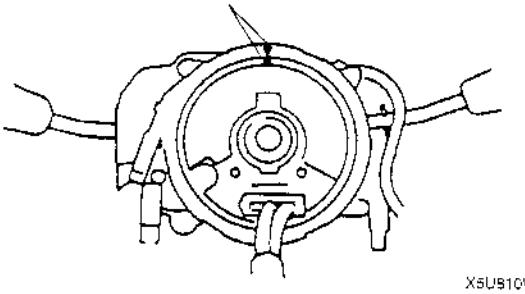

X5U810WAJ

CLOCK SPRING REMOVAL/INSTALLATION

1. Disconnect the negative battery cable.
2. Remove the column cover.
3. Remove the driver-side air bag module. (Refer to 08–10 DRIVER-SIDE AIR BAG MODULE REMOVAL/INSTALLATION.)
4. Remove the steering wheel. (Refer to 06–12 STEERING WHEEL AND COLUMN REMOVAL/INSTALLATION.)
5. Remove in the order indicated in the table.
6. Install in the reverse order of removal.

X5U810W05

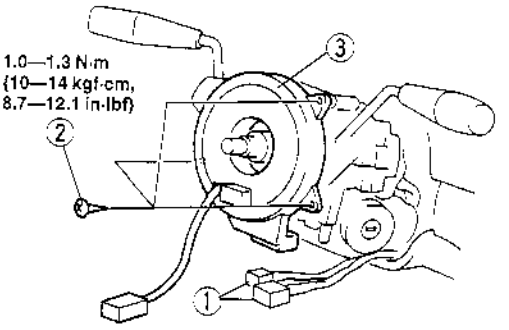

X5U710WAF

1	Connector
2	Screw
3	Clock spring

CLOCK SPRING INSPECTION

X5U810W07

1. Remove the clock spring. (Refer to 08–10 CLOCK SPRING REMOVAL/INSTALLATION.)
2. Inspect for continuity between the clock spring terminals by using an ohmmeter.

○——○ : Continuity

Step	Terminal											
	1A	1B	2A	2B	2C	2D	3A	3B	4A	4B	4C	4D
1	○						○					
2		○						○				
3			○						○			
4				○						○		
5					○						○	
6						○						○

X5U810WAK

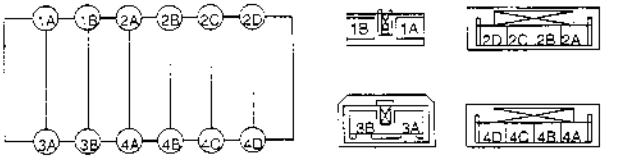

X5U810WAL

Note

- When terminals 3A and 3B are disconnected from the vehicle's main harness, they are shorted to prevent unexpected air bag deployment.

3. If not as specified, replace the clock spring.

PASSENGER AIR BAG DEACTIVATION (PAD) SWITCH REMOVAL/INSTALLATION

X5U810W08

1. Disconnect the negative battery cable.
2. Remove the center panel. (Refer to 09–17 CENTER PANEL REMOVAL/INSTALLATION.)
3. Push the hooks of PAD switch and pull the switch out.
4. Install in the reverse order of removal.

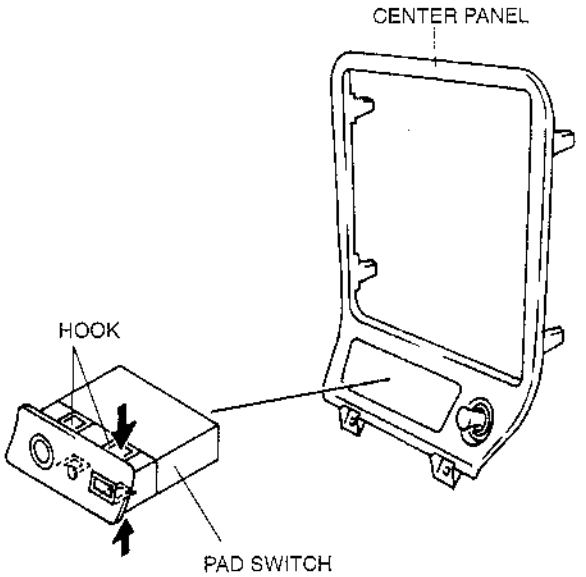

X5U810WB4

PASSENGER AIR BAG DEACTIVATION (PAD) SWITCH INSPECTION

X5U810W10

1. Disconnect the negative battery cable.
2. Remove the center panel. (Refer to 09–17 CENTER PANEL REMOVAL/INSTALLATION.)
3. Confirm that the PAD switch warning light bulb and the PAD switch illumination bulb are okay.
4. If the bulbs go out, replace them with new ones.
5. Inspect for continuity between PAD switch terminals by using an ohmmeter.

O—O : Continuity O—⊗—O : Bulb

Switch position	Terminal					
	A	H	B	G	D	E
ON	O—⊗—O		O—⊗—O			
OFF	O—⊗—O		O—⊗—O		O——O	

X5U810WB6

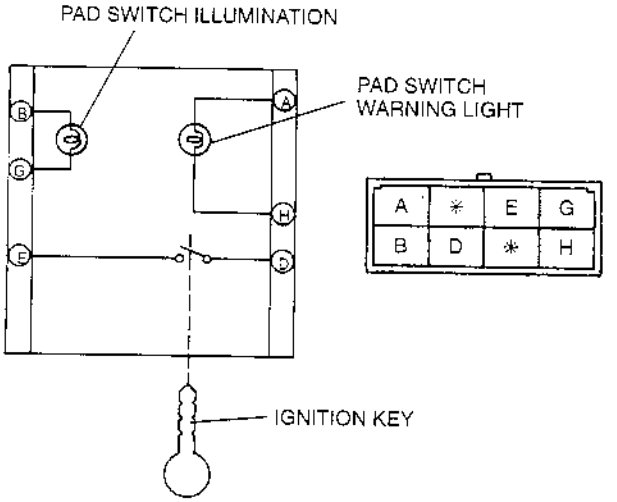

X5U810WB7

6. If not as specified, replace the PAD switch.

PASSENGER AIR BAG DEACTIVATION (PAD) SWITCH WARNING LIGHT BULB AND PASSENGER AIR BAG DEACTIVATION (PAD) SWITCH ILLUMINATION BULB REMOVAL/INSTALLATION

X5U810W09

1. Disconnect the negative battery cable.
2. Remove the center panel. (Refer to 09–17 CENTER PANEL REMOVAL/INSTALLATION.)
3. Remove in the order indicated in the table.
4. Install in the reverse order of removal.

1	PAD switch warning light bulb
2	PAD switch illumination bulb

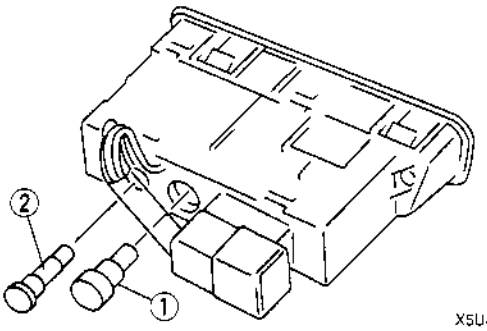

X5U810WB5

SAS CONTROL MODULE REMOVAL/INSTALLATION

X5U810W04

Warning

- **Handling the SAS control module improperly can accidentally deploy the air bag modules and which may seriously injure you. Read AIR BAG SYSTEM SERVICE WARNINGS before handling the SAS control module. (Refer to 08–10 AIR BAG SYSTEM SERVICE WARNINGS.)**

1. Turn the ignition switch to LOCK.
2. Disconnect the negative battery cable and wait for more than 1 **minute** to allow the backup power supply of the SAS control module to deplete its stored power.
3. Remove the dashboard. (Refer to 09–17 DASHBOARD REMOVAL/INSTALLATION.)
4. Remove in the order indicated in the table.
5. Install in the reverse order of removal.
6. Turn the ignition switch to ON.
7. Verify that the air bag system warning light illuminates for **approximately 6 seconds** then goes off.
8. If the air bag system warning light remains on, off, or repeats flashing after servicing, there are malfunctions in the system. Carry out the inspection again. (Refer to 08–01 AIR BAG SYSTEM ON-BOARD DIAGNOSIS.)

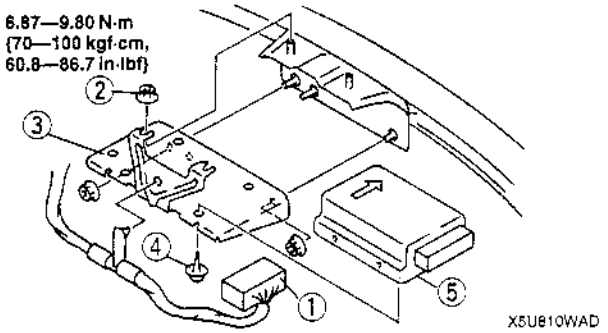

X5U810WAD

1	Connector
2	Nut ☞ Installation note
3	Bracket
4	Screw
5	SAS unit

Nut Installation Note

- Tighten the nuts in the order shown in the figure.

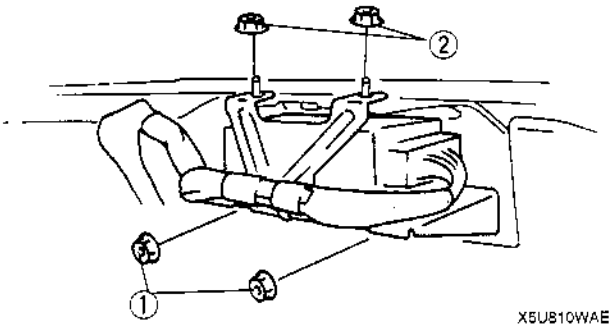

X5U810WAE

AIR BAG MODULE DEPLOYMENT AUTHORIZATION PROCEDURES

X5U810W1

1. After installing a new SAS control module, verify that the air bag system warning light flashes continuously **approximately 6 seconds** after the ignition switch is turned to ON.
2. If a diagnostic trouble code is indicated, perform the appropriate AIR BAG SYSTEM ON-BOARD DIAGNOSIS. (Refer to 08–01 AIR BAG SYSTEM ON-BOARD DIAGNOSIS.)
3. Turn the ignition switch to LOCK then back to ON while the air bag system warning light is flashing continuously. If the procedures have been performed correctly, the air bag system warning light illuminates, then goes off after **approximately 6 seconds**.
4. If it does not go off, perform the deployment authorization procedure again.

AIR BAG MODULE DEPLOYMENT PROCEDURES

X5U810W12

Warning

- **A live (undeployed) air bag module may accidentally deploy when it is disposed of and cause serious injury. Do not dispose of a live (undeployed) air bag module. If the SSTs (Deployment Tool and Harness Adapter) are not available, consult the nearest Mazda representative for assistance.**

Note

- When disposing of a deployed air bag, refer to AIR BAG MODULE DISPOSAL PROCEDURES. (Refer to 08–10 AIR BAG MODULE DISPOSAL PROCEDURES.)

Deployment Procedures for Inside of Vehicle

1. Inspect the **SST** (Deployment Tool). (Refer to 08–10 INSPECTION OF SST (DEPLOYMENT TOOL).)
2. Move the vehicle to an open space, away from strong winds, and close all of the vehicle's doors and windows.
3. Turn the ignition switch to LOCK.
4. Disconnect the negative battery cable and wait for more than **1 minute** to allow the backup power supply of the SAS control module to deplete its stored power.

Driver-side air bag module

1. Remove the column cover.
2. Disconnect the clock spring connector.
3. Connect the **SST** (Harness Adapter) to the clock spring as shown in the figure.

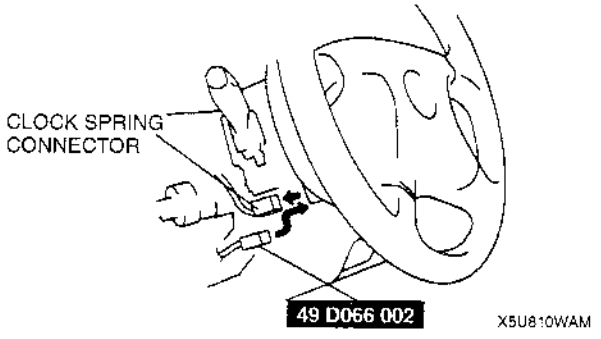

X5U810WAM

4. Connect the **SST** (Deployment Tool) to the **SST** (Harness Adapter).

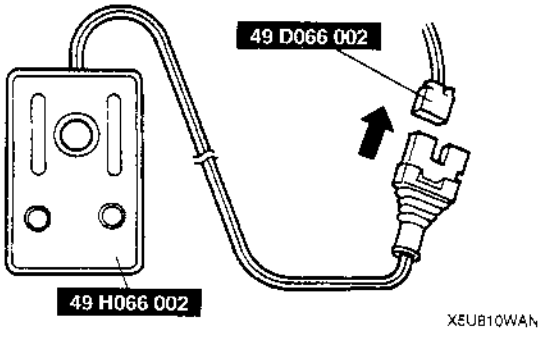

X5U810WAN

5. Connect the red clip of the **SST** (Deployment Tool) to the positive battery terminal and the black clip to the negative battery terminal.
6. Verify that the red light on the **SST** (Deployment Tool) is illuminated.
7. Make sure all persons are standing at least **6 m {20 ft}** away from the vehicle.
8. Press the activation switch on the **SST** (Deployment Tool) to deploy the air bag module.

Passenger-side air bag module

1. Remove the glove compartment.
2. Disconnect the passenger-side air bag module connector.
3. Connect the **SST** (Harness Adapter) to the passenger-side air bag module as shown in the figure.

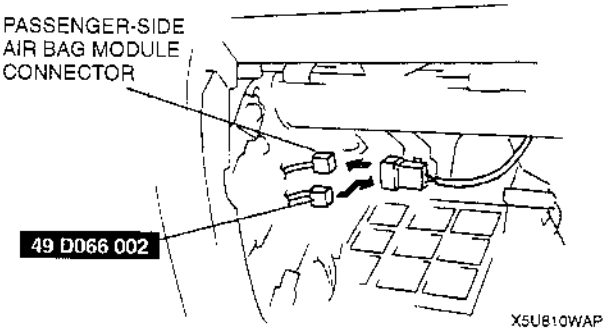

X5U810WAP

4. Connect the **SST** (Deployment Tool) to the **SST** (Harness Adapter).

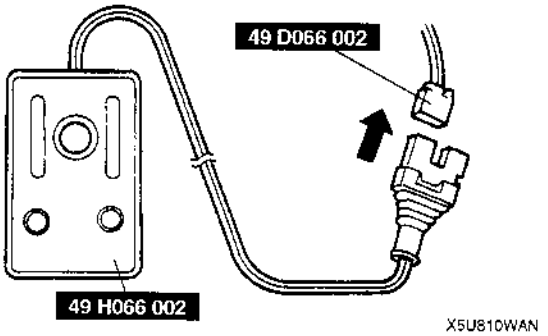

X5U810WAN

5. Connect the red clip of the **SST** (Deployment Tool) to the positive battery terminal and the black clip to the negative battery terminal.
6. Verify that the red light on the **SST** (Deployment Tool) is illuminated.
7. Make sure all persons are standing at least **6 m {20 ft}** away from the vehicle.
8. Press the activation switch on the **SST** (Deployment Tool) to deploy the air bag module.

Deployment Procedures for Outside of Vehicle

1. Inspect the **SST** (Deployment Tool). (Refer to 08–10 INSPECTION OF SST (DEPLOYMENT TOOL).)
2. Turn the ignition switch to LOCK.
3. Disconnect the negative battery cable and wait for more than **1 minute** to allow the backup power supply of the SAS control module to deplete its stored power.

Driver-side air bag module

1. Remove the driver-side air bag module. (Refer to 08–10 DRIVER-SIDE AIR BAG MODULE REMOVAL/INSTALLATION.)
2. For the standard type, install the bolts to the driver-side air bag module.

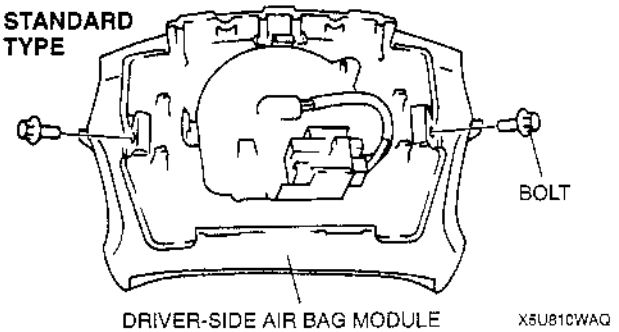

Warning

- **If the air bag module is not properly installed to the tire wheel, serious injury may occur when the module is deployed. When installing the air bag module to the tire wheel, make sure the front of the module is facing up.**

3. Place the driver-side air bag module on the center of the tire wheel with the front of the module facing up. To secure the standard type air bag module to the tire wheel, wrap the wire harness through the wheel and around the bolt at least 4 times. To secure the sport type air bag module to the tire wheel, wrap the wire harness through the wheel and the bolt installation hole at least 4 times.

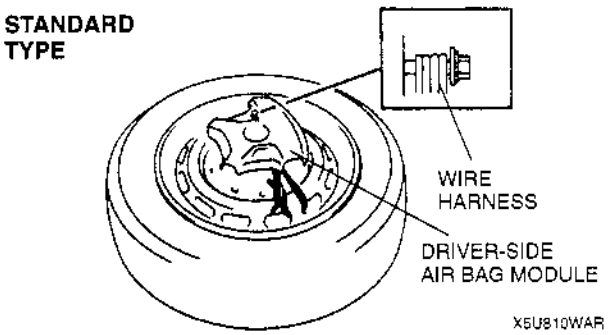

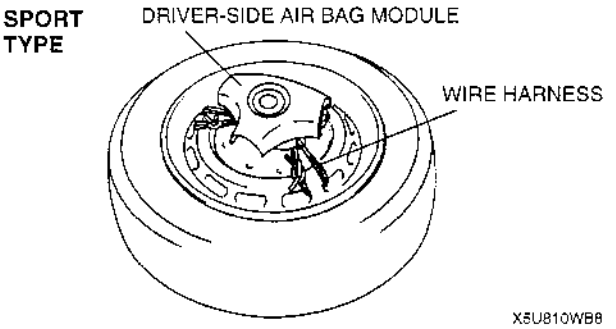

4. Connect the **SST** (Harness Adapter) to the driver-side air bag module as shown in the figure.

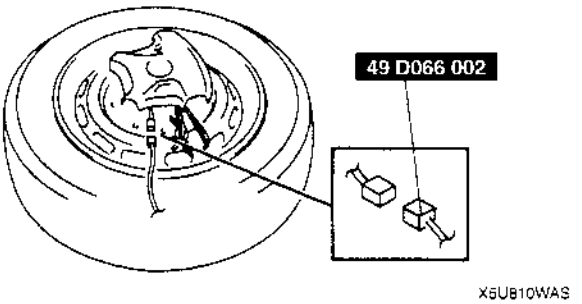

5. Stack 3 tires on top of the tire with the attached air bag module. Stack a tire that has a wheel on top of the 4 tires.

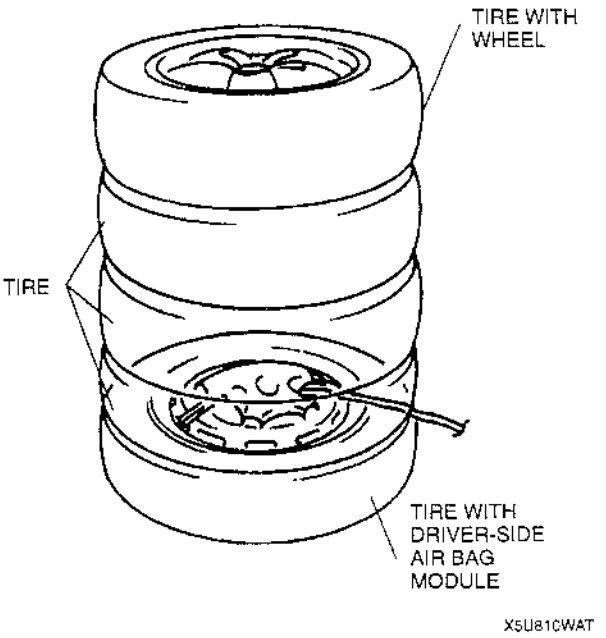

6. Tie all tires together with wire.

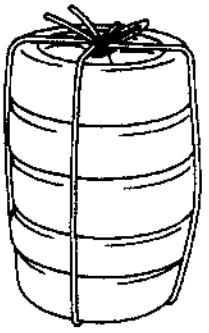

X5U810WAU

7. Connect the **SST** (Deployment Tool) to the **SST** (Harness Adapter).

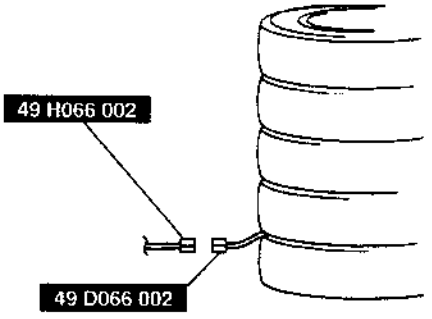

X5U810WAV

8. Connect the red clip of the **SST** (Deployment Tool) to the positive battery terminal and the black clip to the negative battery terminal.
9. Verify that the red light on the **SST** (Deployment Tool) is illuminated.

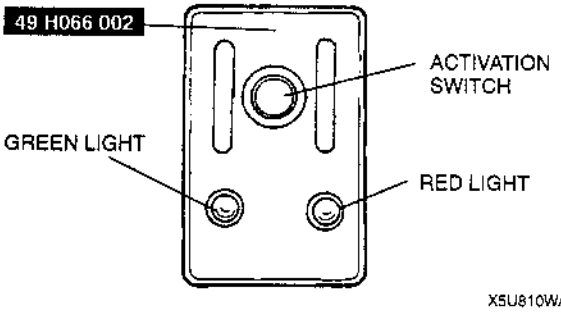

X5U810WAW

10. Make sure all persons are standing at least **6 m {20 ft}** away from the tire.
11. Press the activation switch on the **SST** (Deployment Tool) to deploy the air bag module.

Passenger-side air bag module

1. Remove the passenger-side air bag module. (Refer to 08–10 PASSENGER-SIDE AIR BAG MODULE REMOVAL/INSTALLATION.)
2. Install the bolts or nuts to the passenger-side air bag module.

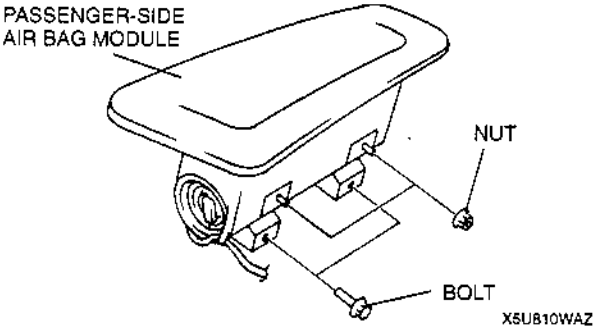

X5U810WAZ

Warning

- **If the air bag module is not properly installed to the tire wheel, serious injury may occur when the module is deployed. When installing the air bag module to the tire wheel, make sure the center of the module is facing the center of the tire.**

3. Tie the air bag module to the tire with the center of the module facing the center of the tire. Wrap the wire harness through the tire and around the air bag module bolt or nut at least 4 times.

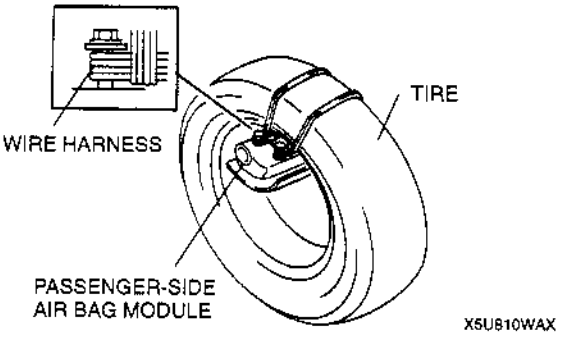

X5U810WAX

4. Connector the **SST** (Harness Adapter) to the passenger-side air bag module as shown.

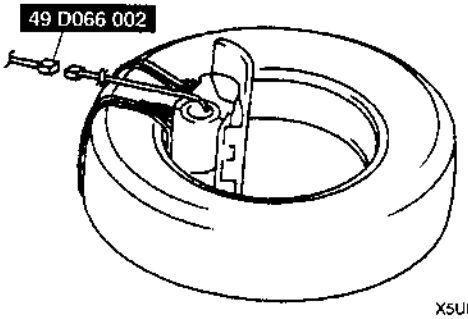

X5U810WAY

5. Stack the tire with the attached passenger-side air bag module on top of 2 tires. Stack a tire on top of the 3 tires. Stack a tire that has a wheel on top of the 4 tires.

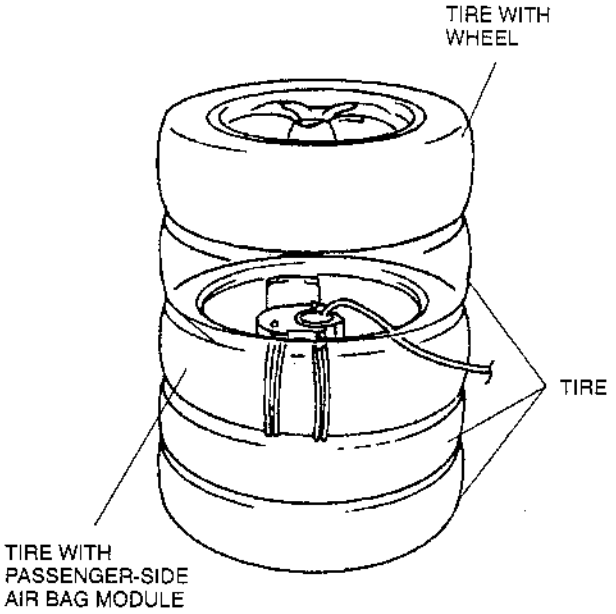

X5U810WB0

6. Tie all tires together with wire.

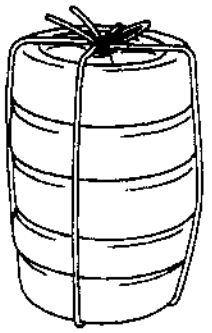

X5U810WAU

7. Connect the **SST** (Deployment Tool) to the **SST** (Harness Adapter).

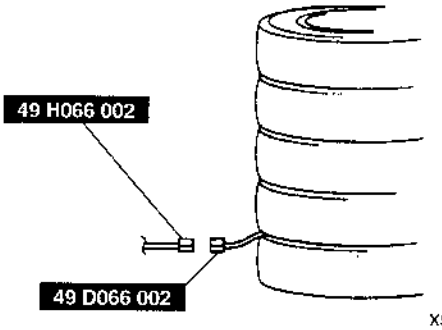

X5U810WAV

8. Connect the red clip of the **SST** (Deployment Tool) to the positive battery terminal and the black clip to the negative battery terminal.
9. Verify that the red light on the **SST** (Deployment Tool) is illuminated.

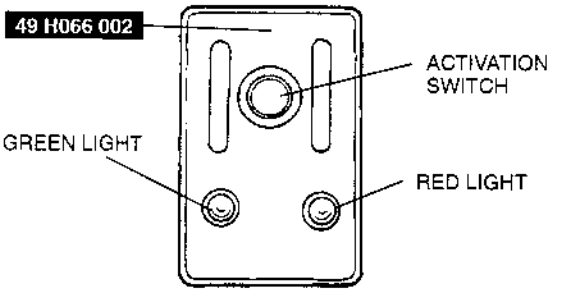

X5U810WAW

10. Make sure all persons are standing at least **6 m {20 ft}** away from the vehicle.
11. Press the activation switch on the **SST** (Deployment Tool) to deploy the passenger-side air bag module.

AIR BAG MODULE DISPOSAL PROCEDURES

X5U810W13

Warning
- **Before scrapping a vehicle with a live (undeployed) air bag module, deploy the air bag module. Never dispose of a live (undeployed) air bag module.**

Warning
- **The air bag is very hot immediately after it deploys. You can get burned. Do not touch the air bag module for at least 15 minutes after deployment.**

Warning
- **Pouring water on a deployed air bag is dangerous. The water will mix with the residual gasses to form a gas that can make breathing difficult. Do not pour water on the deployed air bag module.**

Warning
- **A deployed air bag module may contain deposits of sodium hydroxide, a caustic byproduct of the gas-generated combustion. If this substance gets into your eyes or on your hands, it can cause irritation and itching. When handling a deployed air bag module, wear gloves and safety glasses.**

1. Put on gloves and safety glasses.
2. Put the deployed air bag module in a plastic bag, seal it, and then dispose of it.

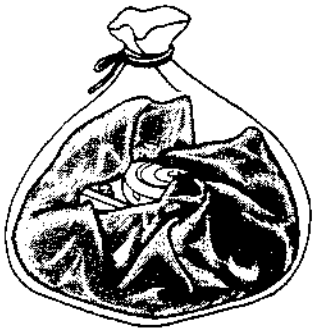

X5U810WB1

3. Wash your hands after removing your gloves.

INSPECTION OF SST (DEPLOYMENT TOOL)

X5U810W14

- Use the **SST** (Deployment Tool) to deploy a live air bag module before disposing of it.
- Before connecting the **SST** (Deployment Tool) to the clock spring or passenger-side air bag module, inspect the operation of the **SST** (Deployment Tool).

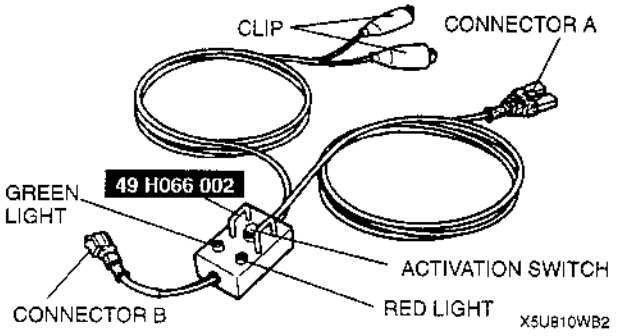

X5U810WB2

Inspection Procedure

1. Follow the steps below to verify that the **SST** (Deployment Tool) is operating correctly.

Step	Inspection procedure	Light condition	
		Green	Red
1	Connect red clip to positive battery terminal and black clip to negative battery terminal.	On	Off
2	Connect connectors A and B of **SST** (Deployment Tool).	Off	On
3	Press activation switch.	On	Off

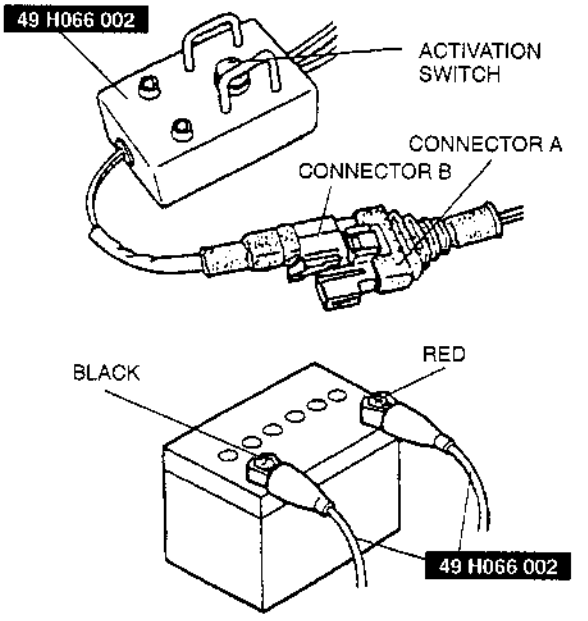

X5U810WB3

2. If not as specified, do not use the **SST** (Deployment Tool) because it may cause the air bag to unexpectedly deploy upon connection to the air bag module.

08–11 SEAT BELT

SEAT BELT INSPECTION

X5U811W02

Belt

1. Inspect the webbing for scars, tears, and wear.
2. Inspect the fittings for deformation and damage.
3. If a problem is found, replace the seat belt.

ELR

Caution

- **If the load limiter mechanism operates, the belt will no longer withdraw and retract normally. Replace the belt if the load limiter mechanism operates.**

1. Verify that the belt can be pulled out smoothly, and that it moves smoothly when worn.
2. Verify that the retractor locks when the belt is quickly pulled.

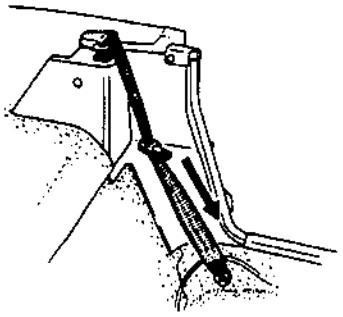

X5U811WA1

3. Remove the retractor. (Refer to 08–11 SEAT BELT REMOVAL/INSTALLATION.)
4. Hold the retractor as it would be installed.
5. Slowly incline the retractor while pulling out the belt.
6. Verify that the retractor locks at **approximately 30°** inclination.

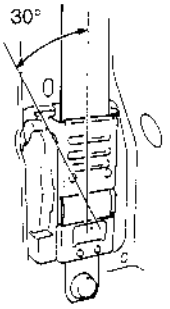

X5U811WA2

7. If not as specified, replace the seat belt.

ALR

1. Pull the belt out fully and the lock mode changes from ELR to ALR.
2. Verify that retractor makes a clicking sound as the belt slowly retracts. If no sound is heard, the lock mode has not changed to ALR. If necessary, repeat the above step 1.
3. Verify that the belt locks when pulled.
4. Verify that the lock mode changes to ELR when the belt fully retracts.
5. If not as specified, replace the seat belt.

Seat Belt Switch

1. Remove the driver's side quarter trim. (Refer to 09–17 QUARTER TRIM REMOVAL/INSTALLATION.)
2. Disconnect the seat belt switch connector.
3. Slide the driver's side seat backward as far as possible.
4. Inspect for continuity between the seat belt switch terminals by using an ohmmeter.

○—○ : Continuity

Test condition	Terminal	
	A	B
Insert the tongue into the buckle		
Unbuckle the seat belt and allow it to retract fully	○	○

X5U811WA4

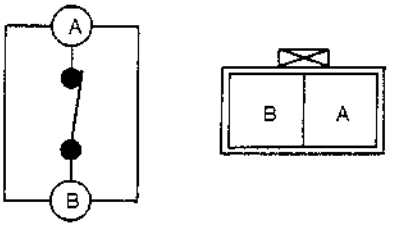

X5U811WA5

5. If not as specified, replace the seat belt.

SEAT BELT REMOVAL/INSTALLATION

X5U811WC1

Caution

- **The ELR has a spring that will unwind if the retractor's cover is removed. The spring cannot be rewound by hand. If this occurs, the ELR will not work properly. Therefore, do not disassemble the retractor.**

1	Anchor cover
2	Seat belt switch connector
3	Seat belt
4	Bezel

1. Disconnect the negative battery cable.
2. Remove the quarter trim. (Refer to 09–17 QUARTER TRIM REMOVAL/INSTALLATION.)
3. Remove in the order indicated in the table.
4. Install in the reverse order of removal.

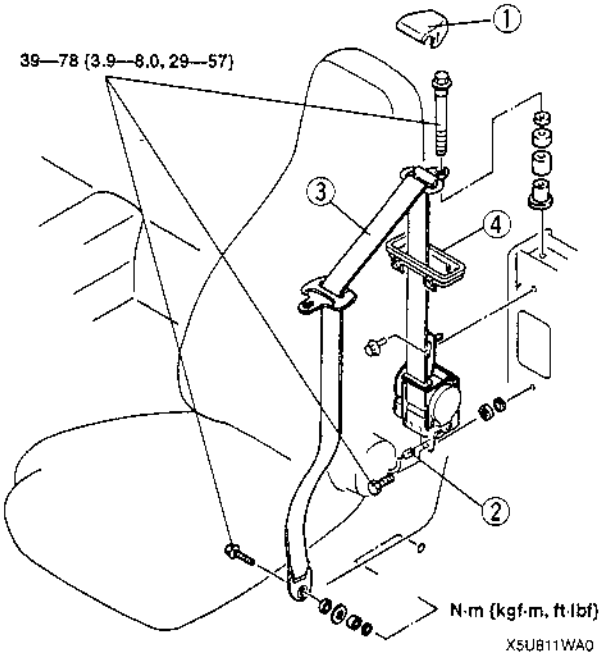

BUCKLE REMOVAL/INSTALLATION

X5U811W04

1. Remove as indicated in the table.
2. Install in the reverse order of removal.

1	Buckle

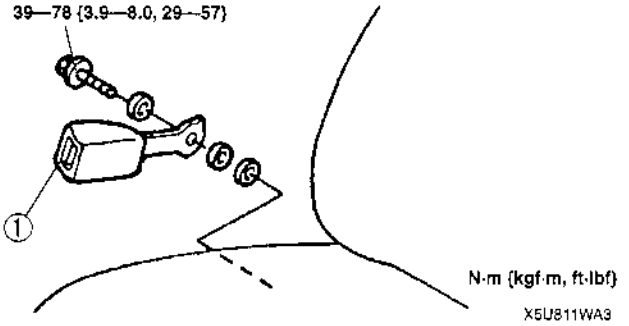

08–60 SERVICE TOOLS

08 RESTRAINTS SST

X5U860W01

49 H066 002 Deployment tool  TH066002X	49 0839 285 Fuel & Thermometer Checker 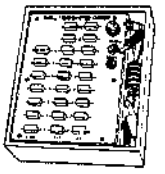 T0839285X	49 D066 002 Harness adapter 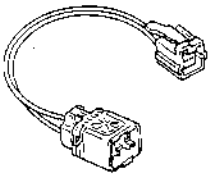 TD066002X

BODY & ACCESSORIES

09
SECTION

09–10 BODY PANELS

FUEL-FILLER LID ADJUSTMENT

X5U910W09

1. Measure the gap and height between the fuel-filler lid and the body panel.

   Clearance
   a: 2.5—4.5 mm {0.10—0.17 in}
   b: –0.5—1.5 mm {–0.01—0.05 in}

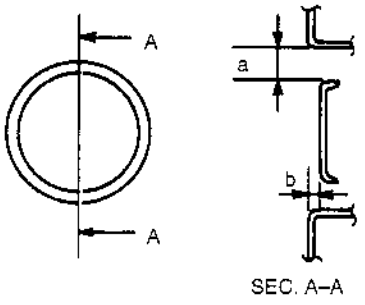

X5U910WAB

2. If not as specified, loosen the fuel-filler lid installation bolts and reposition the fuel-filler lid.
3. Tighten the fuel-filler lid installation bolts.

FUEL-FILLER LID REMOVAL/INSTALLATION

1. Remove in the order indicated in the table.
2. Install in the reverse order of removal.
3. Adjust the fuel-filler lid. (Refer to 09–10 FUEL-FILLER LID ADJUSTMENT.)

X5U910WC0

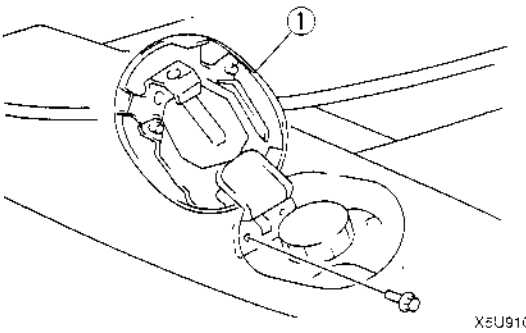

X5U910WAA

1	Fuel-filler lid

HOOD ADJUSTMENT

1. Measure the gap and height between the hood and the body.

Clearance
a: 3.8—6.2 mm {0.15—0.24 in}
b: –2.5—0.5 mm {–0.098—0.019 in}
c: 5.0—10.0 mm {0.20—0.39 in}
d: 3.8—6.2 mm {0.15—0.24 in}
e: –1.5—0.5 mm {–0.059—0.019 in}

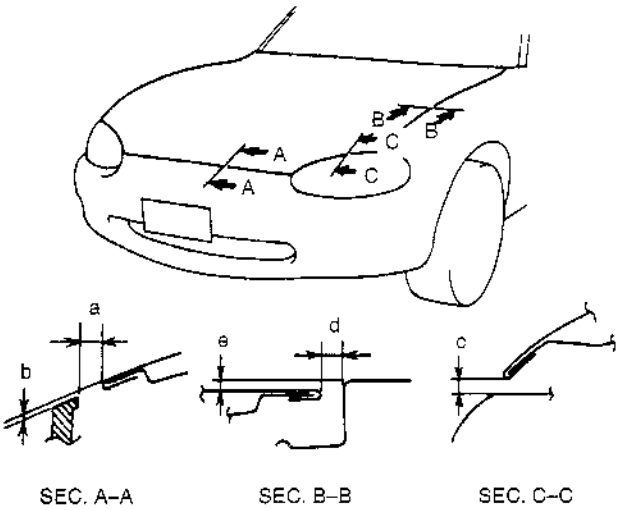

X5U910WA1

2. If not as specified, adjust the gap and height.
3. Adjust the hood lock after the hood has been aligned. (Refer to 09–14 HOOD LOCK ADJUSTMENT.)

X5U910WC2

Gap Adjustment

1. Loosen the hood installation nuts and reposition the hood.

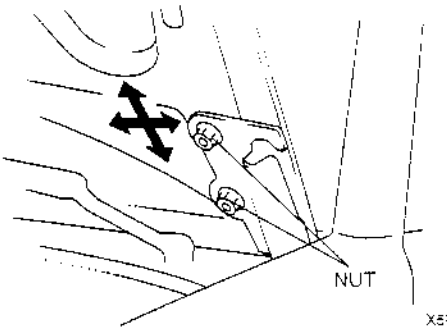

X5U910WA2

2. Tighten the hood installation nuts.

Height Adjustment

- Turn the stop rubber to adjust the height of the hood.

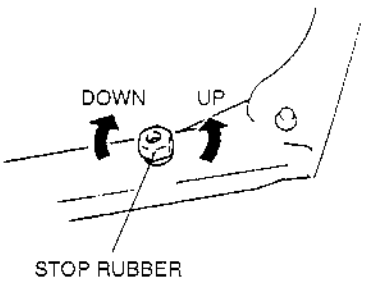

X5U910WA3

HOOD REMOVAL/INSTALLATION

X5U910W01

Warning
- **The hood may fall and injure you. Always perform these procedures together with at least another person.**

1. To remove the hood hinge, remove the front fender panel. (Refer to 09–10 FRONT FENDER PANEL REMOVAL/INSTALLATION.)
2. Remove in the order indicated in the table.
3. Install in the reverse order of removal.
4. Adjust the hood. (Refer to 09–10 HOOD ADJUSTMENT.)

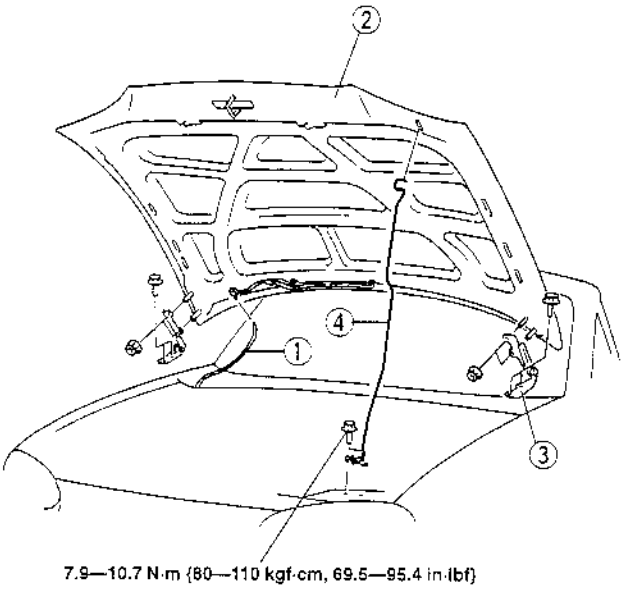

X5U910WA0

1	Windshield washer pipe
2	Hood
3	Hood hinge
4	Hood stay

09

TRUNK LID ADJUSTMENT

X5U910W05

Clearance

1. Measure the gap between the trunk lid and the body panel.

Clearance
a: 3.5—6.5 mm {0.14—0.25 in}
b: 3.8—6.2 mm {0.15—0.24 in}

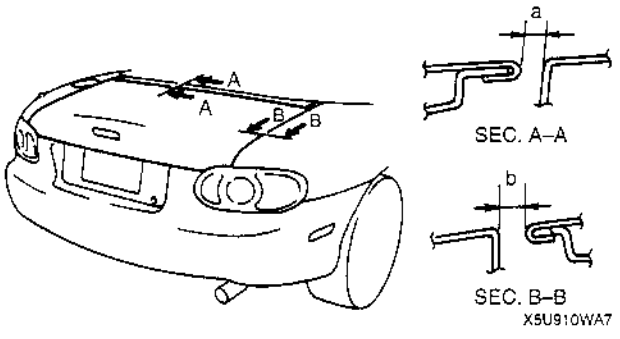

X5U910WA7

2. If not as specified, loosen the trunk lid installation nuts and reposition the trunk lid.
3. Tighten the trunk lid installation nuts.

Tightening torque
7.9—10.7 N·m
{80—110 kgf·cm, 69.5—95.4 in·lbf}

4. Adjust the trunk lid striker after the trunk lid has been aligned. (Refer to 09–14 TRUNK LID LOCK ADJUSTMENT.)

Tension

- Slide the balance spring to the desired position as described below by using a tape-wrapped screwdriver.

Note
- The trunk lid should rise **50—300 mm {2.0—11.8 in}** when the trunk lid is unlocked.

Tension	Hook bracket	Set position	
		a	b
Standard	Right side	○	
	Left side		○
Increase	Right side	○	
	Left side	○	
Decrease	Right side		○
	Left side		○

○ : Position

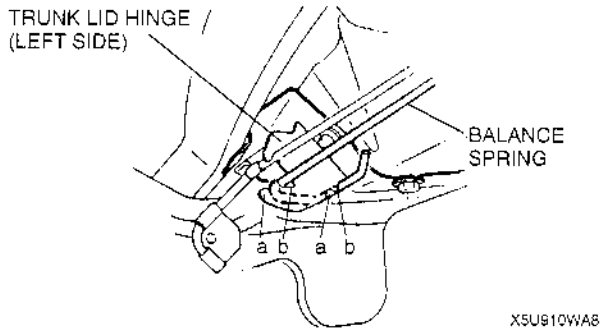

TRUNK LID REMOVAL/INSTALLATION

X5U910W04

Warning

- **Removing the balance spring without supporting the trunk lid can be dangerous. The trunk lid may fall and injure you. Open the trunk lid fully and support it before removing the balance spring. Perform these procedures together with another person.**

1. Disconnect the negative battery cable.
2. Remove the rear package trim. (Refer to 09–17 REAR PACKAGE TRIM REMOVAL/INSTALLATION.)
3. Remove in the order indicated in the table.
4. Install in the reverse order of removal.
5. Adjust the trunk lid. (Refer to 09–10 TRUNK LID ADJUSTMENT.)

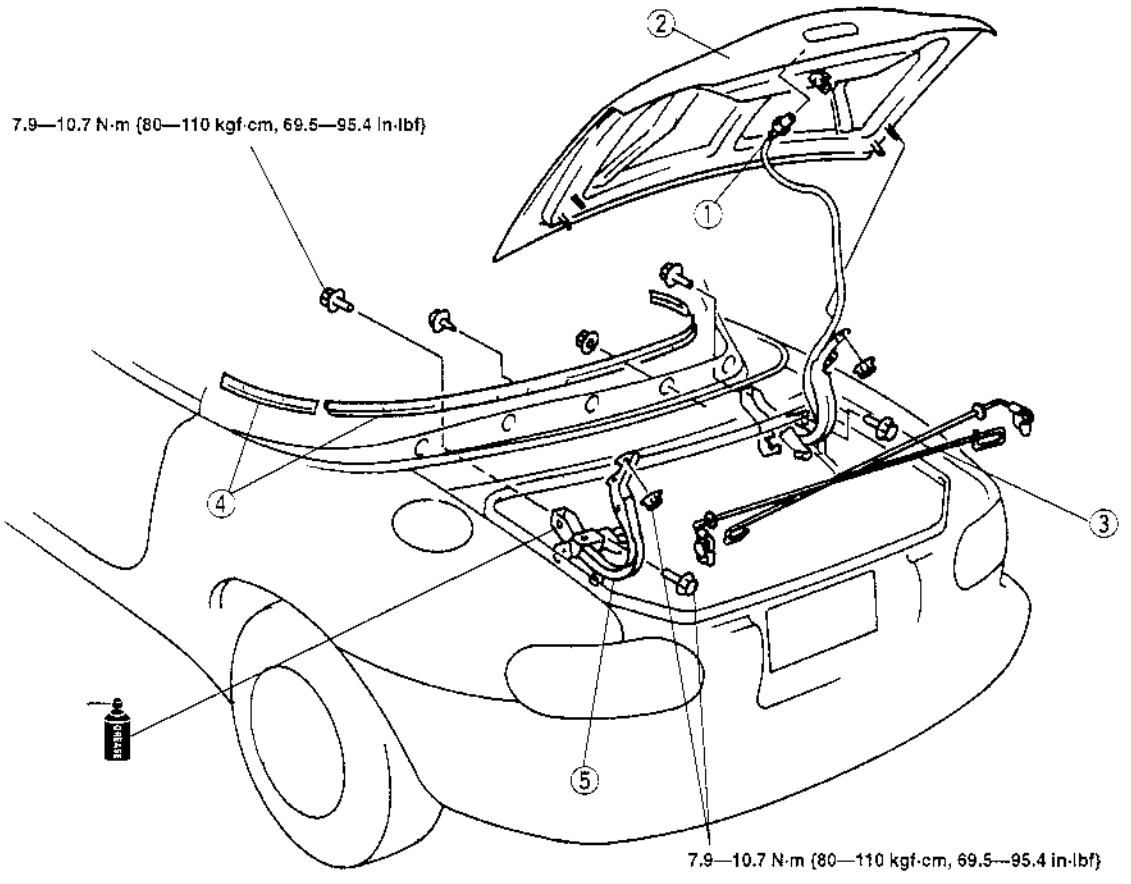

1	Bulb
2	Trunk lid
3	Balance spring ☞ Removal Note

4	Set plate
5	Trunk lid hinge

Balance Spring Removal Note

Note
- The balance springs are under high tension.

1. Carefully lift the balance spring by using a tape-wrapped screwdriver.
2. Remove the balance spring.

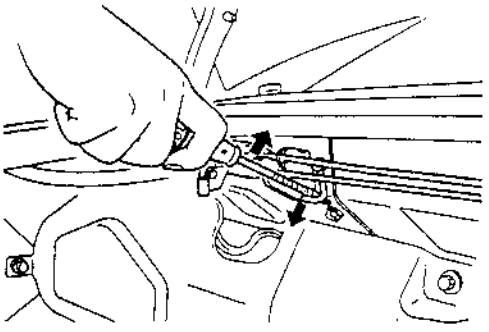

FRONT BUMPER REMOVAL/INSTALLATION

X5U910W10

1. Disconnect the negative battery cable.
2. Remove in the order indicated in the table.
3. Install in the reverse order of removal.

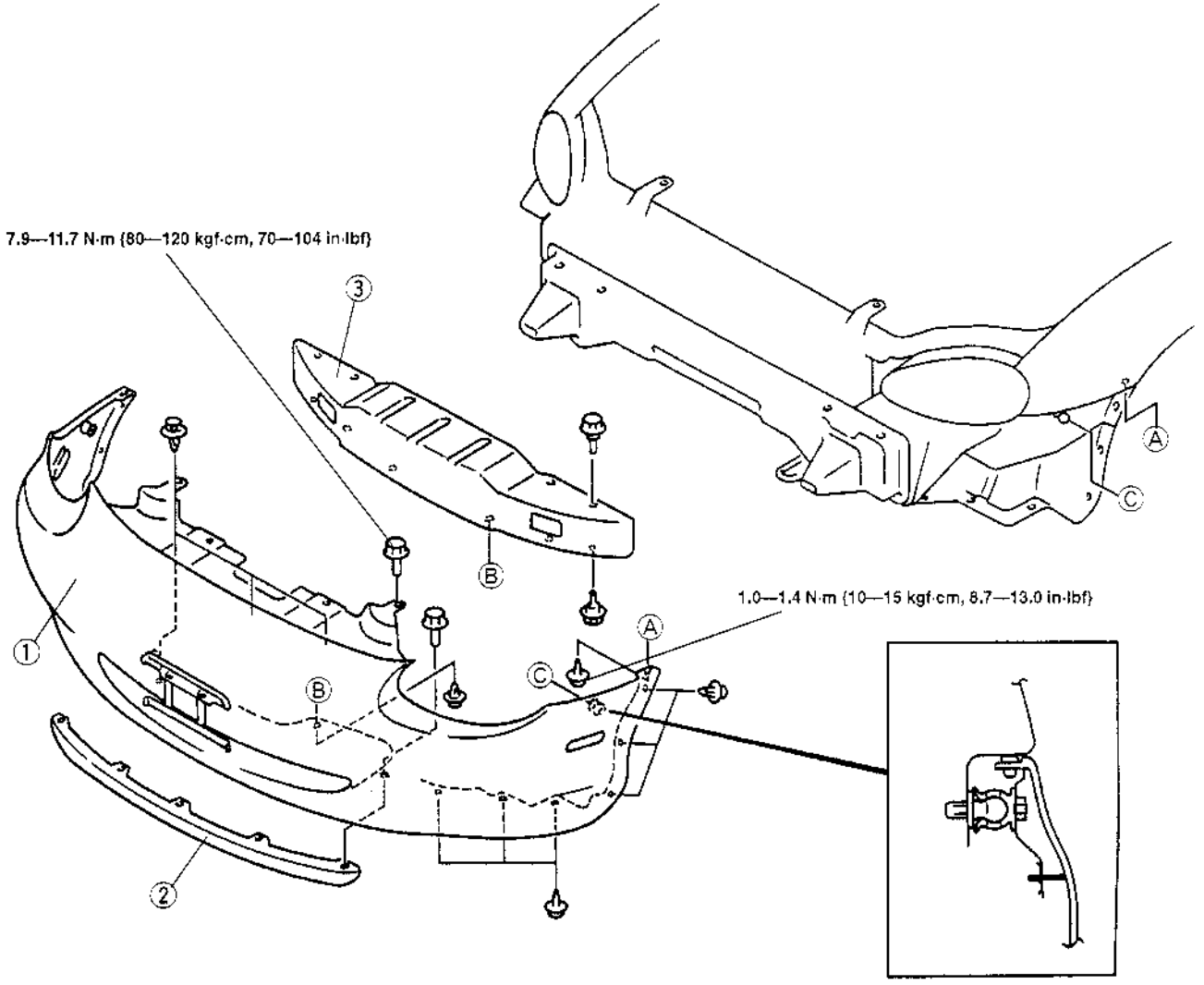

1	Front bumper
2	Air dam skirt
3	Bumper reinforcement

REAR BUMPER REMOVAL/INSTALLATION

X5U910W07

1. Disconnect the negative battery cable.
2. Remove the license plate.
3. Remove the rear combination light. (Refer to 09–18 REAR COMBINATION LIGHT REMOVAL/INSTALLATION.)
4. Remove in the order indicated in the table.
5. Install in the reverse order of removal.

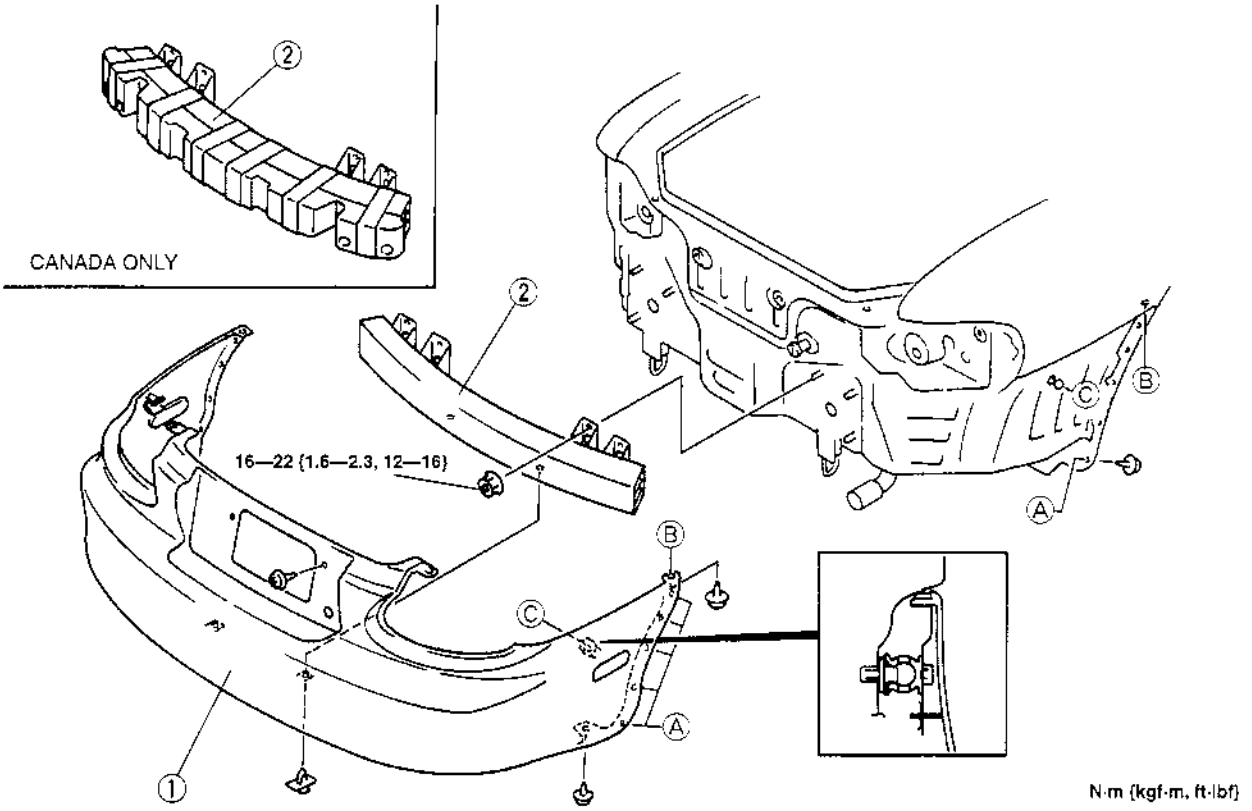

X5U910WA9

1	Rear bumper	2	Bumper reinforcement

FRONT FENDER PANEL REMOVAL/INSTALLATION

X5U910W03

1. Disconnect the negative battery cable.
2. Remove the front bumper. (Refer to 09–10 FRONT BUMPER REMOVAL/INSTALLATION.)
3. Remove in the order indicated in the table.
4. Install in the reverse order of removal.

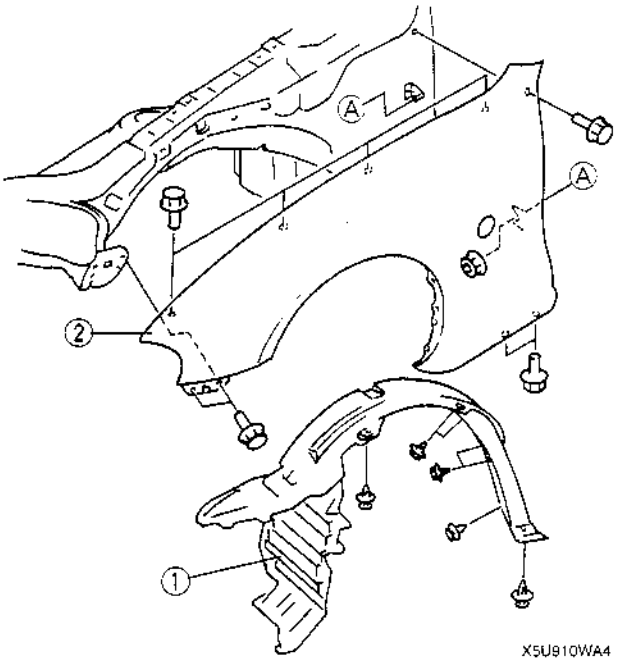

1	Mud guard
2	Front fender panel

09–11 DOORS AND LIFTGATE

DOOR ADJUSTMENT

X5U911W01

1. Measure the clearance between the door and body.

   Clearance
   a: 4.0—6.0 mm {0.16—0.23 in}
   b: –1.0—1.0 mm {–0.039—0.039 in}

2. If not as specified, loosen the door hinge installation bolts or the door lock striker installation screws, and reposition the door.
3. Tighten the bolts or screws.

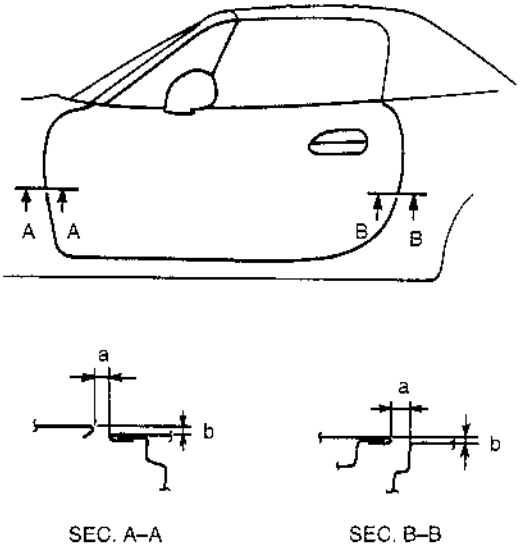

X5U911WA0

09

DOOR REMOVAL/INSTALLATION

1. Disconnect the negative battery cable.
2. To remove the door hinge, remove the front fender panel. (Refer to 09–10 FRONT FENDER PANEL REMOVAL/INSTALLATION.)
3. To remove the checker, remove the door speaker. (Refer to 09–20 DOOR SPEAKER REMOVAL/INSTALLATION.)
4. Remove in the order indicated in the table.
5. install in the reverse order of removal.
6. Adjust the door. (Refer to 09–11 DOOR ADJUSTMENT.)

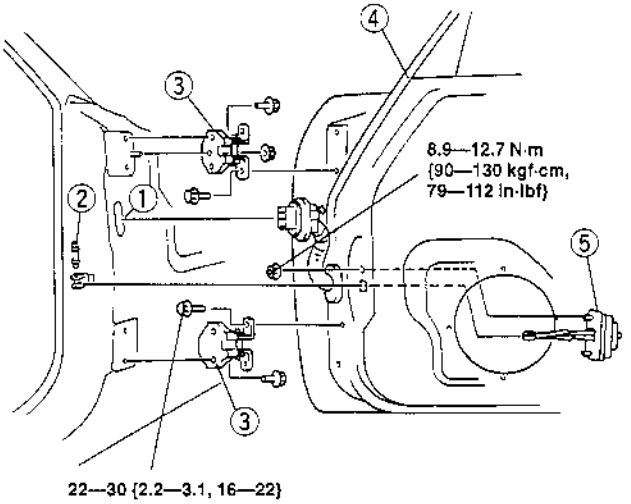

N·m {kgf·m, ft·lbf}

X5U911WA1

1	Connector ☞ Removal Note ☞ Installation Note
2	Checker pin
3	Door hinge
4	Door
5	Checker

X5U911W02

Connector Removal Note

1. Pull the pin out until it stops.
2. Disconnect the connector.

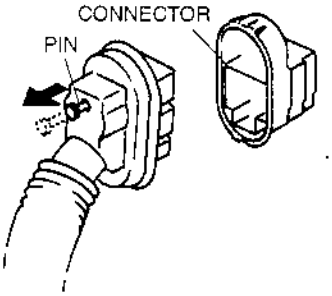

X5U911WA2

Connector Installation Note

1. Push the pin until it stops.
2. Connect the connector.
3. Repush the pin until it stops and locks the connector.

DOOR DISASSEMBLY/ASSEMBLY

X5U911W03

1. Raise the front edge of the door glass **225 mm {8.86 in}** from the fully-lowered position.
2. Disconnect the negative battery cable.
3. Remove the door trim. (Refer to 09–17 DOOR TRIM REMOVAL/INSTALLATION.)
4. Disassemble in the order indicated in the table.
5. Assemble in the reverse order of disassembly.
6. Adjust the door glass. (Refer to 09–12 DOOR GLASS ADJUSTMENT.)

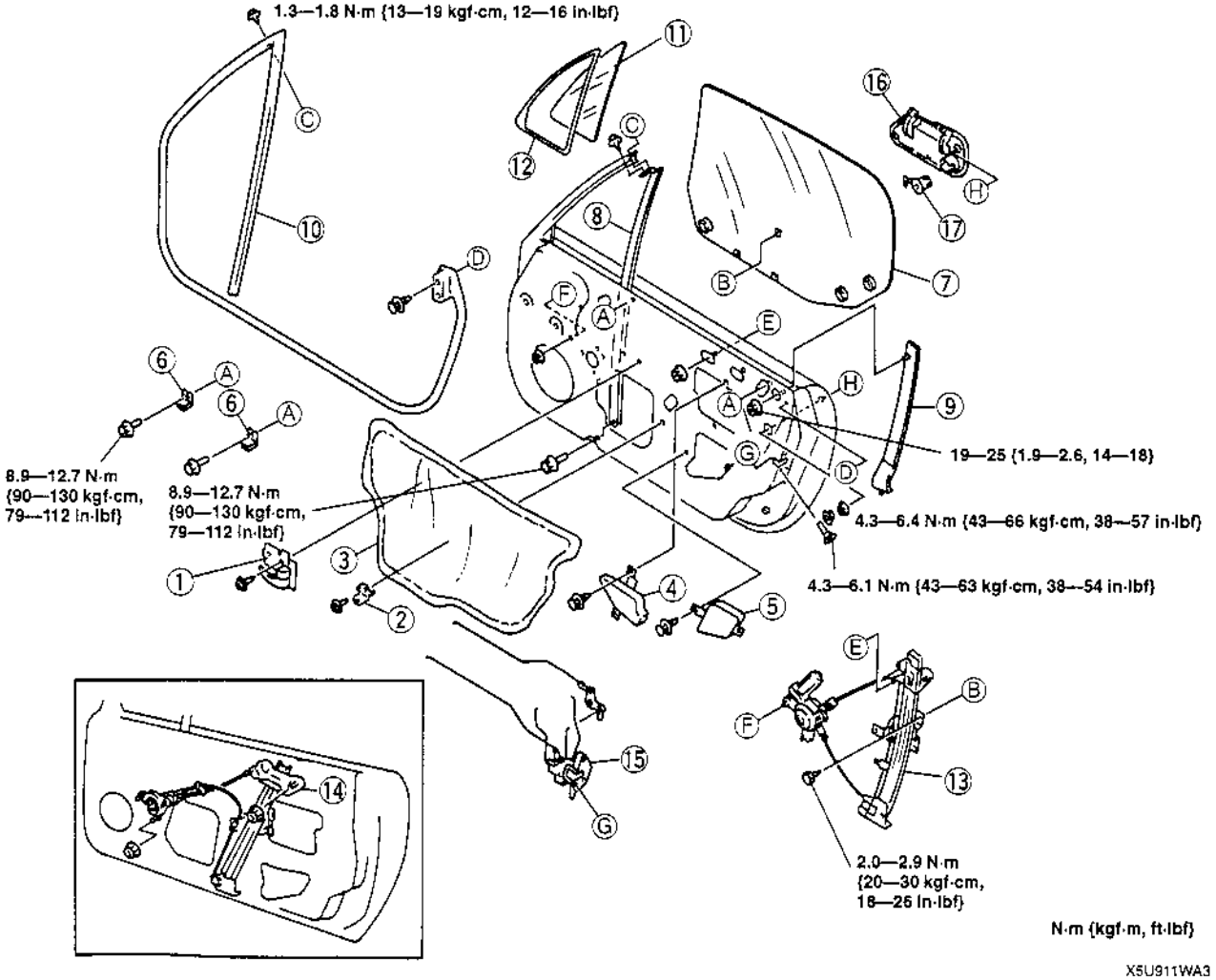

X5U911WA3

1	Inner handle
2	Bracket
3	Door screen
4	Pad A
5	Pad B
6	Glass stopper
7	Door glass
8	Front glass guide
9	Rear glass guide

10	Door weatherstrip
11	Door quarter glass
12	Door quarter glass weatherstrip
13	Power window regulator
14	Manual window regulator
15	Door lock
16	Outer handle
17	Door key cylinder

09–12 GLASS/WINDOWS/MIRRORS

DOOR GLASS ADJUSTMENT

1. Adjust the clearance between the upper edge of the door glass and the ventilator glass weatherstrip.

Clearance	Nominate (mm {in})	Minimum (mm {in})	Maximum (mm {in})
a	0 {0}	–0.5 {–0.01}	1.0 {0.03}

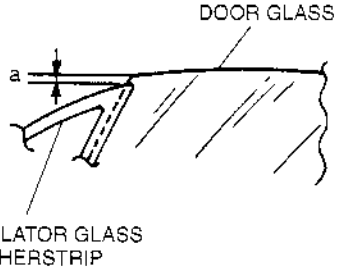

X5J912WC7

2. If vehicle has a convertible top, adjust the retainer. (Refer to 09–16 RETAINER ADJUSTMENT.)
3. Adjust the convertible top. (Refer to 09–16 TOP LOCK ADJUSTMENT.)

X5U912WC2

4. Adjust the detachable hardtop. (Refer to 09–16 TOP LOCK ADJUSTMENT.)
5. Raise the door glass fully and adjust it as there is no clearance with the retainer weatherstrip.
6. Remove the retainer weatherstrip.
7. Adjust the door glass vertically.
8. Adjust the door glass forward/backward.
9. Adjust the door glass inward/outward.
10. Verify the door glass is in correct position when it is fully raised.
11. Install the weatherstrip.
12. Verify the door glass raises and lowers smoothly with the door closed.

Note

- The front retainer installation hole is named retainer installation hole No.1, and the bottom hole is named retainer installation hole No.8 (convertible top) or retainer installation hole No.6 (detachable hardtop).

Vertical Adjustment

1. Measure the upper edge of the door glass and the retainer.

Clearance	Nominate (mm {in})	Minimum (mm {in})	Maximum (mm {in})
a	9.6 {0.38}	6.6 {0.26}	12.6 {0.49}
b	9.3 {0.37}	6.3 {0.25}	12.3 {0.48}

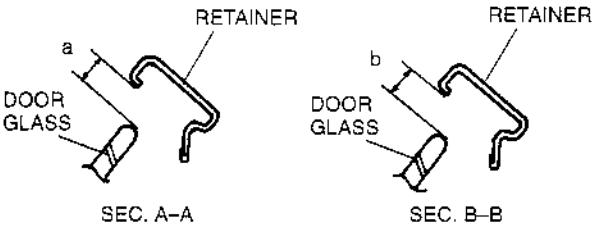

X5U912WA3

CONVERTIBLE TOP

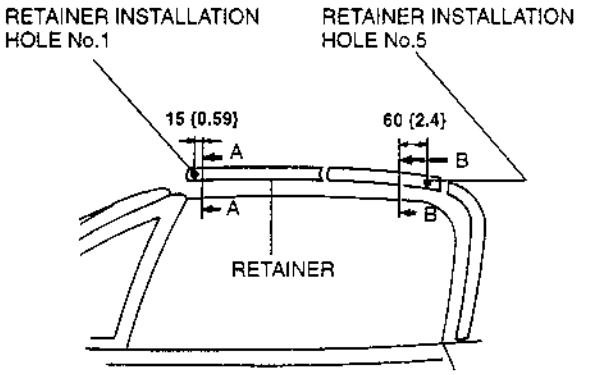

mm {in}

X5U912WA1

2. If not as specified, loosen the glass stopper installation bolts, move the glass stopper up or down and reposition the door glass.

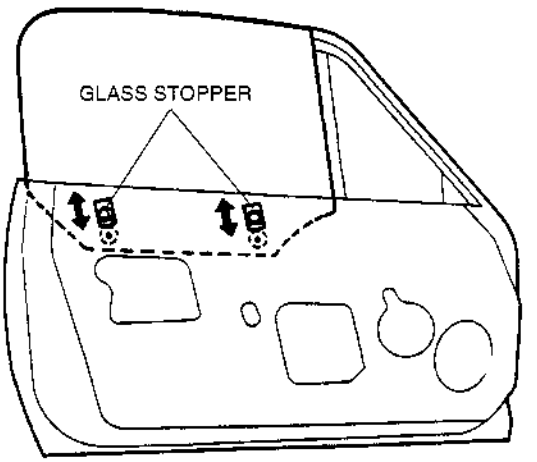

X5U912WA4

3. Tighten the bolts.

DETACHABLE HARDTOP

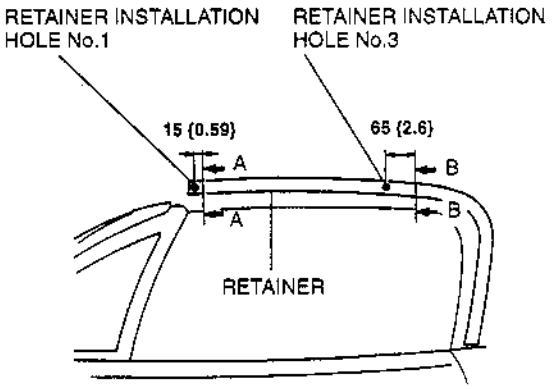

mm {in}

X5U912WA2

Forward/Backward Adjustment

1. Measure the rear edge of the door glass and the retainer.

Clearance	Nominate (mm {in})	Minimum (mm {in})	Maximum (mm {in})
a	12.5 {0.492}	9.5 {0.375}	15.5 {0.610}
b	12.1 {0.476}	9.1 {0.359}	15.1 {0.594}

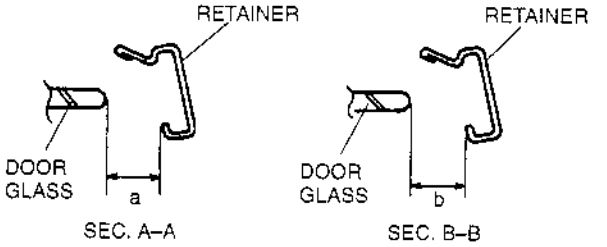

X5U912WA7

2. If not as specified, loosen the upper side of the window regulator installation nuts and that of the rear glass guide installation nuts, move the window regulator and the rear glass guide forward or backward and reposition the door glass.

CONVERTIBLE TOP

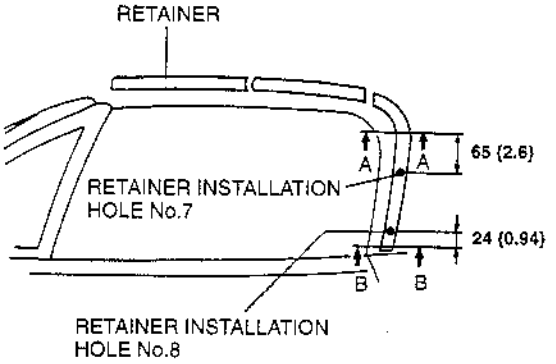

mm {in}

X5U912WA5

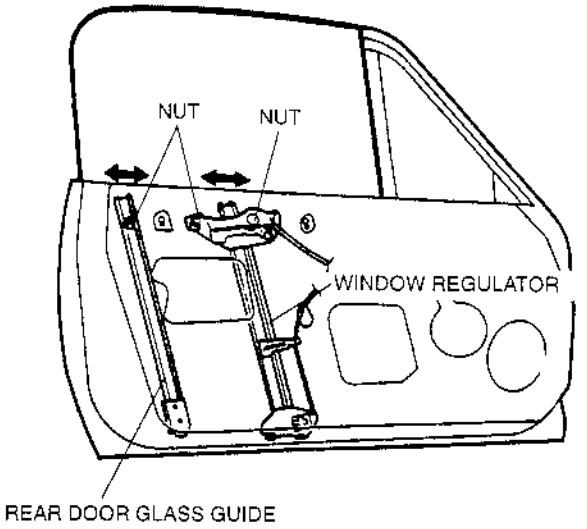

X5U912WA8

3. Tighten the nuts.

DETACHABLE HARDTOP

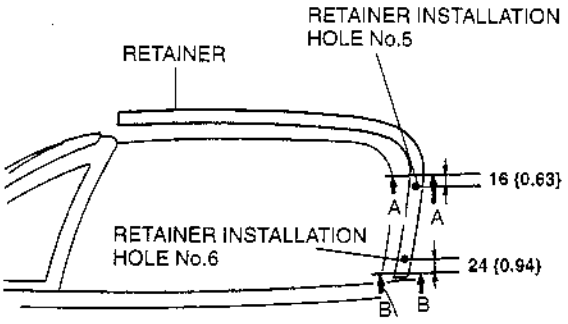

mm {in}

X5U912WA6

Inward/Outward Adjustment

1. Measure the upper and rear edge of the door glass and the retainer.

Clearance	Nominate (mm {in})	Minimum (mm {in})	Maximum (mm {in})
a	9.6 {0.38}	6.6 {0.26}	12.6 {0.49}
b	7.8 {0.31}	4.8 {0.19}	10.8 {0.42}
c	6.2 {0.24}	3.2 {0.13}	9.2 {0.36}
d	10.8 {0.43}	7.8 {0.31}	13.8 {0.54}

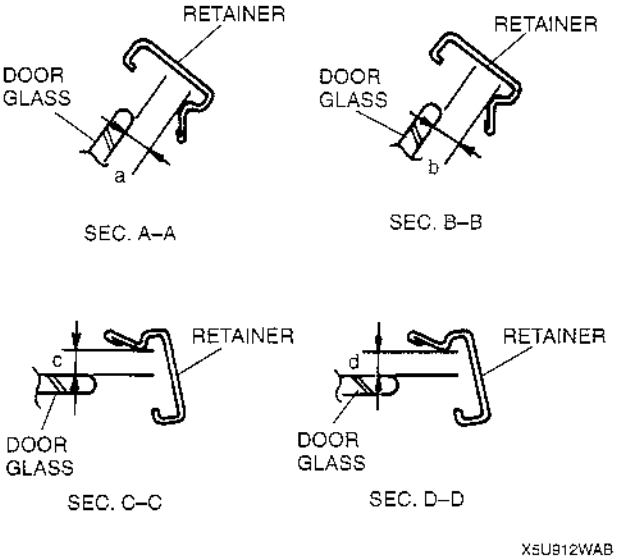

CONVERTIBLE TOP

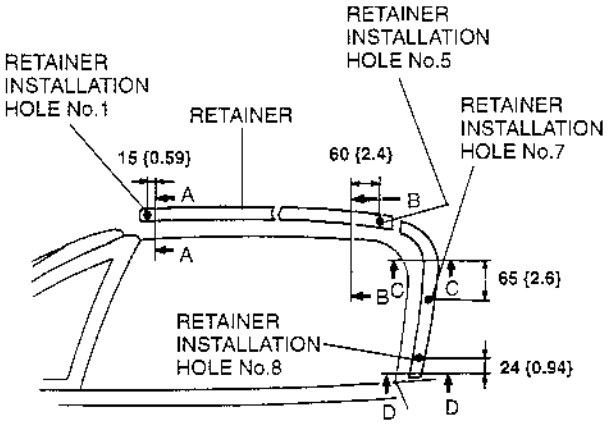

2. If not as specified, loosen the lower side of the window regulator installation nuts and that of the rear glass guide installation nuts, move the window regulator and the rear glass guide inward or outward and reposition the door glass.

DETACHABLE HARDTOP

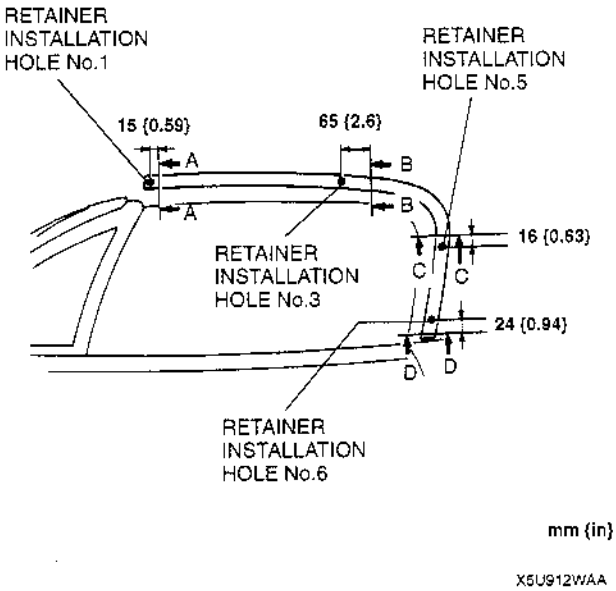

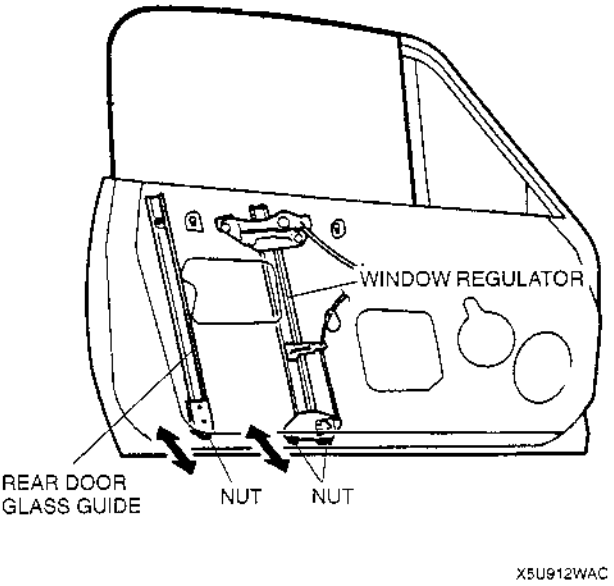

3. Tighten the nuts.

DOOR GLASS AND GUIDE REMOVAL/INSTALLATION

X5U912W01

1. Raise the front edge of the door glass **225 mm {8.86 in}** from the fully-lowered position.
2. Disconnect the negative battery cable.
3. Remove the door screen. (Refer to 09–11 DOOR DISASSEMBLY/ASSEMBLY.)
4. Remove in the order indicated in the table.
5. Install in the reverse order of removal.
6. Adjust the door glass. (Refer to 09–12 DOOR GLASS ADJUSTMENT.)

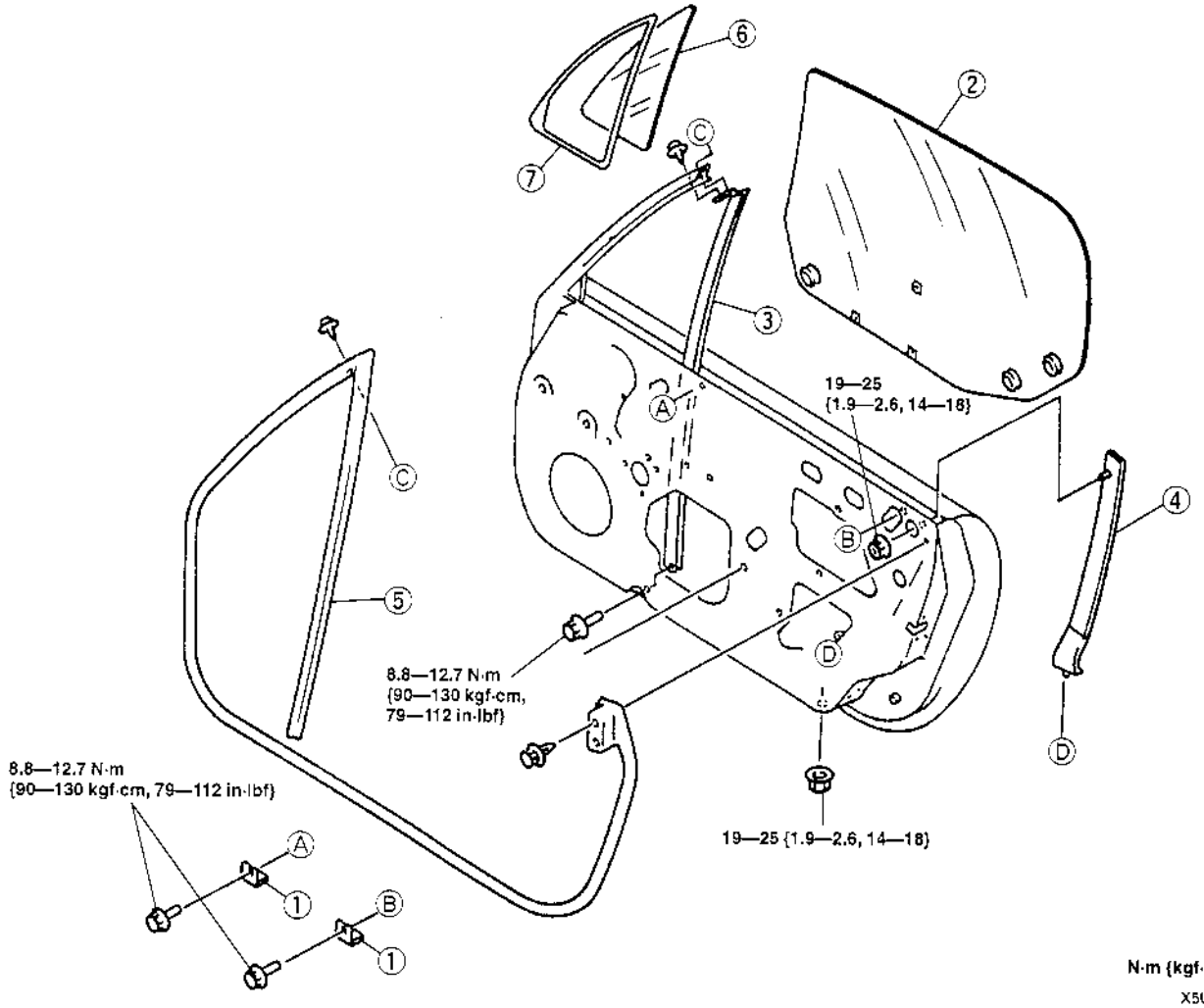

1	Glass stopper
2	Door glass
3	Front glass guide
4	Rear glass guide

5	Door weatherstrip
6	Ventilator glass
7	Ventilator glass weatherstrip

POWER WINDOW REGULATOR REMOVAL/INSTALLATION

X5U912W04

1. Remove the front glass guide. (Refer to 09–12 DOOR GLASS AND GUIDE REMOVAL/INSTALLATION.)
2. Disconnect the negative battery cable.
3. Remove in the order indicated in the table.
4. Install in the reverse order of removal.
5. Adjust the door glass. (Refer to 09–12 DOOR GLASS ADJUSTMENT.)

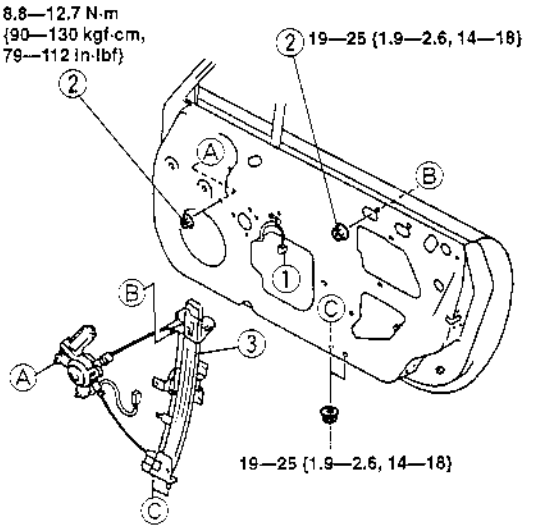

N·m {kgf·m, ft·lbf}

X5U912WAE

1	Connector
2	Nut
3	Power window regulator

POWER WINDOW REGULATOR DISASSEMBLY

X5U912W05

1. Tighten the adjusting bolt with pliers and loosen the cable.

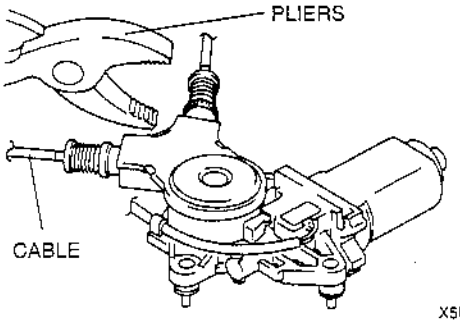

X5U912WAF

2. Disassemble the lower cable guide from the lower bracket with pliers.

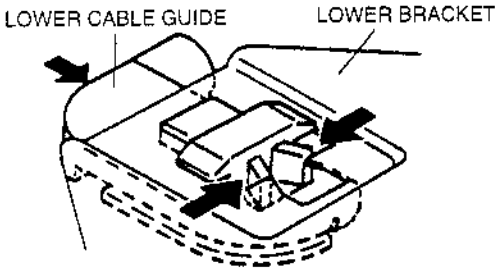

X5U912WAG

3. Disassemble the upper cable guide from the upper bracket.

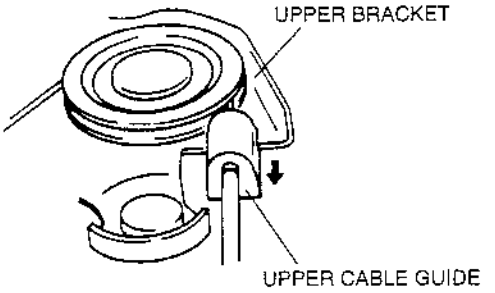

X5U912WAH

4. Disassemble the drum cover.
5. Take out the drum and disassemble the cable.

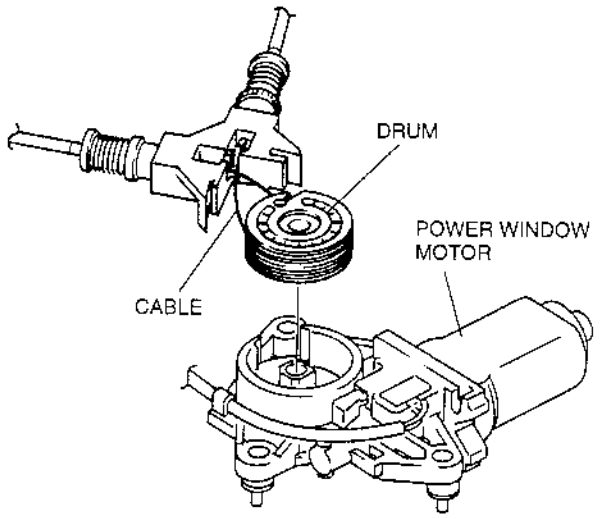

X5U912WAJ

6. Pull the ends of the cables and disassemble from the carrier plate one at a time.

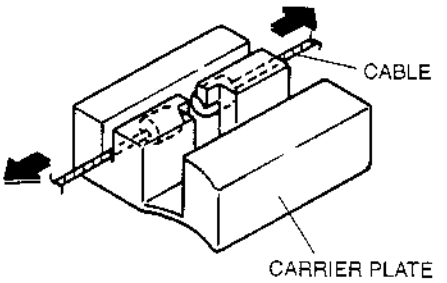

X5U912WAK

7. Disassemble the adjusting bolts.

POWER WINDOW REGULATOR ASSEMBLY

1. Tighten the adjusting bolts fully.
2. Assemble the ends of the cables to the carrier plate.
3. Insert the cables into the adjusting bolts.
4. Wind the cable around the top part of the drum three times and the bottom part twice or around the top part twice and the bottom part three times, and assemble into the power window motor. Taking care to prevent the cable from getting caught between the drum and the motor and the motor housing, carefully assemble the cable onto the upper bracket pulley.

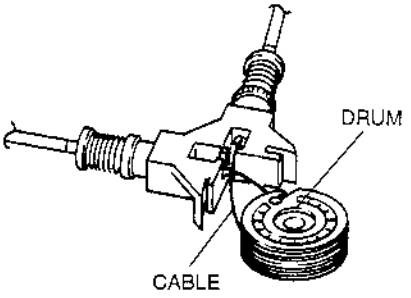

X5U912WAL

5. Verify that the ends of the cables are inserted into the adjusting bolts, shift the lower cable guide until a clicking sound is heard, and assemble to the lower bracket.
6. Apply grease to the parts shown in the figure.

X5U912W06

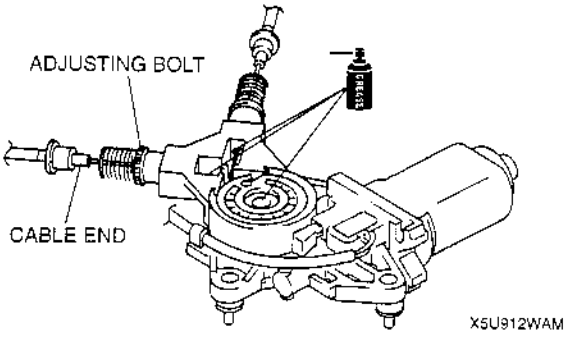

X5U912WAM

7. Assemble the drum cover.
8. For the upper part, pull the (A) part of the cable and for the lower part, pull the (B) part of the cable, and adjust the adjusting bolts making sure the coil springs don't bend.

Adjustment range
A: 0.5—7.5 mm {0.1—0.2 in}

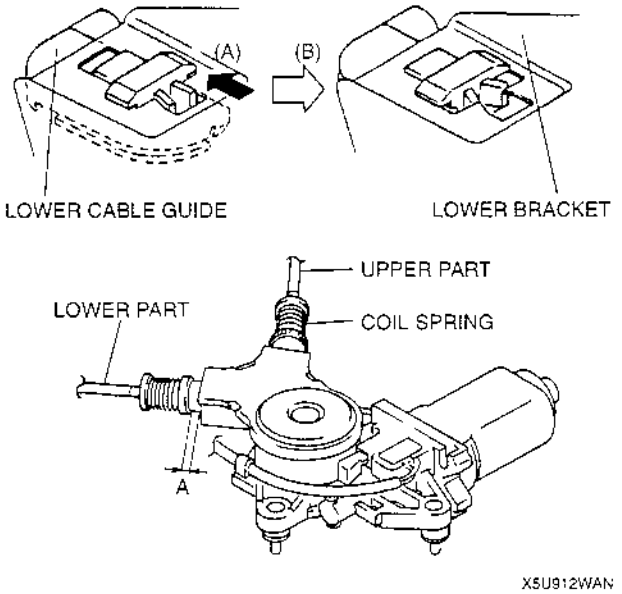

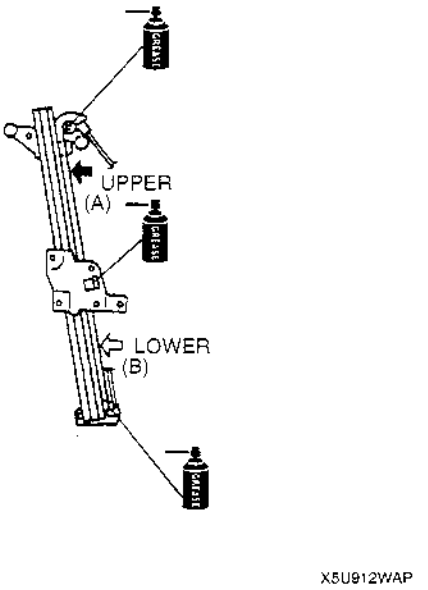

9. Fix the adjusting bolts with the thread lock.
10. Apply grease to places where the cable moves along the pulley and to the ends of the cables.
11. After assembling, verify that the cable isn't damaged.

POWER WINDOW MOTOR INSPECTION

1. Remove the power window motor. (Refer to 09–12 POWER WINDOW REGULATOR DISASSEMBLY.)
2. Apply battery positive voltage to the power window motor terminals and inspect the operation of the power window motor.

Connection		Motor operation
B+	GND	
A	B	Turn left (Up)
B	A	Turn right (Down)

X5U912W03

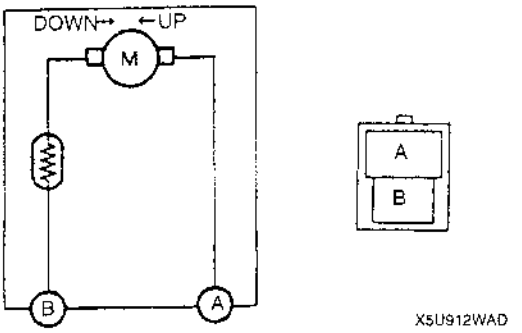

3. If not as specified, replace the power window motor.

MANUAL WINDOW REGULATOR REMOVAL/INSTALLATION

X5U912W07

1. Remove the front glass guide. (Refer to 09–12 DOOR GLASS AND GUIDE REMOVAL/INSTALLATION.)
2. Remove in the order indicated in the table.
3. Install in the reverse order of removal.
4. Adjust the door glass. (Refer to 09–12 DOOR GLASS ADJUSTMENT.)

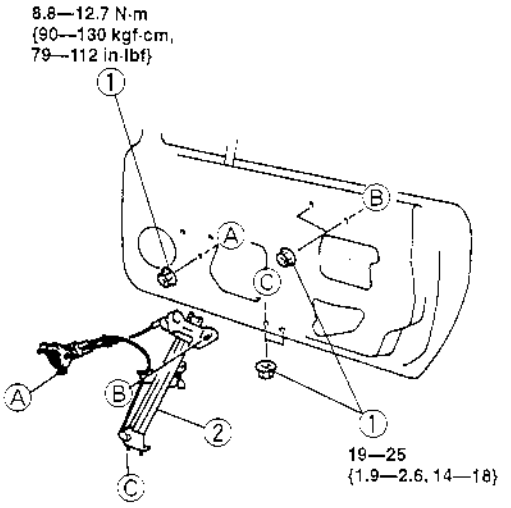

N·m {kgf·m, ft·lbf}

X5U912WAQ

1	Nut
2	Manual window regulator

POWER WINDOW SWITCH REMOVAL/INSTALLATION

X5U912W08

1. Disconnect the negative battery cable.
2. Remove the console. (Refer to 09–12 CONSOLE REMOVAL/INSTALLATION.)
3. Grasp the clip of the power window switch from the reverse side of the console to remove the power window switch.
4. Install in the reverse order of removal.

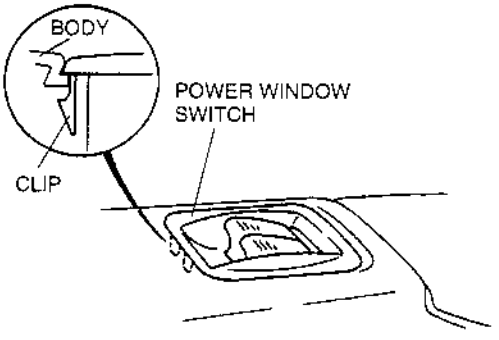

X5U912WAR

POWER WINDOW SWITCH INSPECTION

X5U912W10

1. Disconnect the negative battery cable.
2. Remove the power window switch. (Refer to 09–12 POWER WINDOW SWITCH REMOVAL/INSTALLATION.)
3. Inspect for the continuity between the power window switch terminals by using an ohmmeter.

○—○ : Continuity

Switch position		Terminal					
		A	B	C	D	E	F
OFF		○	○	○		○	○
Driver's side	Close	○	○	○	○	○	
	Open	○	○	○	○		○
Passenger's side	Close	○	○	○	○	○	○
	Open	○	○	○	○	○	○

X5U912WAS

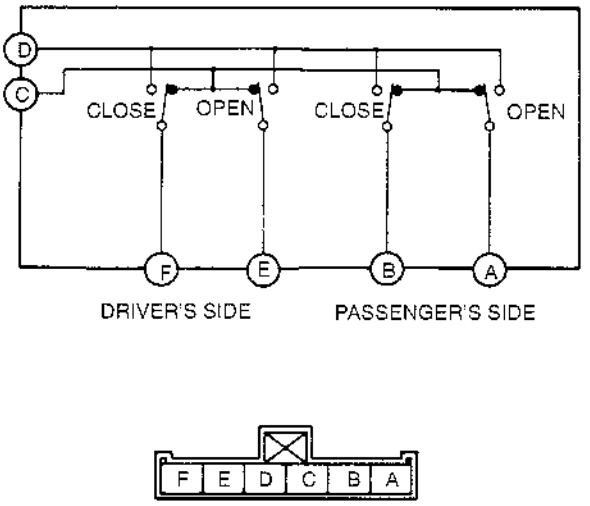

X5U912WAT

4. If not as specified, replace the power window switch.

REGULATOR HANDLE REMOVAL

X5U912W11

1. Remove the regulator handle clip by using a rag as shown.

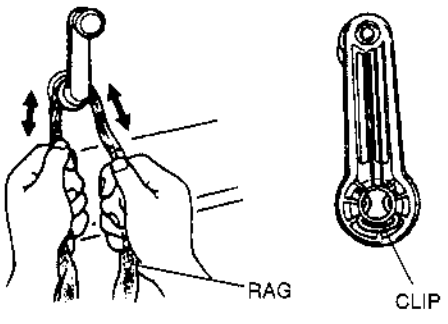

X5U912WAU

2. Remove the regulator handle.

REGULATOR HANDLE INSTALLATION

X5U912W12

1. Install the clip in the regulator handle.
2. Set the door glass at the fully-raised position and push the regulator handle on as shown.

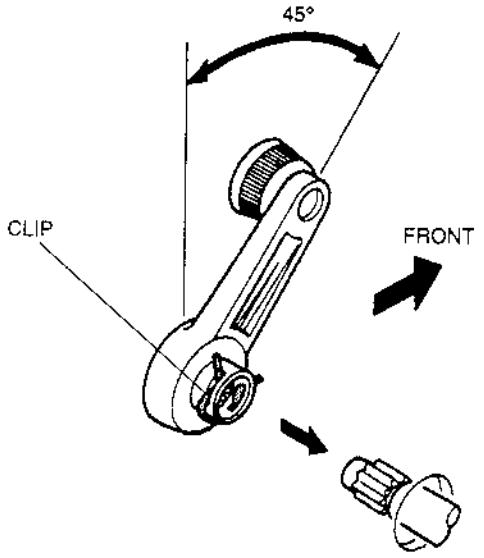

X5U912WAV

REAR WINDOW GLASS REMOVAL

X5U912W13

Detachable Hardtop

Note
- The rear window molding is a replacement part.

1. Remove the rear window molding.
2. Apply protective tape along the edge of the body to protect it from damage.
3. Remove the rear window glass installation nuts.
4. Make a hole through the sealant and the dam from the inside of the vehicle by using an awl.

Warning
- **Using piano wire with bare hands can cause injury. Always wear gloves when using piano wire.**

5. Pass the **SST** (piano wire) through the hole.

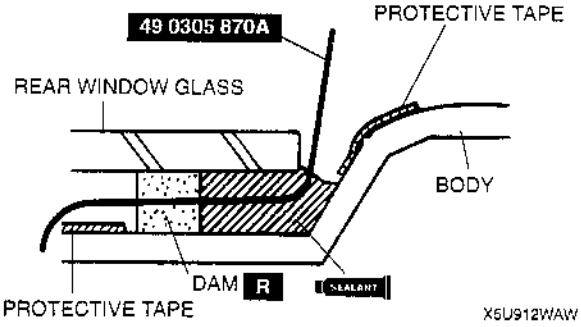

X5U912WAW

6. Wind each end of the **SST** (piano wire) around a bar.

Note
- Use the entire length of piano wire to prevent it from breaking when cutting through the sealant.

7. Working with another person, saw through the sealant around the edge of the glass.

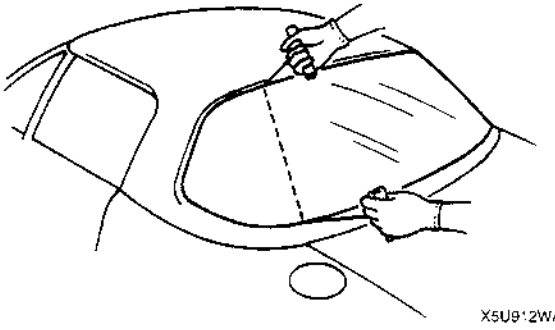

X5U912WAX

Warning
- **Using a razor knife with bare hands can cause injury. Always wear gloves when using a razor knife.**

8. Use a razor knife to cut the places of rear window glass installation nuts where the piano wire will not cut.

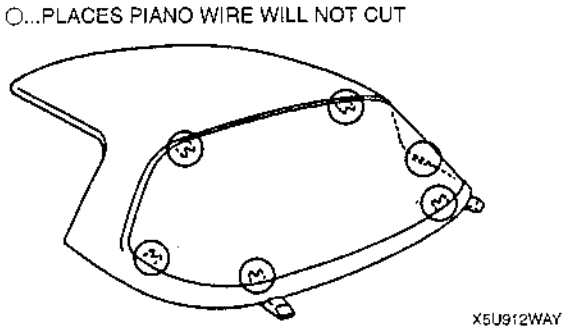

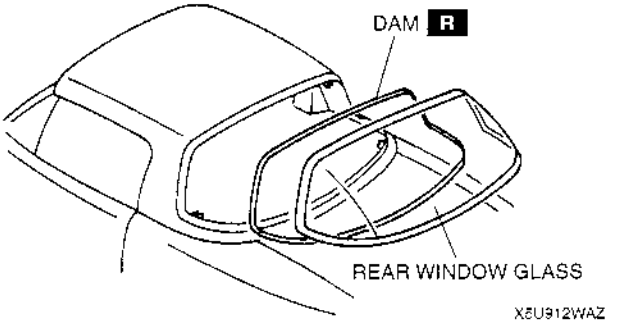

9. Remove the rear window glass.
10. Remove the dam.

REAR WINDOW GLASS INSTALLATION

Detachable Hardtop

Warning
- **Using a razor knife with bare hands can cause injury. Always wear gloves when using a razor knife.**

Caution
- **To prevent the sealant from cracking or the glass from being pushed out by air pressure if a door is closed, open all of the windows and leave them open until the sealant has hardened.**

1. Cut away the old sealant by using a razor knife so that **1—2 mm {0.04—0.07 in}** thickness of sealant remains around the circumference of the frame. If all the sealant has come off in any one place, apply some primer after degreasing, and allow it **30 minutes** to dry. Then put on new sealant to create a **2 mm {0.08 in}** layer.
2. Clean and degrease an **approximately 50.0 mm {1.97 in}** wide strip around the circumference of the glass and the bonding area on the body.
3. Securely bond a dam around the circumference of the glass **8.0 mm {0.31 in}** from the edge.

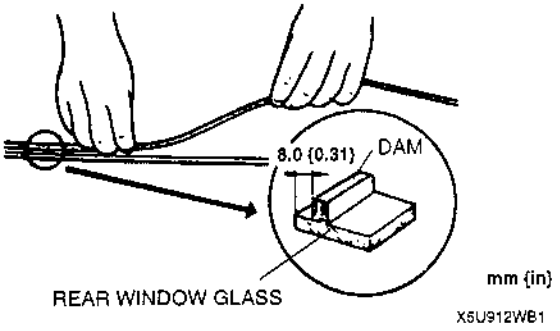

X5U912W14

Caution
- **Keep the area free of dirt and grease, and do not touch the surface or the primer may not properly bond to the surface of the glass and body which may cause leaks to occur.**

4. Use a brush to apply primer to the bonding area of the glass, the body and the molding within the region shown. Use only glass primer on the glass, and body primer on the body and the molding. Allow it to dry for **approximately 30 minutes**.

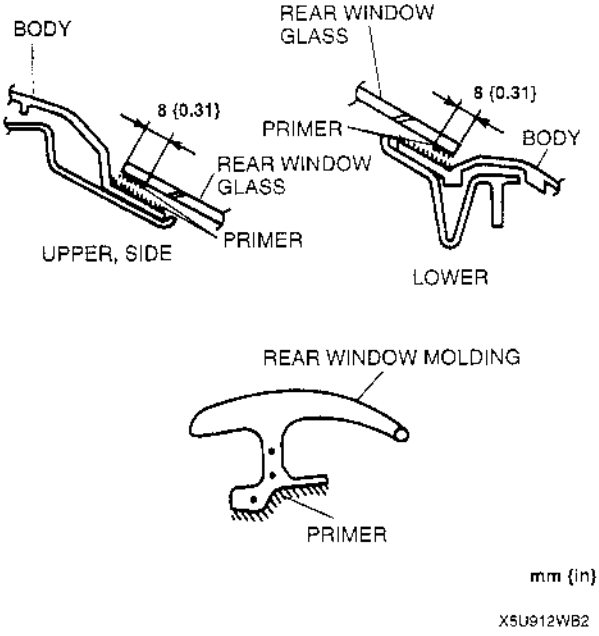

5. Once the primer is dry, apply sealant around the entire circumference to fill the gap between the dam and the edge of the glass with a **11.0—13.0 mm {0.44—0.51 in}** high and **5.0 mm {0.20 in}** wide bead of sealant.

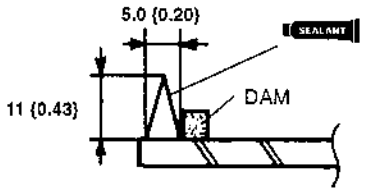

mm {in}

X5U912WB4

6. Align the bolts and install the glass onto the body.
7. Press firmly on the glass to compress the sealant.
8. Install the nuts onto the bolts.

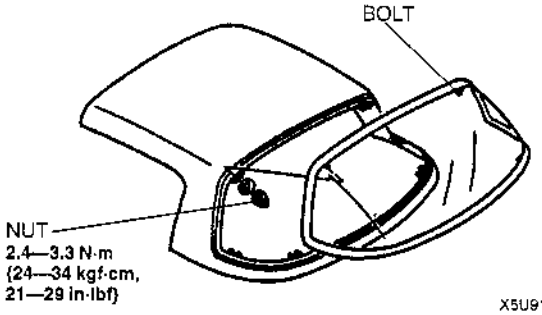

X5U912WB5

9. Use a scraper to smooth away any sealant that oozes out. Add more sealant to any points of poor contact. Adjust the sealant as shown if necessary.

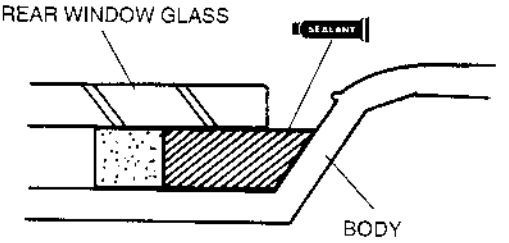

X5U912WB6

10. Before the surface of the sealant has hardened, install the rear window molding. (Refer to 09–16 REAR WINDOW MOLDING INSTALLATION.)

Hardening time of sealant

Temperature	Surface hardening time	Time required until car can be put into service
5 °C {41 °F}	Approx. 1.5 h	Approx. 12 h
20 °C {68 °F}	Approx. 1 h	Approx. 4 h
35 °C {95 °F}	Approx. 10 min	Approx. 2 h

11. Use white gasoline to remove any excess sealant.

WINDSHIELD REMOVAL

1. Remove the rearview mirror. (Refer to 09–12 REARVIEW MIRROR REMOVAL.)
2. Remove the base. (Refer to 09–12 BASE REMOVAL.)
3. Remove the A-pillar trim. (Refer to 09–17 A-PILLAR TRIM REMOVAL/INSTALLATION.)

Note
- The windshield molding is a replacement part.

4. Remove the windshield molding. (Refer to 09–17 WINDSHIELD MOLDING REMOVAL.)
5. Remove the cowl grille. (Refer to 09–16 COWL GRILLE REMOVAL/INSTALLATION.)
6. Remove the sunvisor.
7. Remove the striker. (Refer to 09–16 CONVERTIBLE TOP DISASSEMBLY/ASSEMBLY.) (Refer to 09–16 DETACHABLE HARDTOP DISASSEMBLY/ASSEMBLY.)
8. Remove the front header trim. (Refer to 09–17 FRONT HEADER TRIM REMOVAL/INSTALLATION.)
9. Apply protective tape along the edge of the body to protect it from damage.
10. Apply protective tape to the dashboard to protect it from damage.

X5U912W15

Not Reusing Windshield

Note
- For the areas of the sealant that are difficult to cut, use the **SST** (piano wire) and follow the procedures under "Reusing Windshield".

1. Use a tool like that shown in the figure, and insert the blade into the sealant.
2. Pull through the sealant around the edge of the glass.

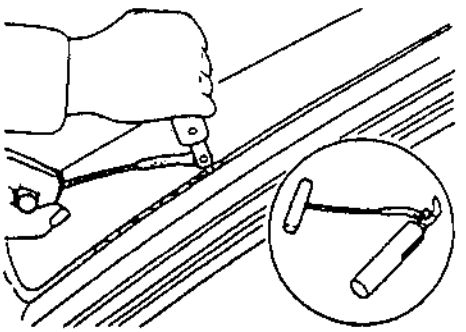

X5U912WB7

3. Remove the windshield.
4. Remove the protector.
5. Remove the spacers.

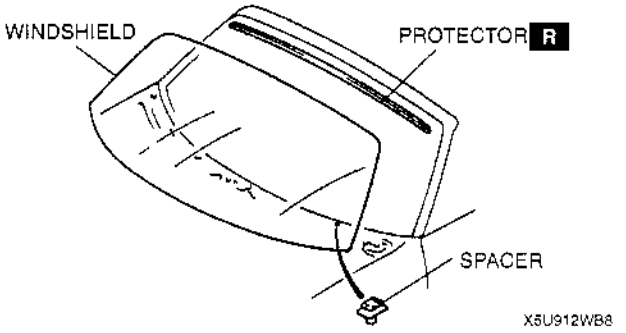

Reusing Windshield

1. Make a hole through the sealant from the inside of the vehicle by using an awl.

   Warning
   - **Using piano wire with bare hands can cause injury. Always wear gloves when using piano wire.**

2. Pass the **SST** (piano wire) through the hole.

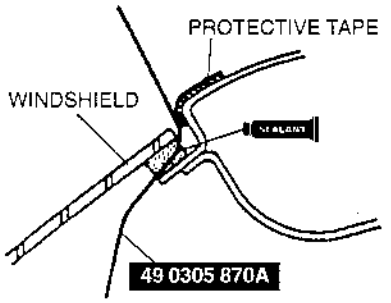

3. Wind each end of the **SST** (piano wire) around a bar.

   Note
   - Use the entire length of piano wire to prevent it from breaking when cutting through the sealant.

4. Working with another person, saw through the sealant around the edge of the glass.

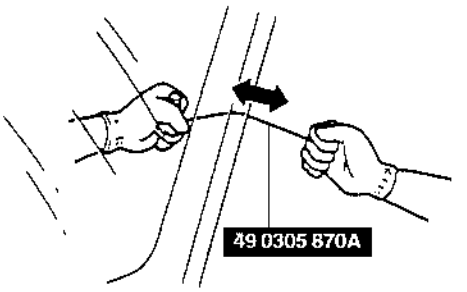

5. Remove the windshield.
6. Remove the dam from the windshield.
7. Remove the protector.
8. Remove the spacers.

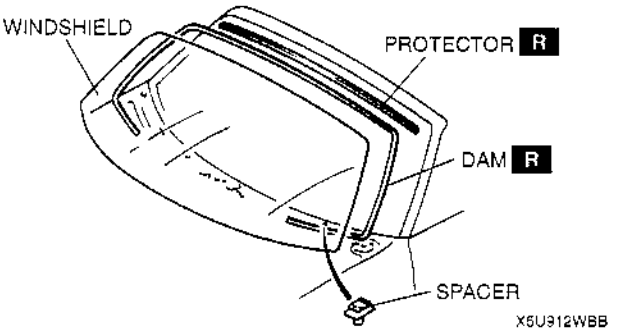

WINDSHIELD INSTALLATION

X5U912W16

Warning
- **Using a razor knife with bare hands can cause injury. Always wear gloves when using a razor knife.**

Caution
- **To prevent the sealant from cracking or the glass from being pushed out by air pressure if a door is closed, open all of the windows and leave them open until the sealant has hardened.**

1. Cut away the old sealant by using a razor knife so that **1—2 mm {0.04—0.07 in}** thickness of sealant remains around the circumference of the frame. If all the sealant has come off in any one place, apply some primer after degreasing, and allow it **30 minutes** to dry. Then put on new sealant to create **2 mm {0.08 in}** layer.
2. Clean and degrease an **approximately 50.0 mm {1.97 in}** wide strip around the circumference of the glass and the bonding area on the body.
3. Securely bond a dam along the circumference of the glass **7.0 mm {0.28 in}** from the edge.

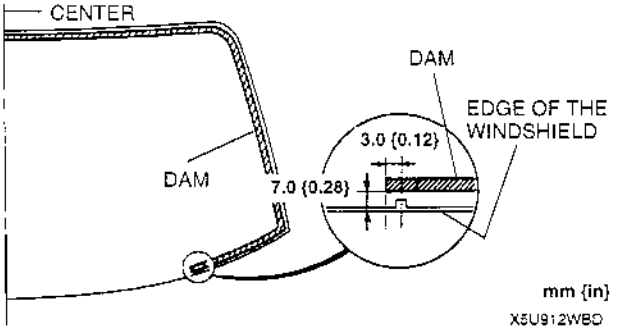

4. Install spacers into the hole.
5. Temporarily install the glass onto the body and adjust the glass-to-body clearance.

6. Make a mark on the glass directly above the V-notch of spacers.

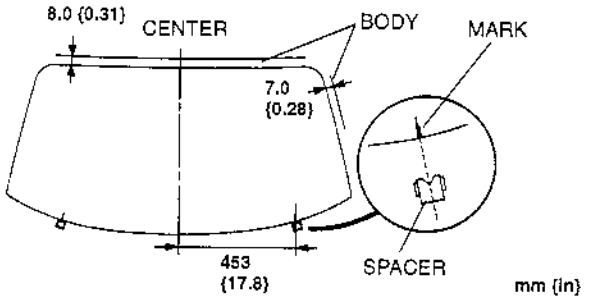

X5U912WBE

7. Remove the windshield.

Caution

- **Keep the area free of dirt and grease, and do not touch the surface or the primer may not properly bond to the surface of the glass and body which may cause leaks to occur.**

8. Use a brush to apply primer to the bonding area of the glass, the body and the molding within the region shown. Use only glass primer on the glass, and body primer on the body and the molding. Allow it to dry for **approximately 30 minutes**.

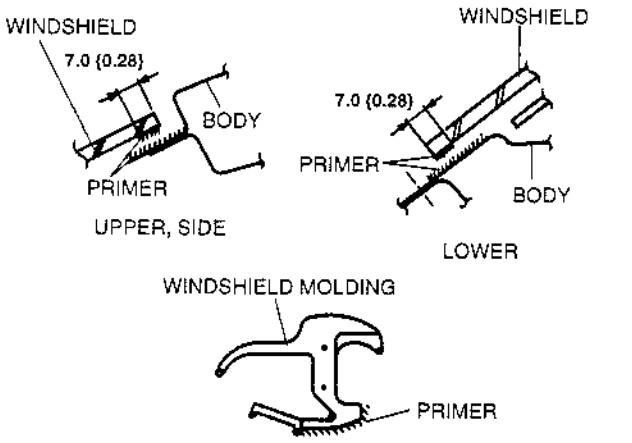

X5U912WBF

9. Align the edge of the protector to the spot mark.
10. Securely bond the protector to the body as indicated in the figure.

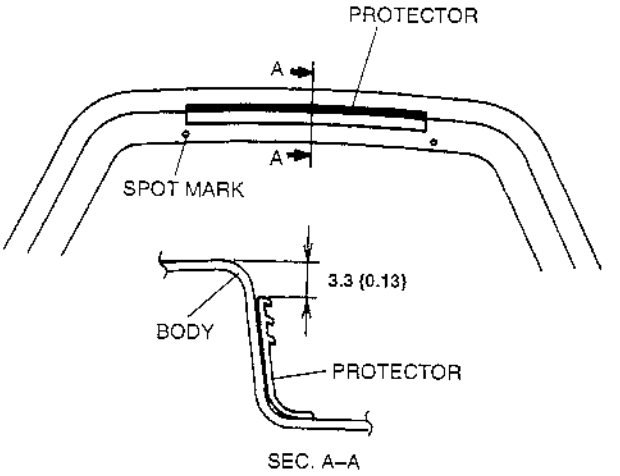

X5U912WBG

11. Once the primer is dry, apply sealant around the entire circumference to fill the gap between the dam and the edge of the glass measuring **11.0 mm {0.43 in}** high and **5.0 mm {0.20 in}** wide.

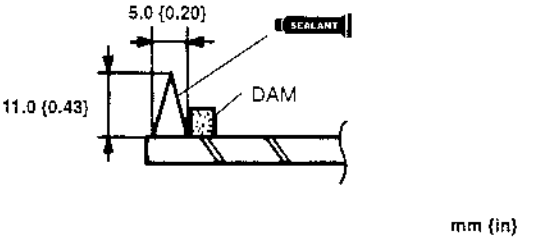

X5U912WBH

12. Align the glass marks with the V-notches in spacers and install the glass onto the body.
13. Press firmly inward on the glass to compress the sealant.
14. Verify that the gap along the upper edge is **8.0 mm {0.31 in}** and side edge is **7.0 mm {0.28 in}**.

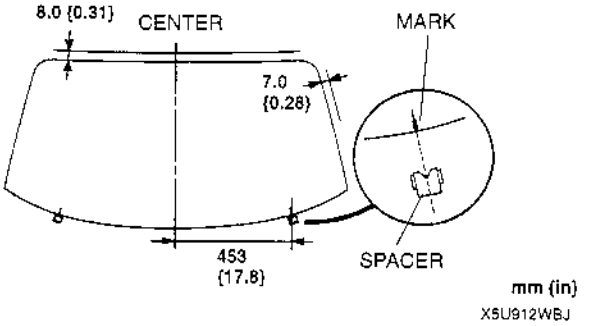

X5U912WBJ

15. Use a scraper to smooth away any sealant that oozes out. Add more sealant to any points of poor contact. Adjust the sealant as shown if necessary.

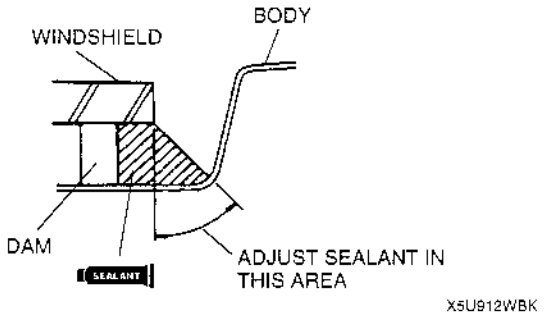

16. Before the surface of the sealant has hardened, install the windshield molding. (Refer to 09–16 WINDSHIELD MOLDING INSTALLATION.)

Hardening time of sealant

Temperature	Surface hardening time	Time required until car can be put into service
5 °C {41 °F}	Approx. 1.5 h	Approx. 12 h
20 °C {68 °F}	Approx. 1 h	Approx. 4 h
35 °C {95 °F}	Approx. 10 min	Approx. 2 h

17. Use white gasoline to remove any excess sealant.
18. Install the front header trim. (Refer to 09–17 FRONT HEADER TRIM REMOVAL/INSTALLATION.)
19. Install the striker. (Refer to 09–16 CONVERTIBLE TOP DISASSEMBLY/ASSEMBLY.) (Refer to 09–16 DETACHABLE HARDTOP DISASSEMBLY/ASSEMBLY.)
20. Install the cowl grille. (Refer to 09–17 COWL GRILLE REMOVAL/INSTALLATION.)
21. Install the A-pillar trim. (Refer to 09–17 A-PILLAR TRIM REMOVAL/INSTALLATION.)
22. Install the base. (Refer to 09–12 BASE INSTALLATION.)
23. Install the rearview mirror. (Refer to 09–12 REARVIEW MIRROR INSTALLATION.)

FILAMENT INSPECTION

1. Turn the ignition switch to ON.
2. Turn the rear window defroster switch on.

Caution

- **Directly touching the rear window defroster filament with the lead of the circuit tester will damage it. Wrap aluminum foil around the end of the lead and test the filament by touching it with the foil.**

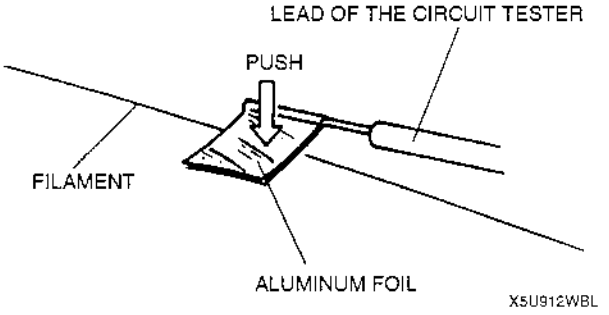

3. Connect the positive (+) lead of the voltmeter to the positive side of each filament and the negative (–) lead to ground.

X5U912W17

4. Gradually, slide the positive (+) lead from the positive side to the negative side and measure the voltage. Verify that the voltage decrease accordingly.

Measurement place	Voltage (Reference value)
(1) → (2)	Approx. 12 V → Approx. 0 V

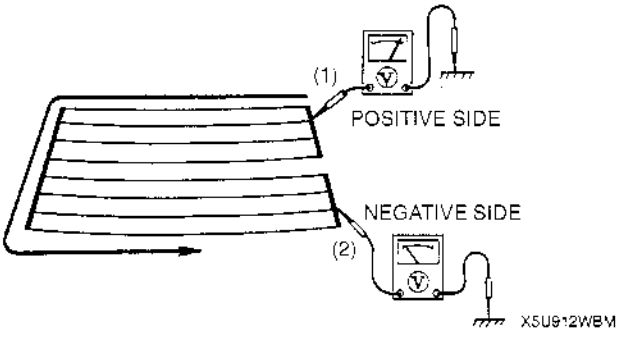

5. If the voltage is not as specified or it changes rapidly, the filament is faulty. Repair the filament.

FILAMENT REPAIR

X5U912W18

1. Use white gasoline to clean around the damaged section of the filament.
2. Attach tape above and below the damaged section of the filament.

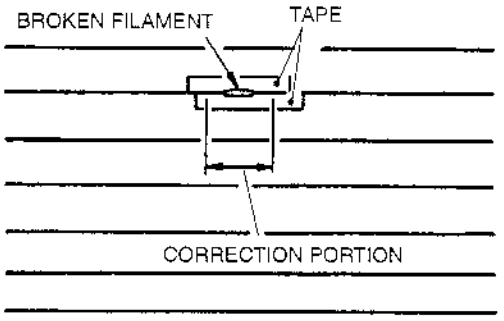

X5U912WBN

3. Using a small brush or marking pen, repair the filament with silver paint or equivalent.
4. After **approximately 2—3 minutes**, carefully remove the tape without disturbing the repaired area.

Caution

- **Do not use the rear window defroster until the paint is completely dry. It may cause other malfunctions if it is used before the paint is dry.**

5. Use a hot air blower heated to **150 °C {302 °F}** for **30 minutes** or let the paint set for **24 hours** at **25 °C {77 °F}** to allow it to dry completely.

REAR WINDOW DEFROSTER SWITCH REMOVAL/INSTALLATION

X5U912W21

Note

- Rear window defroster switch is together with the fan and rear window defroster switch.

(Refer to 07–40 HEATER CONTROL UNIT DISASSEMBLY/ASSEMBLY.)

REAR WINDOW DEFROSTER SWITCH INSPECTION

X5U912W22

1. Remove the heater control unit. (Refer to 07–40 HEATER CONTROL UNIT REMOVAL.)
2. Inspect for continuity between the rear window defroster switch terminals by using an ohmmeter.

○—▶|—○ : Diode

Switch position	Terminal	
	3B	3D
Off		
On	○—▶|—○	

X5U912WBS

3. Connect battery positive voltage to terminal 3A and ground to the terminal 3D.
4. Turn the rear window defroster switch on.
5. Verify that the LED illuminates.
6. If not as specified, replace the fan and rear window defroster switch.

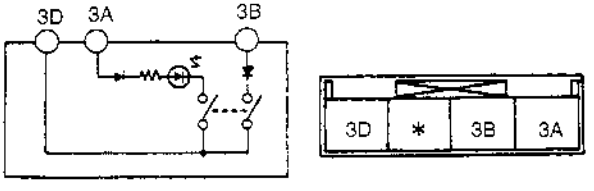

X5U912WBT

REAR WINDOW DEFROSTER POWER-CUT SWITCH REMOVAL/INSTALLATION

X5U912W35

1. Remove the convertible top. (Refer to 09–16 CONVERTIBLE TOP REMOVAL/INSTALLATION.)
2. Remove the screw to remove the rear window defroster power-cut switch.
3. Install in the reverse order of removal.

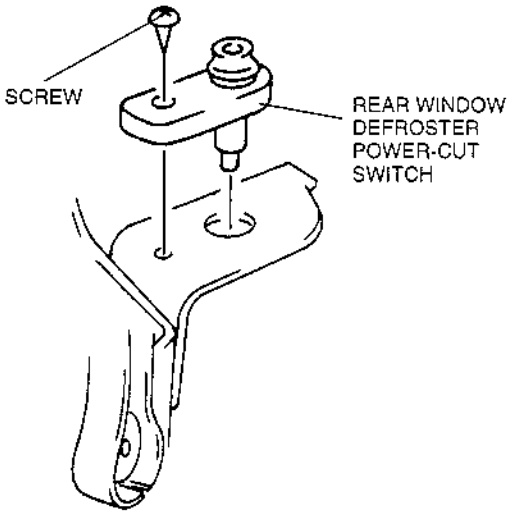

X5U912WC9

REAR WINDOW DEFROSTER POWER-CUT SWITCH INSPECTION

X5U912W36

1. Remove the rear window defroster power-cut switch. (Refer to 09–12 REAR WINDOW DEFROSTER POWER-CUT SWITCH REMOVAL/INSTALLATION.)
2. Inspect for continuity between the rear window defroster power-cut switch terminal and a body ground by using an ohmmeter.

○—○ : Continuity

Switch position	Terminal	
	A	Body GND
Pressed		
Released	○	○

X5U912WCB

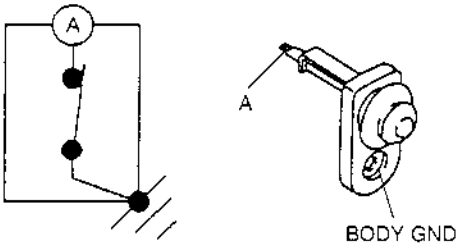

X5U912WCA

3. If not as specified, replace the door switch.

REAR WINDOW DEFROSTER RELAY REMOVAL/INSTALLATION

1. Disconnect the negative battery cable.
2. Remove the lower panel.
3. Remove in the order indicated in the table.
4. Install in the reverse order of removal.

X5U912W19

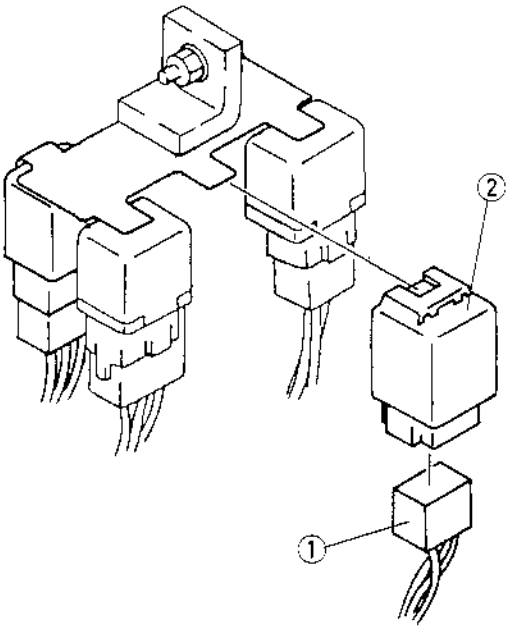

X5U912WBP

1	Connector
2	Rear window defroster relay

REAR WINDOW DEFROSTER RELAY INSPECTION

1. Remove the rear window defroster relay. (Refer to 09–12 REAR WINDOW DEFROSTER RELAY REMOVAL/INSTALLATION.)
2. Inspect for continuity between the rear window defroster relay terminals by using an ohmmeter.

○—○ : Continuity

Step	Terminal			
	A	C	B	D
1	○	○		
2	B+	GND	○	○

X5U912WBQ

X5U912W20

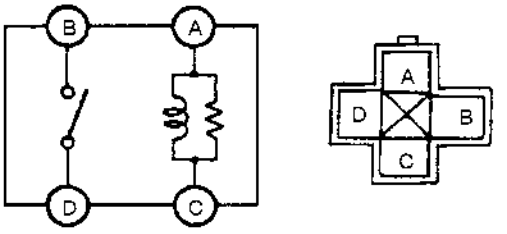

X5U912WBR

3. If not as specified, replace the rear window defroster relay.

POWER OUTSIDE MIRROR INSPECTION

1. Remove the door speaker. (Refer to 09–20 DOOR SPEAKER REMOVAL/INSTALLATION.)
2. Disconnect the power outside mirror connector. (Refer to 09–12 POWER OUTSIDE MIRROR REMOVAL/INSTALLATION.)
3. Apply battery positive voltage to the power outside mirror terminals and inspect the operation of the power outside mirror.

X5U912W23

Terminal		Mirror operation
B+	GND	
B	D	Up
D	B	Down
D	F	Left
F	D	Right

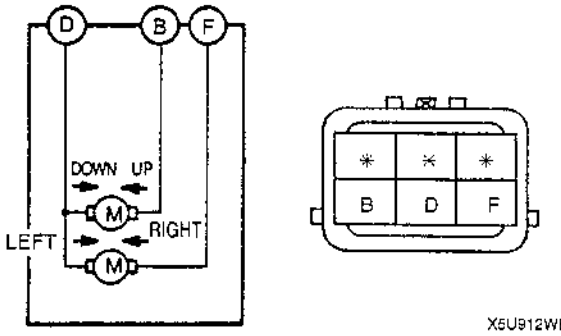

X5U912WBU

4. If not as specified, replace the power outside mirror.

POWER OUTSIDE MIRROR REMOVAL/INSTALLATION

X5U912W24

1. Disconnect the negative battery cable.
2. Remove the door speaker. (Refer to 09–20 DOOR SPEAKER REMOVAL/INSTALLATION.)
3. Disconnect the power outside mirror connector.
4. Turn the power outside mirror forward.
5. Remove the screws.
6. Remove the power outside mirror.
7. Install in the reverse order of removal.

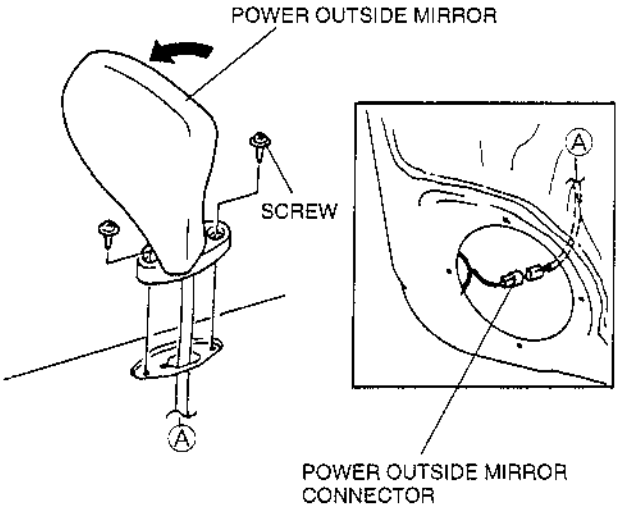

X5U912WBV

MANUAL OUTSIDE MIRROR REMOVAL/INSTALLATION

X5U912W25

1. Turn the manual outside mirror forward.
2. Remove the screws.
3. Remove the manual outside mirror.
4. Install in the reverse order of removal.

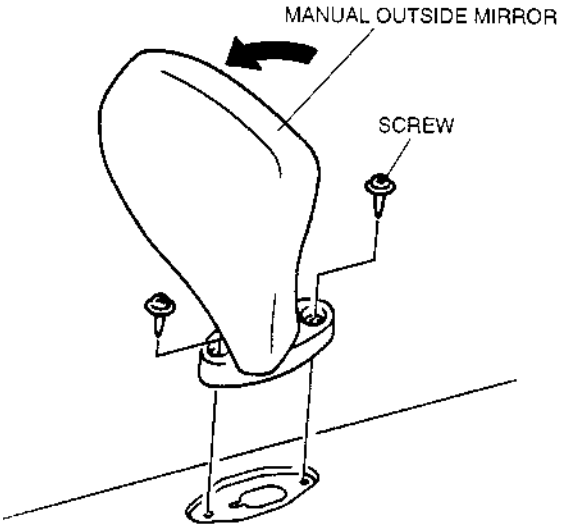

X5U912WBW

OUTSIDE MIRROR GLASS REMOVAL

X5U912W27

1. Put on gloves and safety glasses.
2. Push the top of the mirror glass (1).
3. Pull the bottom of the mirror glass to disengage clips and remove the mirror glass holder with the mirror glass from the frame (2).

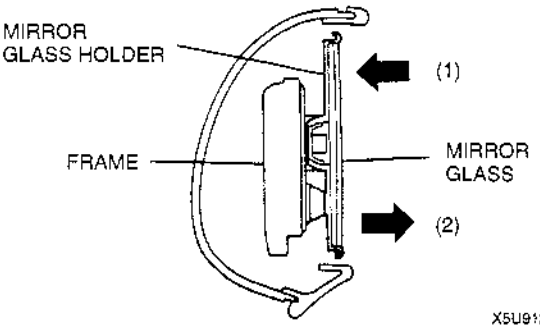

X5U912WBX

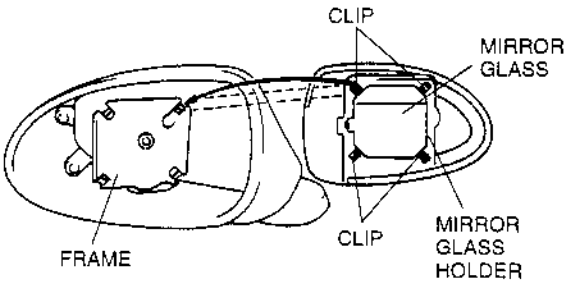

X5U912WC8

OUTSIDE MIRROR GLASS INSTALLATION

X5U912W28

1. Put on gloves and safety glasses.
2. Insert the bottom of the mirror glass holder with the mirror glass into the frame to install the lower clips (1).
3. Press the top of the mirror glass holder with the mirror glass onto the frame to install the upper clips (2).

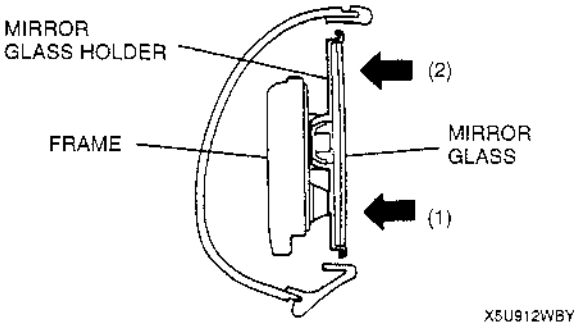

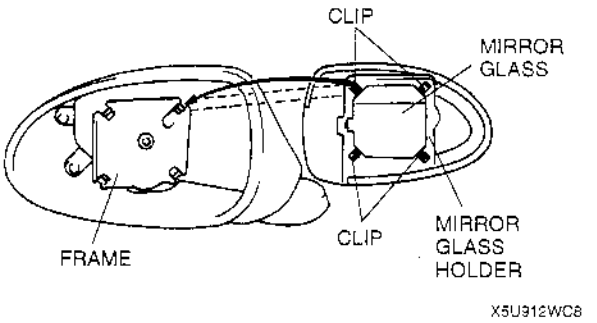

POWER OUTSIDE MIRROR SWITCH REMOVAL/INSTALLATION

X5U912W26

1. Disconnect the negative battery cable.
2. Remove the lower panel.
3. Grasp the left and right sides of the power outside mirror switch and push it out to remove it.
4. Disconnect the power outside mirror switch connector.
5. Remove the power outside mirror switch.
6. Install in the reverse order of removal.

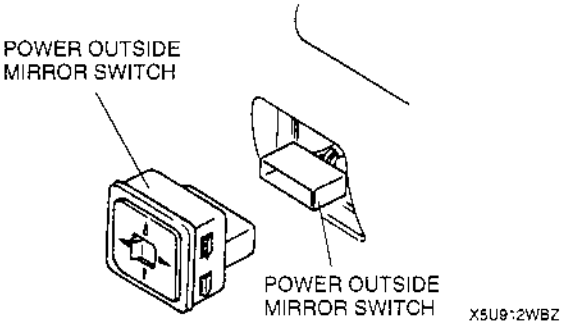

POWER OUTSIDE MIRROR SWITCH INSPECTION

X5U912W34

1. Remove the power outside mirror switch. (Refer to 09–12 POWER OUTSIDE MIRROR SWITCH REMOVAL/INSTALLATION.)
2. Inspect for continuity between the power outside mirror switch terminals by using an ohmmeter.

○—○ : Continuity

Switch position		Terminal						
		A	B	C	D	F	G	H
LH	Up	○	○			○	○	○
	Down	○	○			○	○	○
	Left	○	○			○	○	○
	Right	○	○			○	○	○
RH	Up			○	○	○	○	○
	Down			○	○	○	○	○
	Left			○	○	○	○	○
	Right			○	○	○	○	○

X5U912WC0

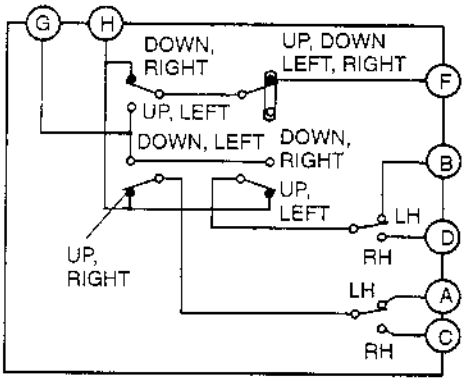

G		C	A
H	F	D	B

X5U912WC1

3. If not as specified, replace the power outside mirror switch.

REARVIEW MIRROR REMOVAL

X5U912W29

1. Insert a flathead screwdriver between the mirror and the base.
2. Push the base pin to remove the rearview mirror.

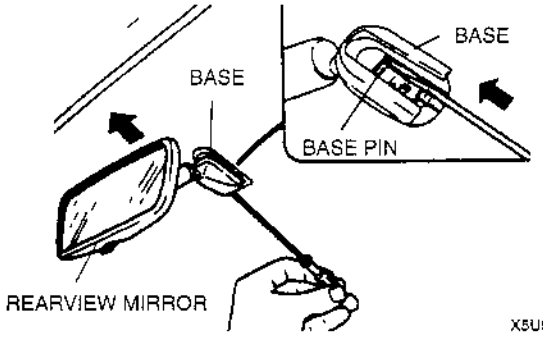

X5U912WC2

REARVIEW MIRROR INSTALLATION

X5U912W30

- Install the rearview mirror onto the base.

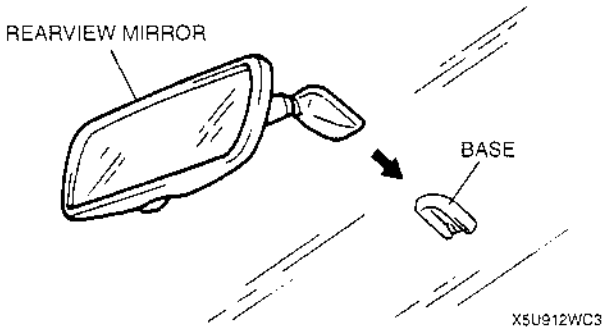

BASE REMOVAL

X5U912W31

1. Remove the rearview mirror.
2. Wind each end of the **SST** (piano wire) around a bar.

   Warning
   - **Using piano wire with bare hands can cause injury. Always wear gloves when using piano wire.**

   Note
   - Use the entire length of piano wire to prevent it from breaking when cutting through the sealant.

3. Saw through the sealant to remove the base.

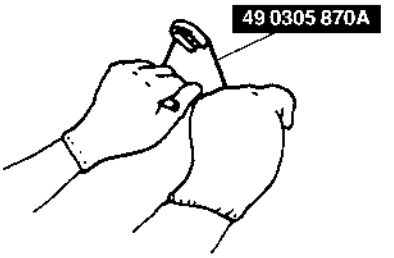

BASE INSTALLATION

X5U912W32

Warning
- **Using a razor knife with bare hands can cause injury. Always wear gloves when using a razor knife.**

1. Cut away all of the original sealant by using a razor knife.
2. Clean and degrease the ceramic coating on the glass and the base.

   Caution
   - **Keep the area free of dirt and grease, and do not touch the surface or the primer may not properly bond to the surface of the glass.**

3. Apply primer to the bonding area of the glass and the base. Use only glass primer on the glass, and body primer on the base. Allow the primer to dry for **approximately 30 minutes**.
4. Apply a height of **3.0 mm {0.12 in}** sealant to the base.

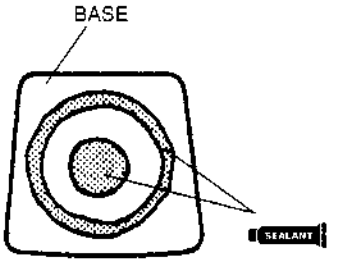

5. Center the base in the ceramic coating and press it onto the glass.

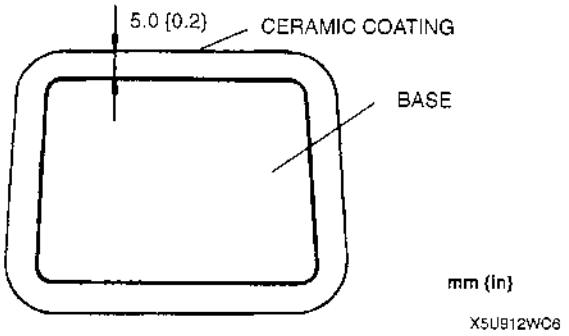

6. Use white gasoline to remove any excess sealant.

Hardening time of sealant

Temperature	Surface hardening time	Time required until car can be put into service
5 °C {41 °F}	Approx. 1.5 h	Approx. 12 h
20 °C {68 °F}	Approx. 1 h	Approx. 4 h
35 °C {95 °F}	Approx. 10 min	Approx. 2 h

7. Install the rearview mirror.

09–13 SEAT

SEAT REMOVAL/INSTALLATION

X5J913WC1

1. Remove as indicated in the table.
2. Install in the reverse order of removal.

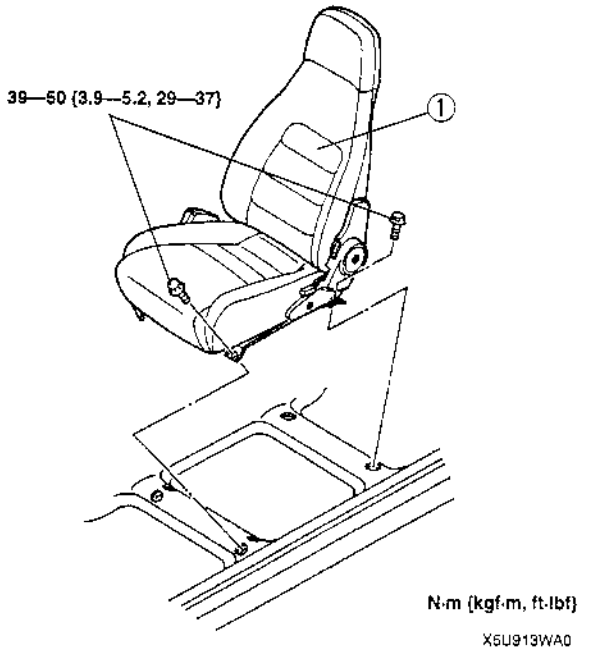

1	Seat

SEAT DISASSEMBLY/ASSEMBLY

X5U913W02

1. Disassemble in the order indicated in the table.
2. Assemble in the reverse order of disassembly.

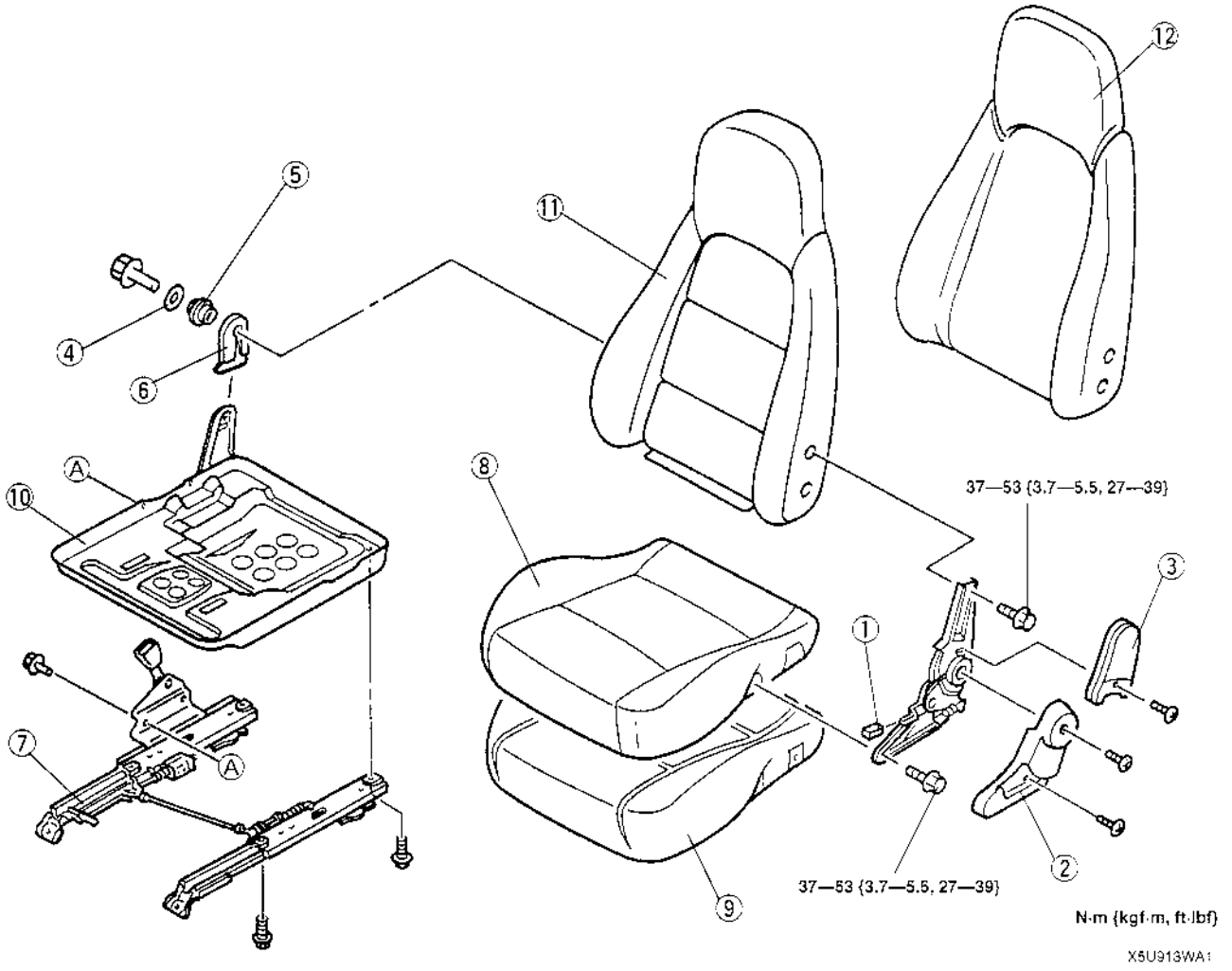

1	Recliner lever
2	Recliner knuckle cover
3	Side cover
4	Silencer
5	Bushing
6	Hinge cover

7	Slide adjuster
8	Seat cushion trim
9	Seat cushion pad
10	Seat cushion frame
11	Seat back trim
12	Seat back pad and frame

09–14 SECURITY AND LOCKS

DOOR LOCK AND OPENER REMOVAL/INSTALLATION

X5U914W01

1. Raise the door glass fully.
2. Disconnect negative battery cable.
3. Remove the door trim. (Refer to 09–17 DOOR TRIM REMOVAL/INSTALLATION.)
4. To remove the door lock, remove the rear glass guide. (Refer to 09–11 DOOR DISASSEMBLY/ASSEMBLY.)
5. Remove in the order indicated in the table.
6. Install in the reverse order of removal.

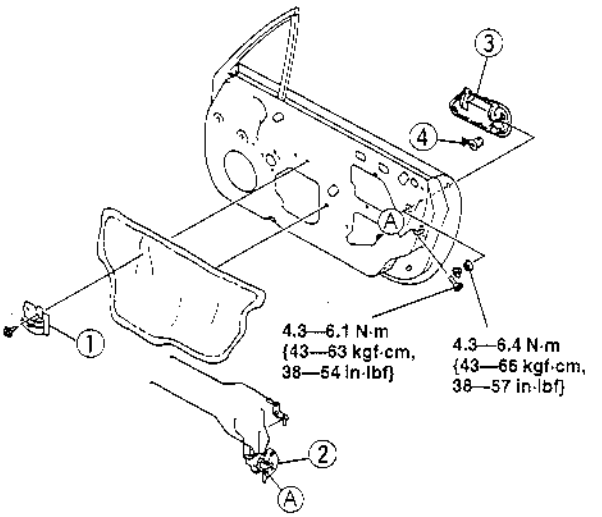

X5U914WA0

1	Inner handle
2	Door lock
3	Outer handle
4	Door key cylinder

DOOR LOCK ACTUATOR INSPECTION

X5U914W02

Note
- The door lock actuator is together with the passenger's side door lock.

1. Remove the passenger's side door trim. (Refer to 09–17 DOOR TRIM REMOVAL/INSTALLATION.)
2. Remove the door screen.
3. Disconnect the door lock actuator connector.
4. Apply battery positive voltage to the door lock actuator terminals and inspect the operation of the door lock actuator.

Connection		Actuator operation
B+	GND	
A	B	Lock
B	A	Unlock

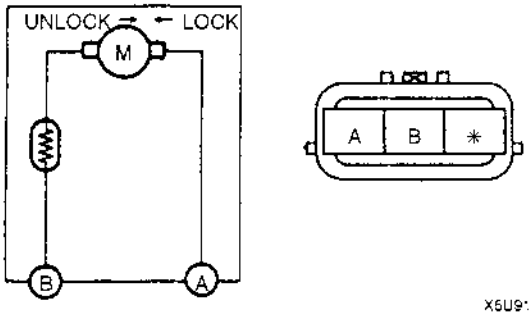

X5U914WA1

5. If not as specified, replace the passenger's side door lock.

DOOR LOCK-LINK SWITCH INSPECTION

X5U914W03

Note
- The door lock-link switch is together with the driver's side door lock.

1. Remove the driver's side door trim. (Refer to 09–17 DOOR TRIM REMOVAL/INSTALLATION.)
2. Remove the door screen.
3. Disconnect the door lock-link switch connector.
4. Inspect for continuity between the door lock-link switch terminals by using an ohmmeter.

○—○ : Continuity

Lock knob position	Terminal		
	A	C	B
Lock	○	○	
Unlock		○	○

X5U914WA2

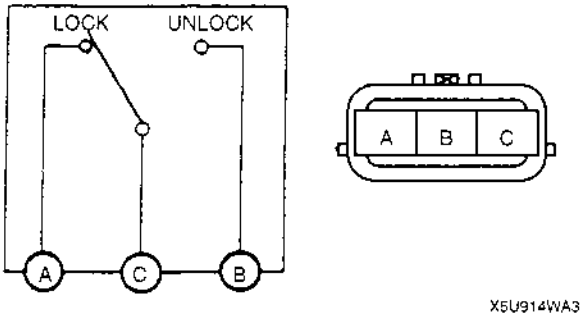

X5U914WA3

5. If not as specified, replace the driver's side door lock.

DOOR LOCK STRIKER REMOVAL/INSTALLATION

X5U914W06

1. Remove the screws.
2. Remove the door lock striker.

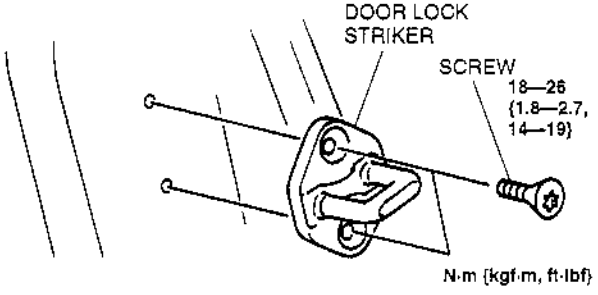

X5U914WA6

3. Install in the reverse order of removal.
4. Adjust the door. (Refer to 09–11 DOOR ADJUSTMENT.)

DOOR LOCK CONTROL MODULE INSPECTION

X5U914W04

1. Remove the lower panel.
2. Measure the voltage at the door lock control module terminals as indicated below.
3. Disconnect the door lock control module connector before inspect for continuity at terminals K, L and N.
4. If not as specified, inspect the parts listed under "Inspection area" and the related wiring harnesses.
5. If the parts and wiring harnesses are okay but the system still does not work properly, replace the door lock control module.

Terminal Voltage List (Reference)

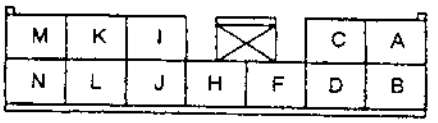

X5U914WA4

Terminal	Signal	Connection	Test condition	Voltage (V)/ Continuity	Inspection area
A	Power supply	D.LOCK 10 A fuse	Constant	B+	D.LOCK 10 A fuse
B	—	Not used	—	—	—
C	Unlock output	Door lock actuator	Door lock actuator is unlocked	0→B+→0	Door lock actuator
			Other	0	
D	Lock output	Door lock actuator	Door lock actuator is locked	0→B+→0	Door lock actuator
			Other	0	
F	—	Not used	—	—	—
H	—	Not used	—	—	—
I	—	Not used	—	—	—
J	—	Not used	—	—	—
K	Lock input	Door lock-link switch	Door lock-link switch is at lock: inspect for continuity to ground	Yes	Door lock-link switch
			Door lock-link switch is at unlock: inspect for continuity to ground	No	
L	Unlock input	Door lock-link switch	Door lock-link switch is at lock: inspect for continuity to ground	No	Door lock-link switch
			Door lock-link switch is at unlock: inspect for continuity to ground	Yes	
M	—	Not used	—	—	—
N	GND	Ground	Constant: inspect for continuity to ground	Yes	—

DOOR LOCK CONTROL MODULE REMOVAL/INSTALLATION

X5U914W05

1. Disconnect the negative battery cable.
2. Remove the lower panel.
3. Remove in the order indicated in the table.
4. Install in the reverse order of removal.

1	Connector
2	Door lock control module

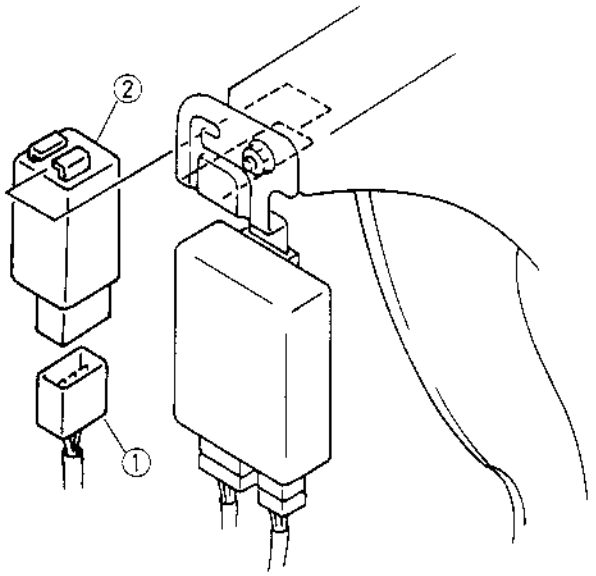

X5U914WA5

FUEL-FILLER LID OPENER REMOVAL/INSTALLATION

X5U914W07

1. Remove the rear console. (Refer to 09–17 REAR CONSOLE REMOVAL/INSTALLATION.)
2. Remove the rear package trim. (Refer to 09–17 REAR PACKAGE TRIM REMOVAL/INSTALLATION.)
3. Remove the rear end mat.
4. Remove the driver's side trunk side trim.
5. Remove in the order indicated in the table.
6. Install in the reverse order of removal.

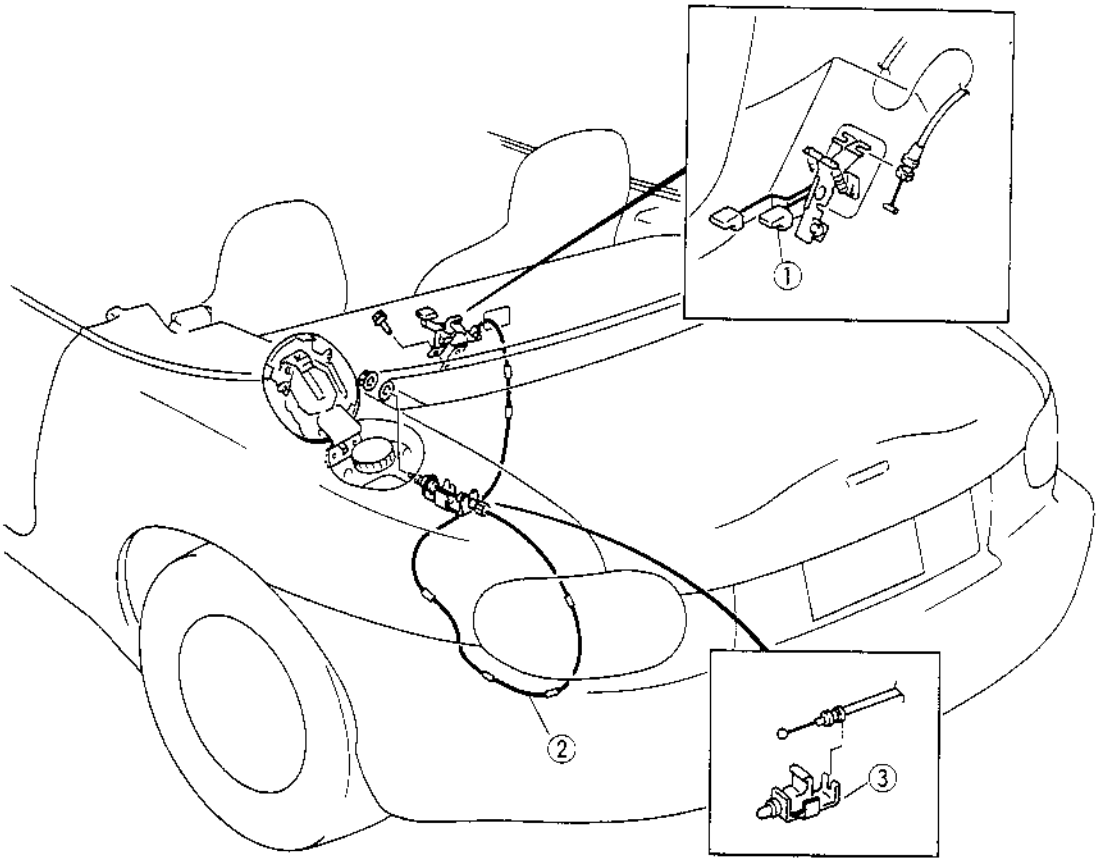

X5U914WA7

1	Fuel-filler lid opener lever
2	Fuel-filler lid opener cable
3	Fuel-filler lid opener

HOOD LOCK AND OPENER REMOVAL/INSTALLATION

X5U914W08

1. To remove the hood lock, remove the upper shroud panel.
2. Remove in the order indicated in the table.
3. Install in the reverse order of removal.
4. Adjust the hood. (Refer to 09–10 HOOD ADJUSTMENT.)

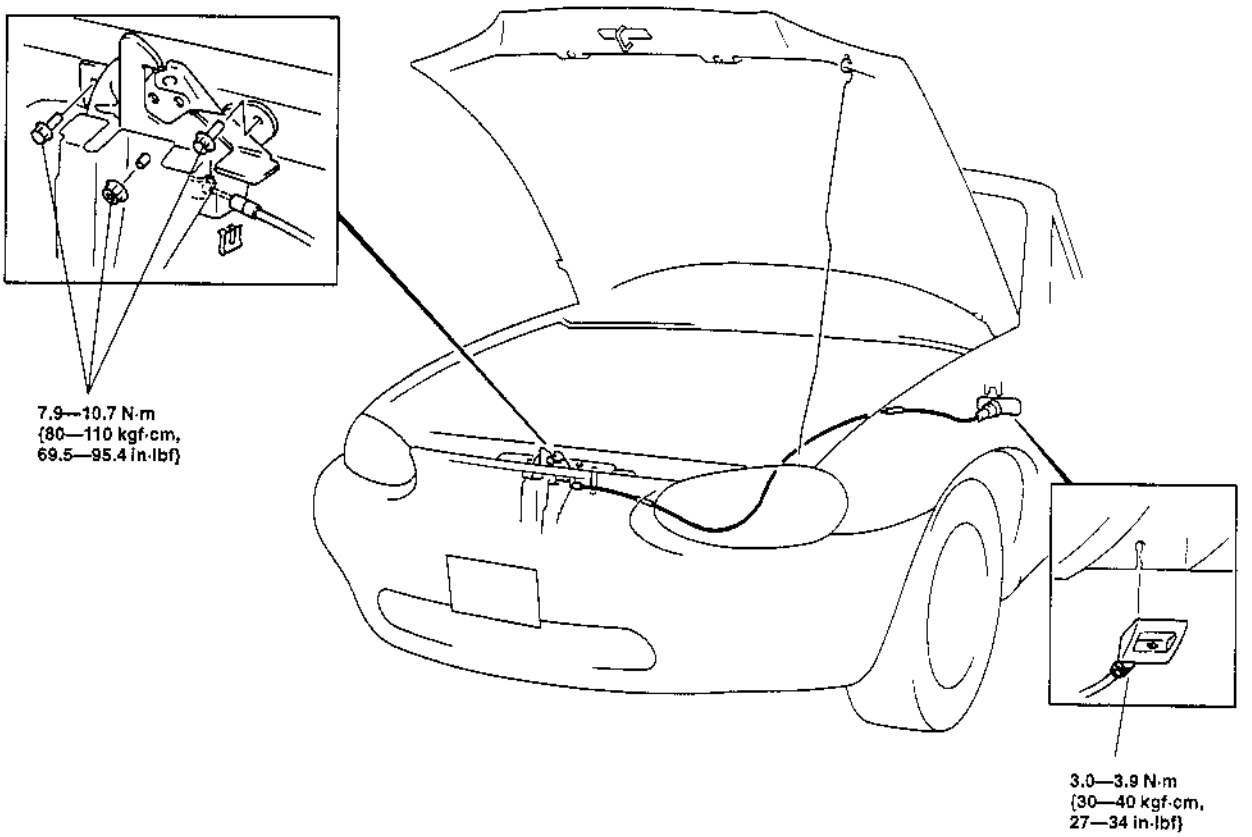

X5U914WA6

1	Hood lock		2	Hood release cable

TRUNK LID LOCK AND OPENER REMOVAL/INSTALLATION

X5U914W09

1. Disconnect the negative battery cable.
2. Remove the rear console. (Refer to 09–17 REAR CONSOLE REMOVAL/INSTALLATION.)
3. Remove the rear package trim. (Refer to 09–17 REAR PACKAGE TRIM REMOVAL/INSTALLATION.)
4. Remove the rear end mat.
5. Remove the driver's side trunk side trim.
6. Remove the trunk end trim.
7. To remove the trunk key cylinder, remove the rear bumper. (Refer to 09–10 REAR BUMPER REMOVAL/INSTALLATION.)
8. Remove in the order indicated in the table.
9. Install in the reverse order of removal.
10. Adjust the trunk lid. (Refer to 09–10 TRUNK LID ADJUSTMENT.)

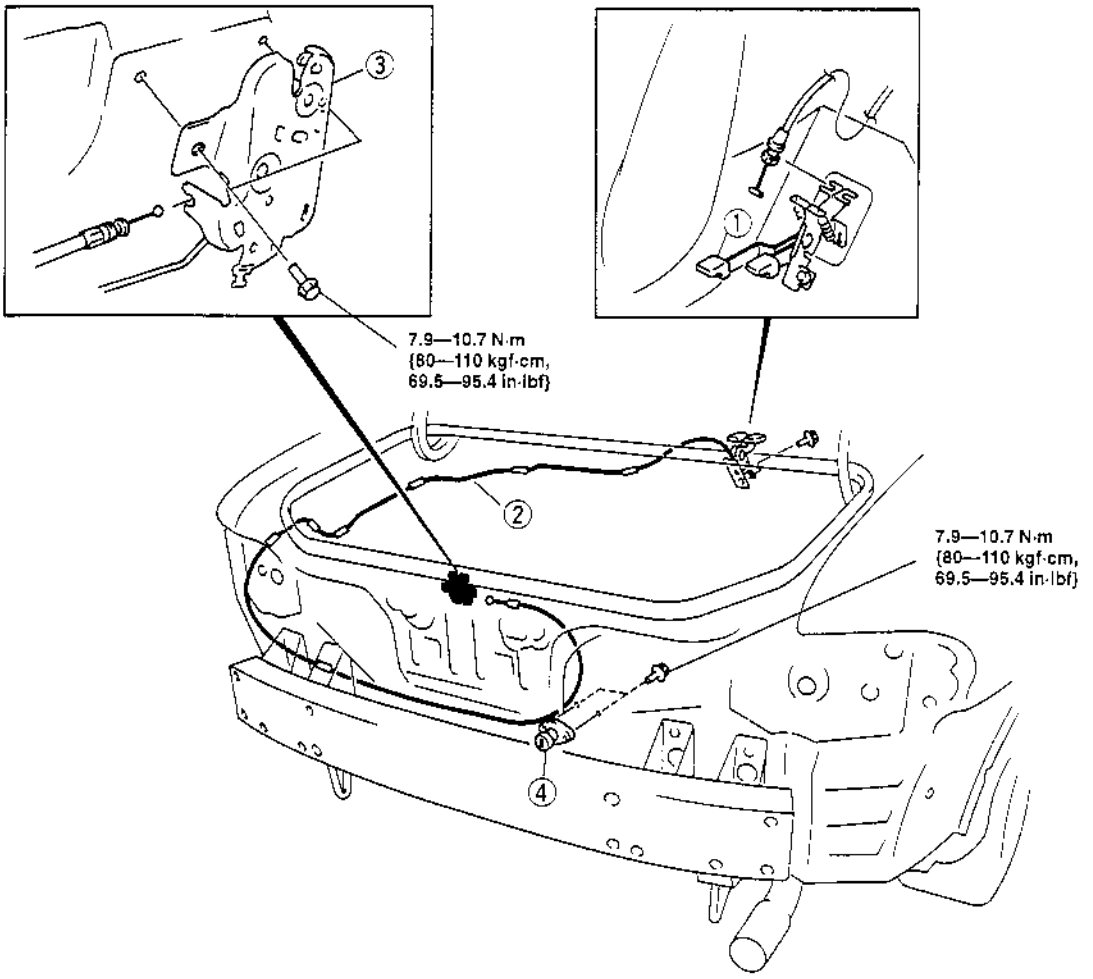

X5U914WA9

1	Trunk lid opener lever
2	Trunk lid opener cable

3	Trunk lid lock
4	Trunk key cylinder

TRUNK LID STRIKER REMOVAL/INSTALLATION

X5U914W10

1. Remove the bolts.
2. Remove the trunk lid striker.

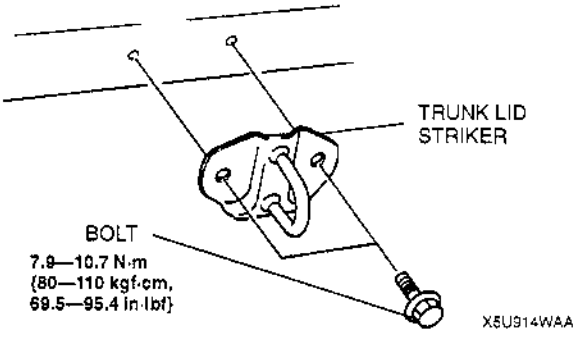

X5U914WAA

3. Install in the reverse order of removal.
4. Adjust the trunk lid. (Refer to 09–10 TRUNK LID ADJUSTMENT.)

09–16 EXTERIOR TRIM

COWL GRILLE REMOVAL/INSTALLATION

X5U916W07

1. Remove the windshield wiper arm and blade. (Refer to 09–19 WINDSHIELD WIPER ARM AND BLADE REMOVAL/INSTALLATION.)
2. Remove in the order indicated in the table.
3. Install in the reverse order of removal.

1	Cowl cap
2	Screw
3	Cowl grille

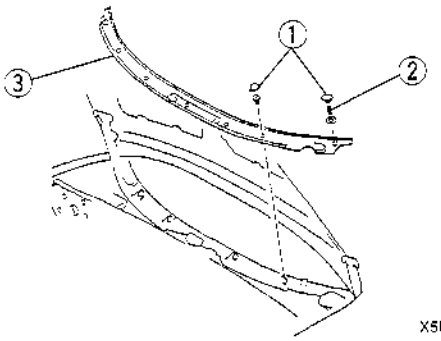

X5U916WB4

BELTLINE MOLDING REMOVAL/INSTALLATION

X5U916W06

1. Remove the rear package trim.
2. Remove the set plate.
3. Remove the bolts.
4. Remove the beltline molding.

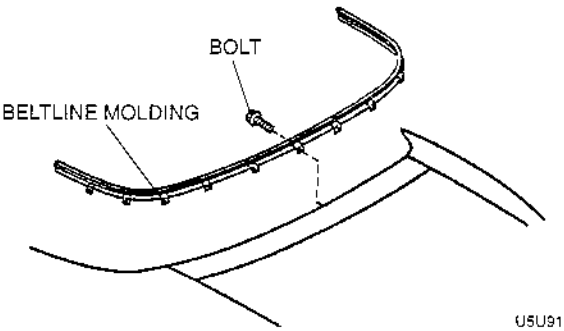

U5U91682

5. Install in the reverse order of removal.

FRONT BELTLINE MOLDING REMOVAL/INSTALLATION

X5U916W05

1. Remove the screws.
2. Pull the front beltline molding upward to disengage the clips from the body and remove it.

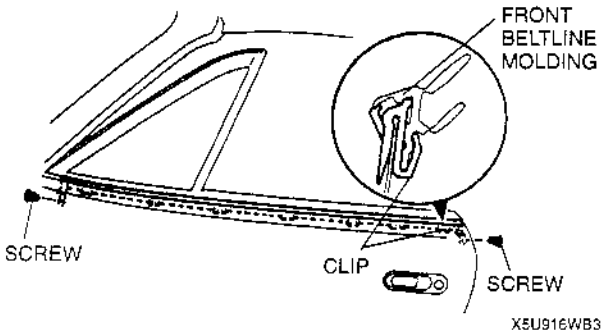

X5U916WB3

3. Install in the reverse order of removal.

REAR WINDOW MOLDING REMOVAL

X5U916W03

Detachable Hardtop

- Pull the rear window molding to remove it.

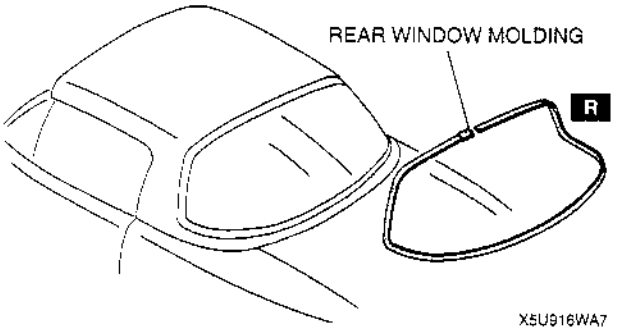

X5U916WA7

REAR WINDOW MOLDING INSTALLATION

X5U916W04

Detachable Hardtop

1. Apply protective tape along the edge of the body to protect it from damage.
2. Cut the sealant by using a razor knife as shown.

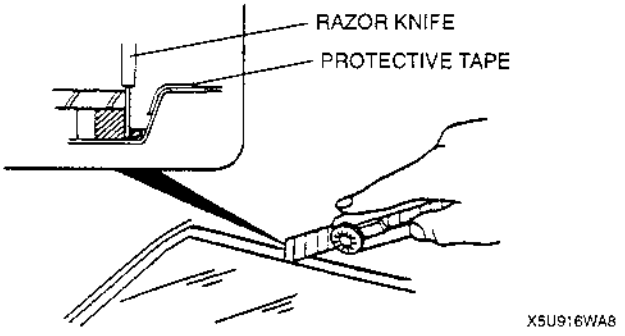

X5U916WA8

3. Insert the blade of the **SST** into the sealant, and pull on the bar to cut the sealant near the body as shown.

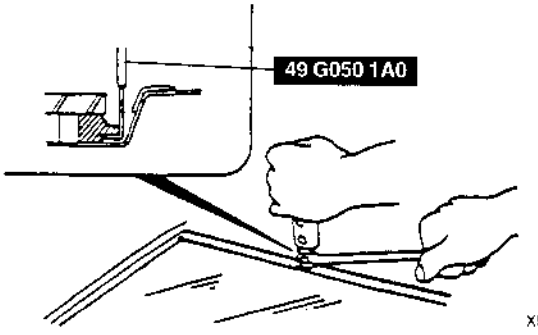

X5U916WA9

4. Insert the blade of the **SST** into the sealant, and pull on the bar to cut the sealant near the glass as shown.

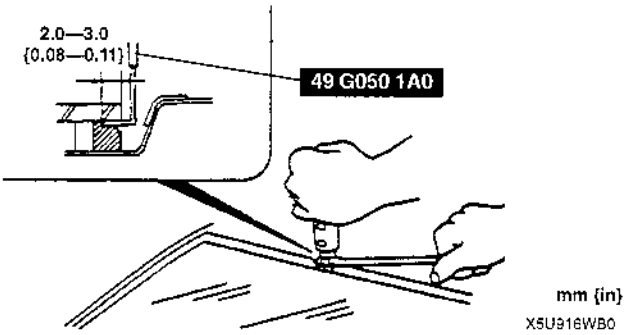

5. Remove as much sealant as possible from between the body and the glass.
6. Carefully clean around the edge of the glass and the adhesion surface of the body.

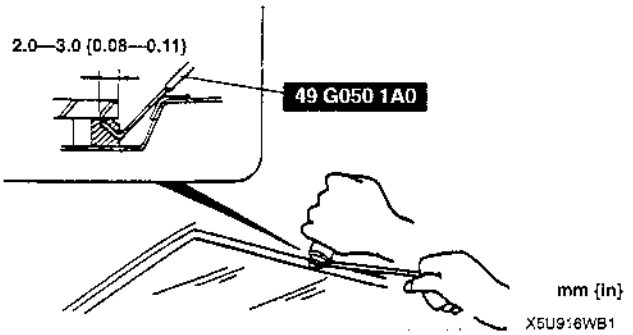

Caution

- **Keep the area free of dirt and grease, and do not touch the surface or the primer may not properly bond to the surface of the glass and body which may cause leaks to occur.**

7. Apply primer onto the bonding area of the new rear window molding by using a brush. Allow the primer to dry for **approximately 30 minutes**.

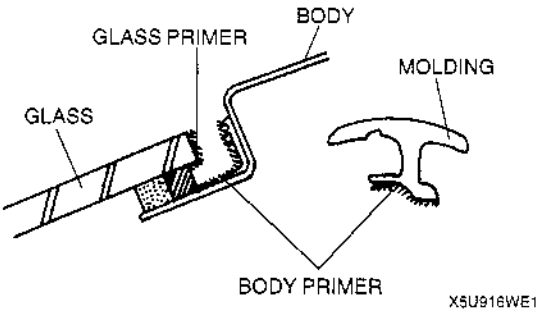

8. Apply a **3.0 mm {0.12 in}** bead of sealant between the glass and the body.
9. Reshape the sealant as shown if necessary.

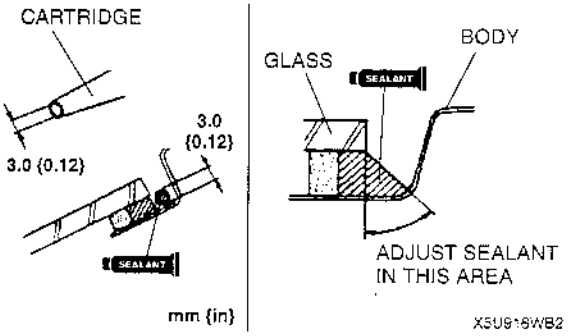

10. Install the rear window molding with the molding joint at the top.

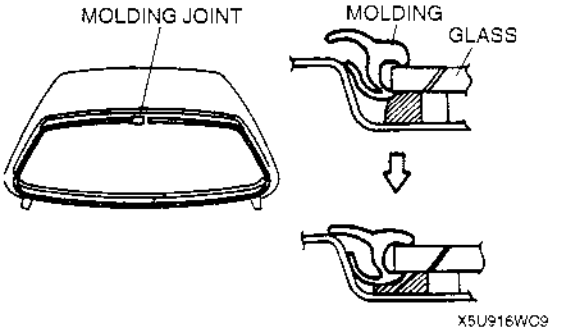

11. If the molding is too long, cut the excess molding **10 mm {0.39 in}** inside the molding joint edge.

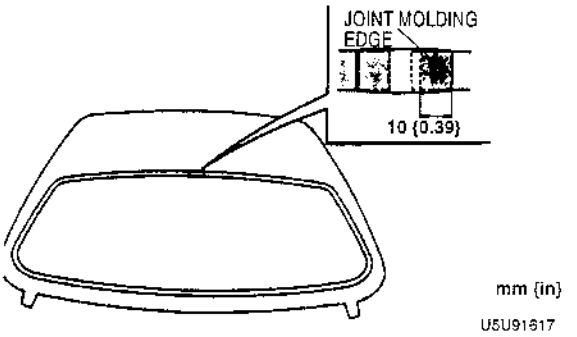

Hardening time of sealant

Temperature	Surface hardening time	Time required until car can be put into service
5 °C {41 °F}	Approx. 1.5 h	Approx. 12 h
20 °C {68 °F}	Approx. 1 h	Approx. 4 h
35 °C {95 °F}	Approx. 10 min	Approx. 2 h

12. Check for water leaks. If a leak is found, wipe the water off well and repeat the installation.

WINDSHIELD MOLDING REMOVAL

X5U916W01

- Pull the windshield molding to remove it.

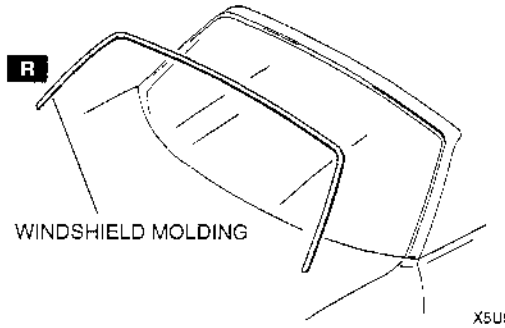

X5U916WC6

WINDSHIELD MOLDING INSTALLATION

X5U916W02

1. Apply protective tape along the edge of the body to protect it from damage.
2. Cut the sealant by using a razor knife as shown.

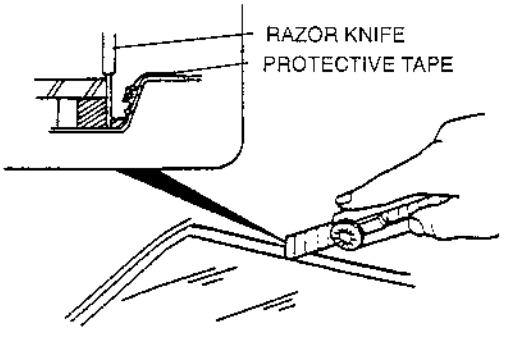

X5U916WA0

3. Insert the blade of the **SST** into the sealant, and pull on the bar to cut the sealant near the body as shown.

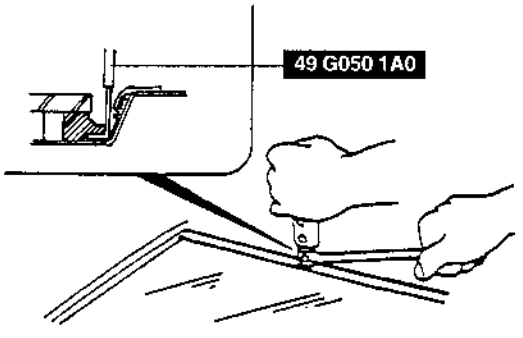

X5U916WA1

4. Insert the blade of the **SST** into the sealant, and pull on the bar to cut the sealant near the glass as shown.

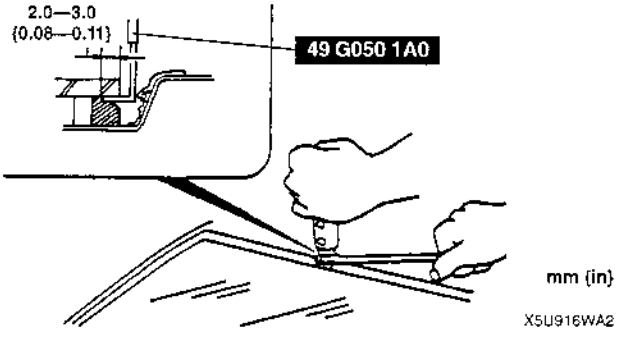

X5U916WA2

5. Remove as much sealant as possible from between the body and the glass.
6. Carefully clean around the edge of the glass and the adhesion surface of the body.

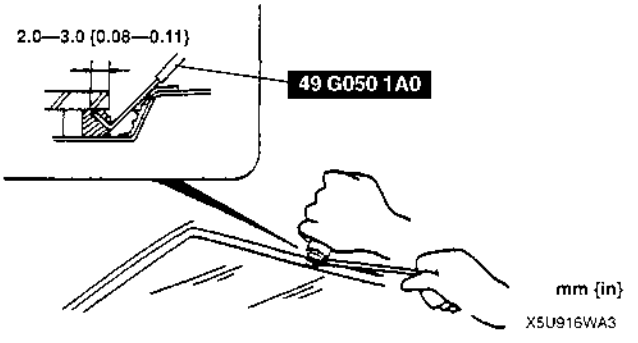

X5U916WA3

7. Align the edge of the protector to the spot mark.
8. Securely bond the protector to the body as shown.

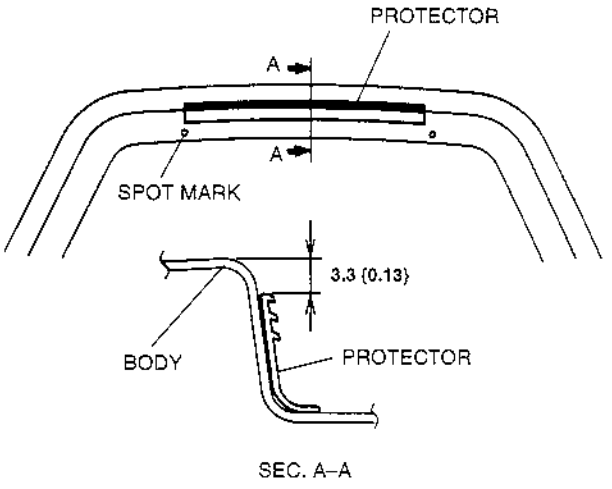

Caution

- **Keep the area free of dirt and grease, and do not touch the surface or the primer may not properly bond to the surface of the glass and body which may cause leaks to occur.**

9. Apply primer onto the bonding area of the glass, body, and new windshield molding by using a brush. Use only glass primer on the glass and body primer on the body and molding. Allow the primer to dry for **approximately 30 minutes**.

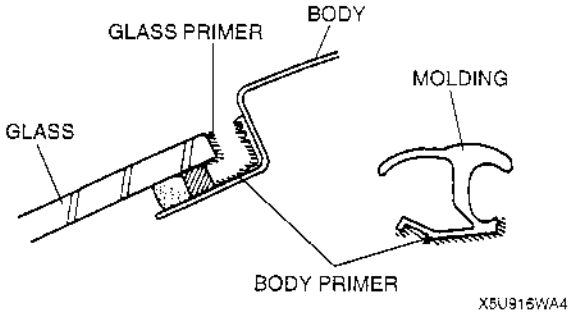

10. Apply a **3.0 mm {0.12 in}** bead of sealant between the glass and the body.
11. Reshape the sealant as shown if necessary.

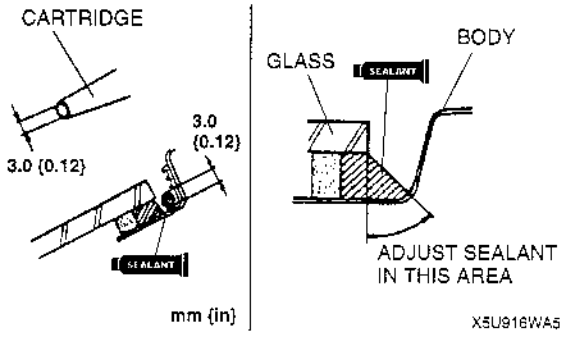

12. Install the windshield molding before the sealant has hardened.

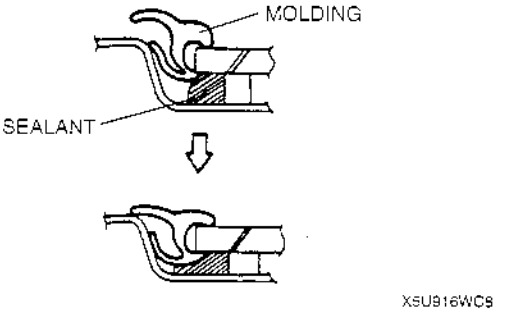

13. Align the center mark in the molding with the glass mark (A).
14. Install the upper portions of the molding into the body (B).
15. Push the corners of the molding onto the body (C).
16. Push the sides of the molding onto the body, beginning from the bottom (D).

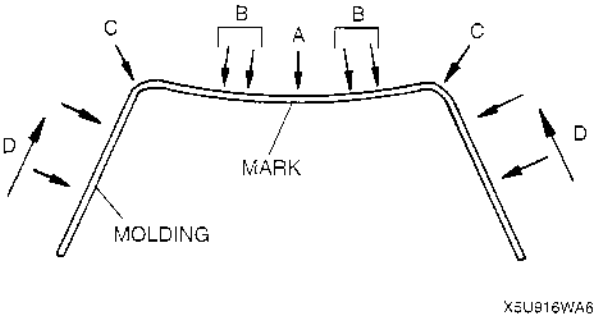

Hardening time of sealant

Temperature	Surface hardening time	Time required until car can be put into service
5 °C {41 °F}	Approx. 1.5 h	Approx. 12 h
20 °C {68 °F}	Approx. 1 h	Approx. 4 h
35 °C {95 °F}	Approx. 10 min	Approx. 2 h

17. Check for water leaks. If a leak is found, wipe the water off well and repeat the installation.

CONVERTIBLE TOP ADJUSTMENT

X5U916W11

1. Lift the protector away from the top lock adjusting nut.
2. Turn the adjusting nut clockwise to decrease clearance A and height B; turn the nut counterclockwise to increase them.

   Clearance
   A: 3—7 mm {0.12—0.27 in}
   B: –2—2 mm {–0.08—0.07 in}

3. Secure the adjusting nut with the protector.

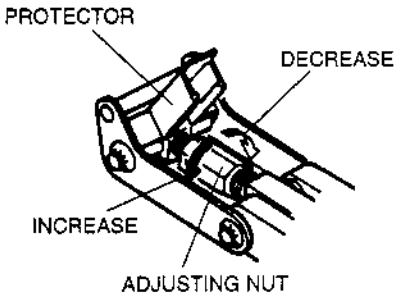

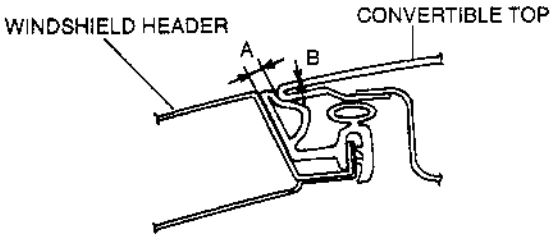

X5U916WC1

CONVERTIBLE TOP REMOVAL/INSTALLATION

X5U916WC8

1. Cover both sides of the rear window glass with thick cloth to protect the window.
2. Disconnect the negative battery cable.
3. Remove the scuff plate.
4. Remove the quarter trim.
5. Remove the rear package trim.
6. Remove in the order indicated in the table.
7. Disconnect the rear window defroster power-cut switch.
8. Install in the reverse order of removal.

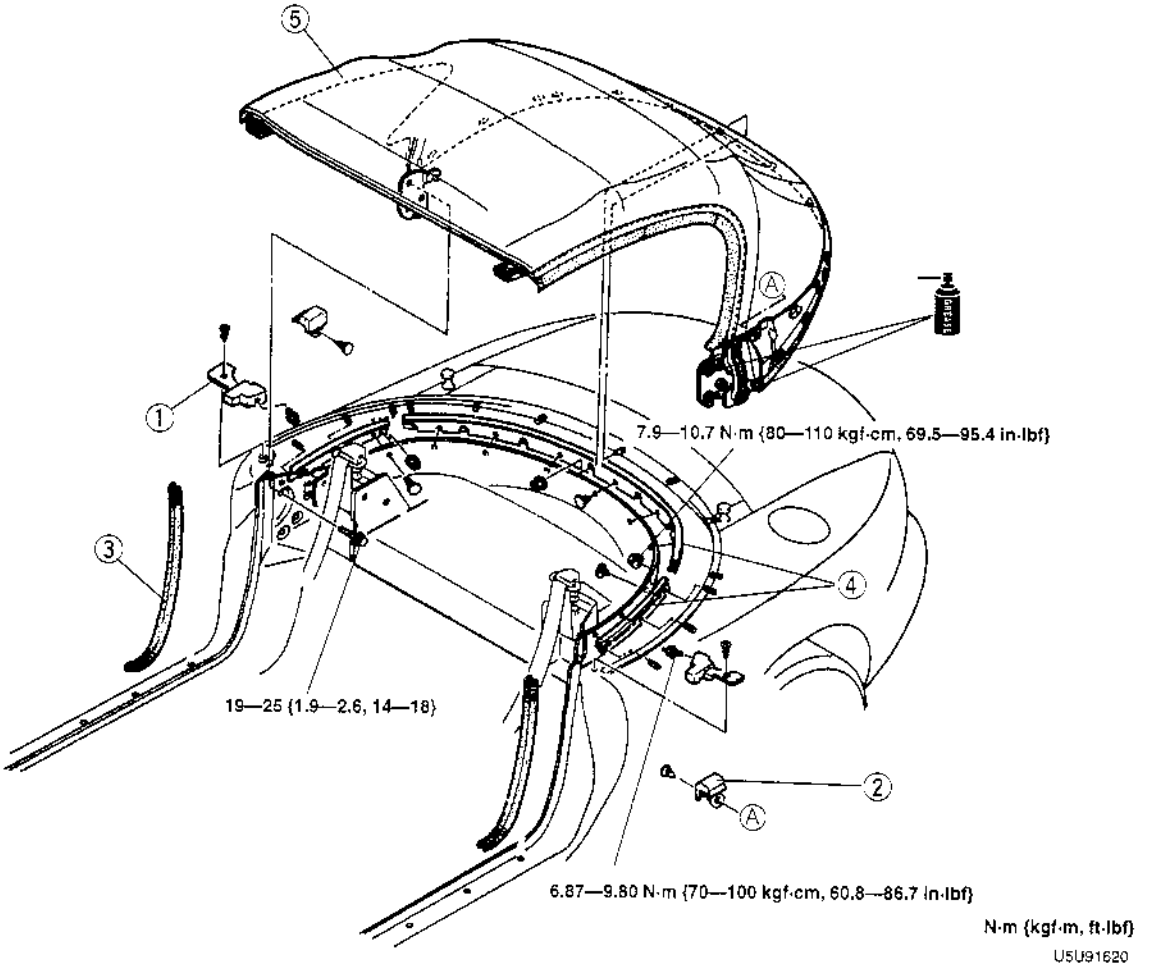

1	Beltline cover
2	Beltline protector
3	Seaming welt

4	Set plate
5	Convertible top ☞ Removal Note ☞ Installation Note

Convertible Top Removal Note

1. Unlock the top lock.
2. Lower the convertible top fully.

Convertible Top Installation Note

1. Insert the rain rail into the beltline molding lip, and install it over the studs.

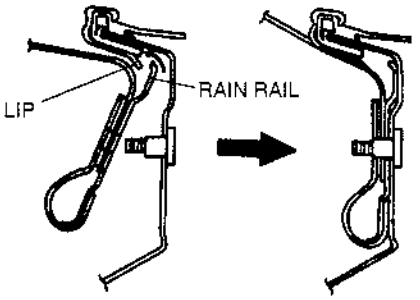

U5U91622

Tightening torque
19—25 N·m {1.9—2.6 kgf·m, 14—18 ft·lbf}

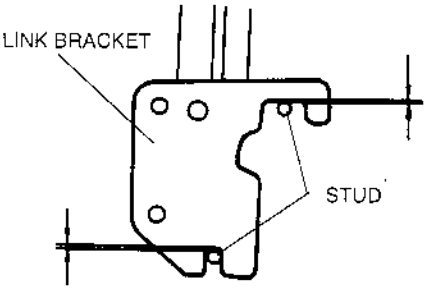

U5U91623

2. Align and install the link bracket over the studs with no clearance between the studs and the bracket.
3. Tighten the installation bolts.

CONVERTIBLE TOP DISASSEMBLY/ASSEMBLY

X5U916W09

1. Disassemble in the order indicated in the table.
2. Assemble in the reverse order of disassembly.

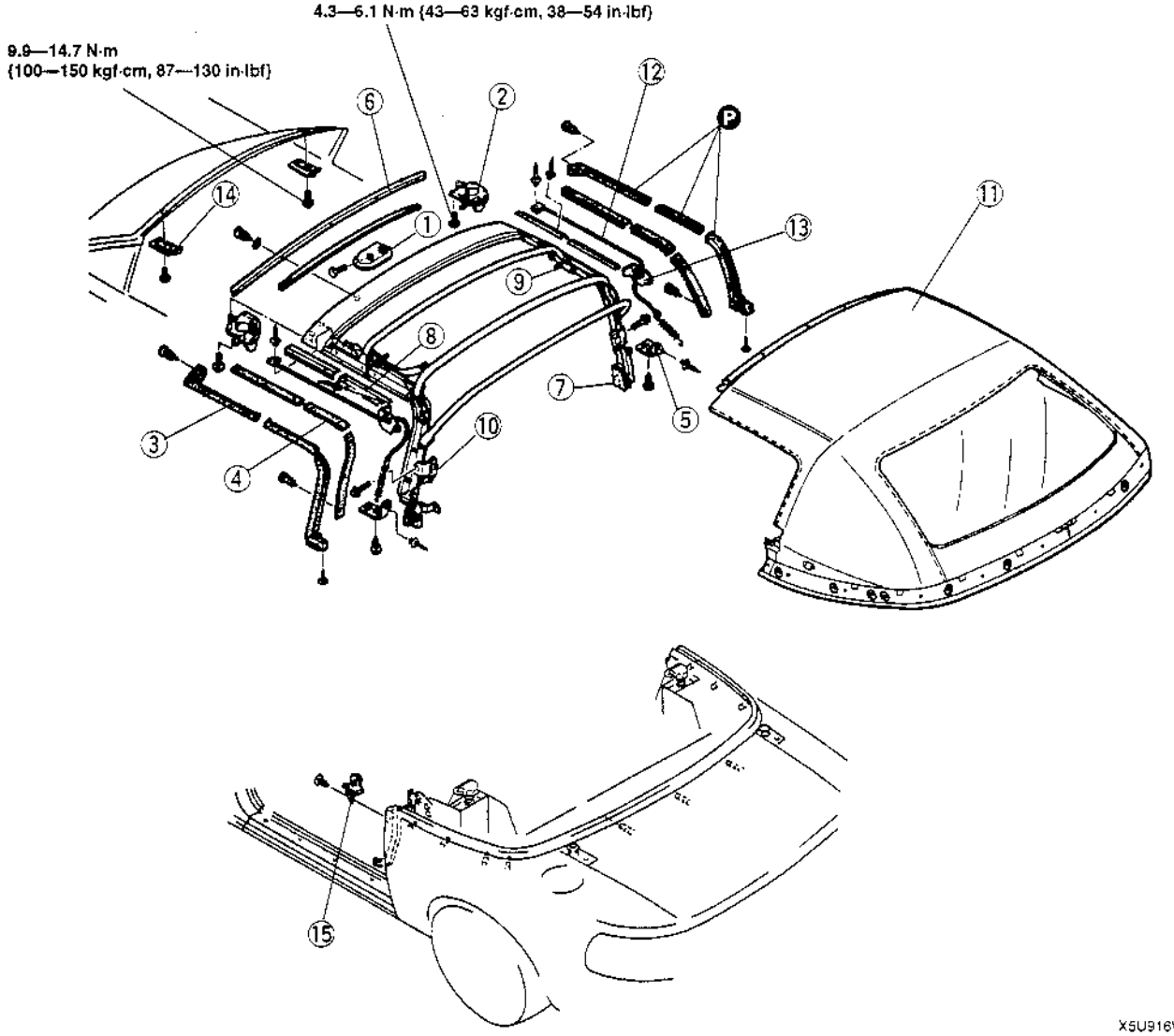

X5U916WB6

1	Top handle
2	Top lock
3	Weatherstrip
4	Retainer ☞ Disassembly Note ☞ Assembly Note
5	End plate ☞ Disassembly Note ☞ Assembly Note
6	Set plate ☞ Assembly Note
7	Link
8	Protector
9	Link stopper
10	Open stopper
11	Top fabric ☞ Disassembly Note ☞ Assembly Note
12	Cable ☞ Disassembly Note ☞ Assembly Note
13	Cable guide
14	Striker
15	Cab-side weatherstrip

Retainer Disassembly Note

1. Set the convertible top upside down on a workbench covered with clean, thick cloth.
2. Mark around the retainer installation screws with paint before removing them.

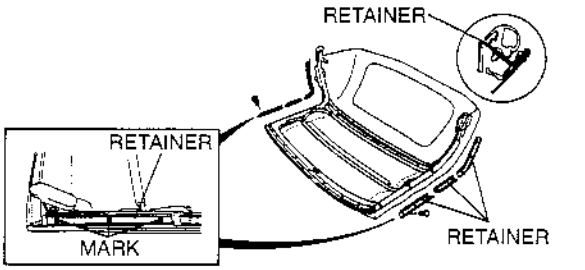

X5U916WB7

End Plate Disassembly Note

1. Remove the rivets from the link by using a drill.

   Drill size
   ϕ4.0 mm {ϕ0.16 in}

2. Remove the screws and remove the end plates from the link.

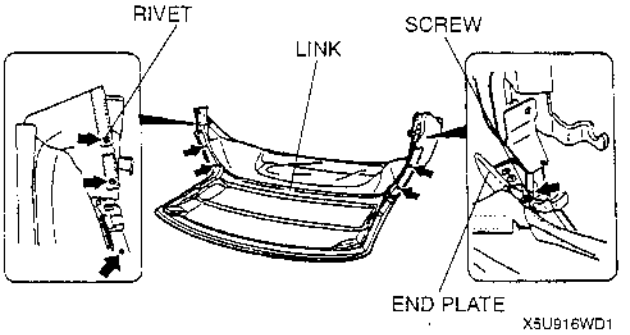

X5U916WD1

Top Fablic Disassembly Note

1. Fold the convertible top.
2. Remove the top fabric from the link.

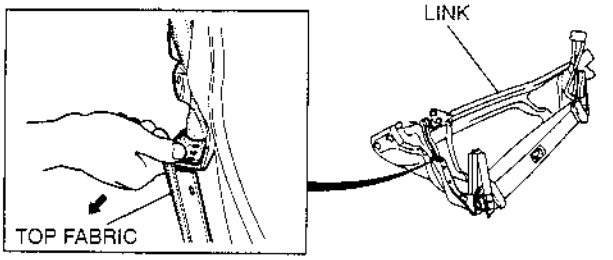

U5U91627

Cable Disassembly Note

1. Peel back the top fabric from the front header.
2. Remove the screws and disconnect the cables from the rear of the link.

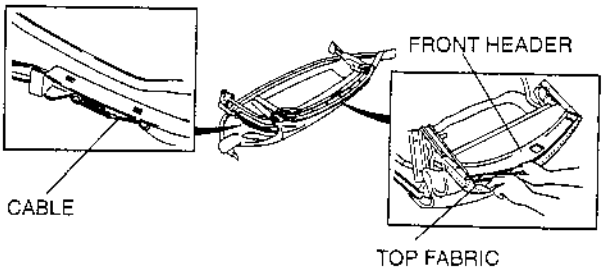

U5U91628

3. Unfold the convertible top and set it upright.
4. Remove the rivets from the link by using a drill.

   Drill size
   ϕ4.0 mm {ϕ0.16 in}

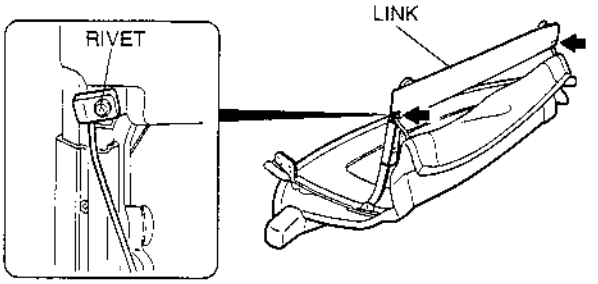

U5U91629

5. Pry back the bow retainers by using a tape-wrapped flathead screwdriver.
6. Remove the top fabric from the bow retainer.

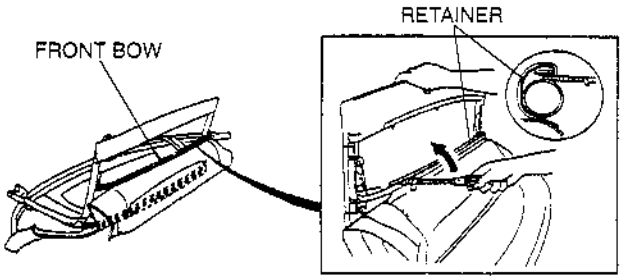

X5U916WD2

7. Remove the cables from the cable guide.
8. Remove the top fabric and cables from the link.

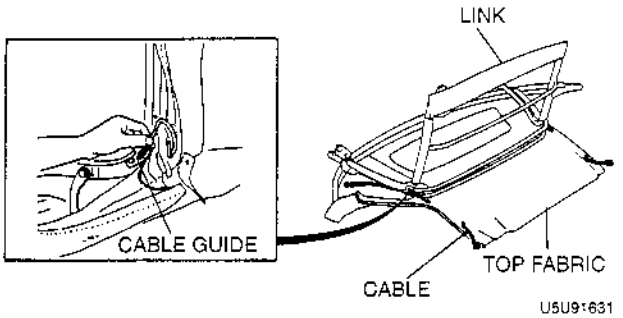

U5U91631

9. Remove the cables from the top fabric.

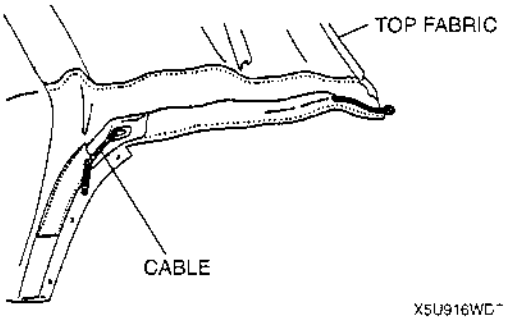

X5U916WD

Cable Assembly Note

- Thread the cable into the top fabric.

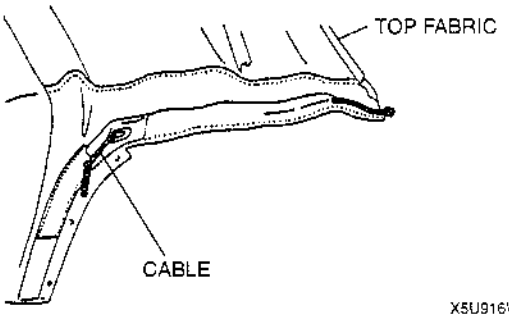

X5U916WD4

Top Fabric Assembly Note

1. Cover the workbench with thick cloth to prevent damaging the top fabric and rear window.
2. Place the link onto the top fabric.
3. Install the top fabric to the front bow.
4. Roll the top fabric over the bow retainer.

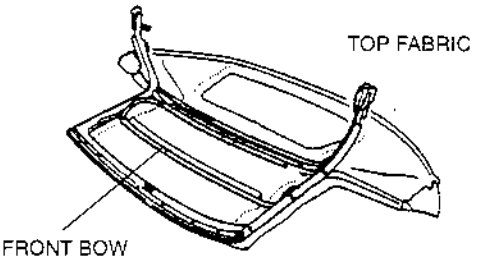

X5U916WD5

5. Hang the end of the top fabric on the bow retainer.

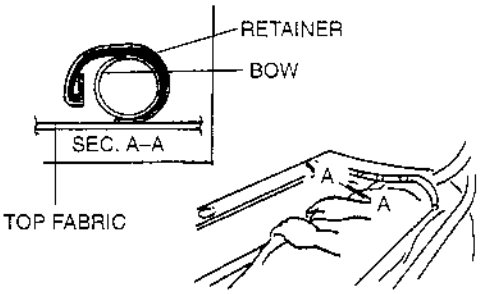

X5U916WD6

6. Clamp the top fabric to the bow by using water pump pliers which have been wrapped in tape. Pull the top fabric by hand to verify that it is held securely.

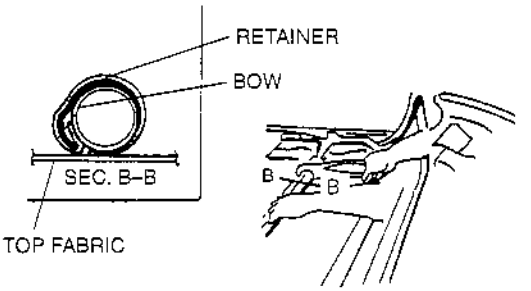

X5U916WD7

7. Set the convertible top upright.
8. Rivet the cables to the front of the link.

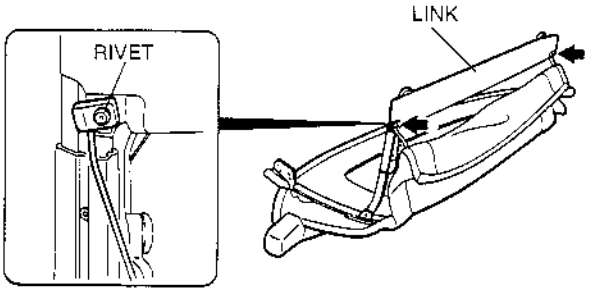

U5U91638

Set Plate Assembly Note

1. Turn the convertible top over and fold it.
2. Install the front of the top fabric to the front header.
3. Align the set plate and top fabric with the set plate installation holes.
4. Install the set plate to the link.

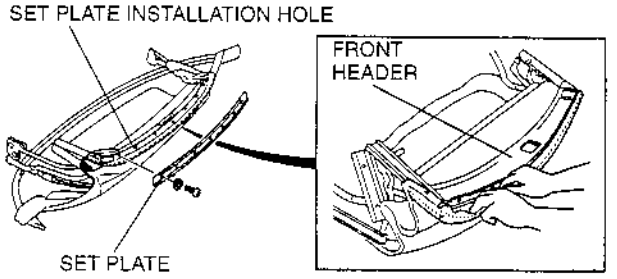

U5U91639

End Plate Assembly Note

1. Unfold the convertible top half-way.
2. Pass the cables through the cable guides.
3. Install the cables to the rear of the link.

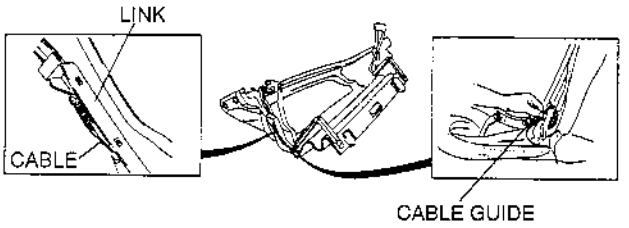

U5U91640

4. Fold the convertible top.
5. Install the top fabric to the link.

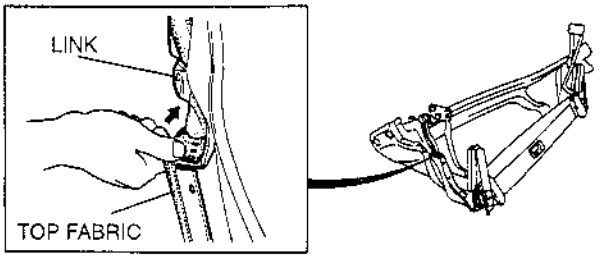

U5U91641

6. Unfold the convertible top.
7. Install the end plates to the link.
8. Rivet the top fabric to the link.

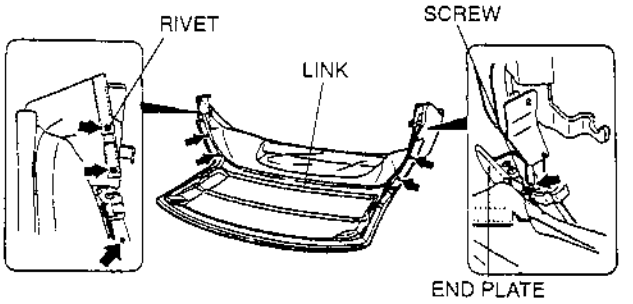

X5U916WD8

Retainer Assembly Note

- Install the retainers to the link, aligning the retainer marks with the retainer installation screws.

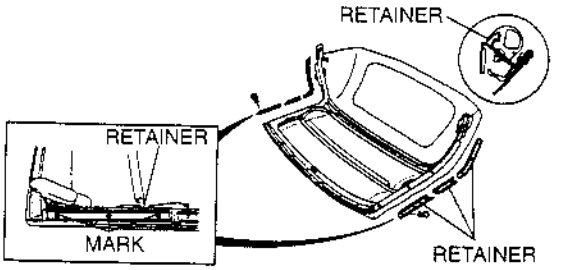

X5U916WB9

RETAINER ADJUSTMENT

X5U916W12

1. Remove the weatherstrip.
2. Loosen the retainer installation screws and adjust the retainer as necessary.
3. Tighten the screws and reinstall the weatherstrip.

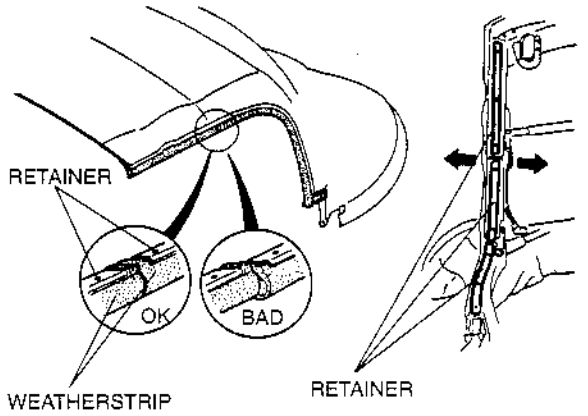

U5U91663

TOP FABRIC REPAIR

X5U916W13

Holes

1. Place the repair sheet (NC10 R1 211) over the damaged section. Cut both the top fabric and the repair sheet by using a razor knife and a straightedge.

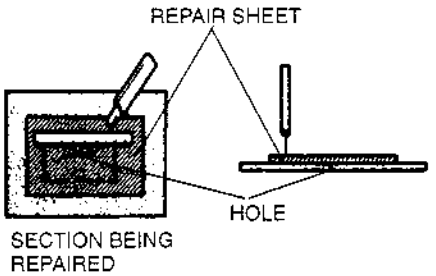

U5U91664

2. Cut another piece of repair sheet larger than the first for use as a back repair sheet.
3. Trim the top fabric and the repair sheets by using scissors.

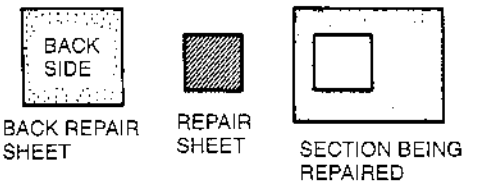

U5U91665

4. Degrease the repair sheets by using ethyl alchol.

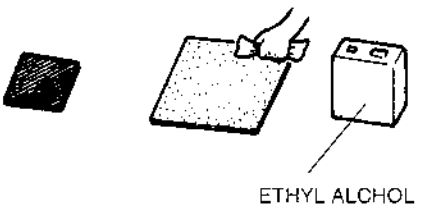

X5U916WC2

5. Apply a generous amount of adhesive agent (K180 W0 313) or equivalent to the section being repaired, the repair sheet, and the back repair sheet. Let stand for a few minutes.
6. Insert the repair sheet squarely into the section of the top fabric being repaired. Then install the back repair sheet from the underside of the top.

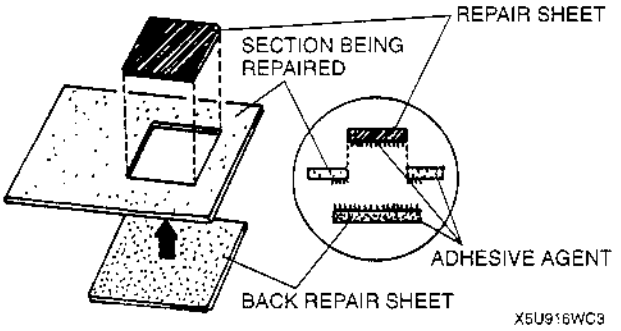

7. Press the repair sheets firmly together.
8. Let the top fabric stand until the adhesive agent is fully dry.

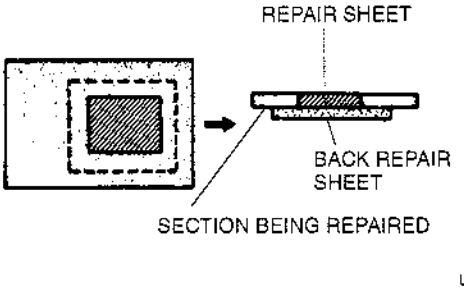

Tears

1. Cut a piece of repair sheet (NC10 R1 211) larger than the damaged section for use as a back repair sheet.
2. Degrease the repair sheet by using ethyl alchol.

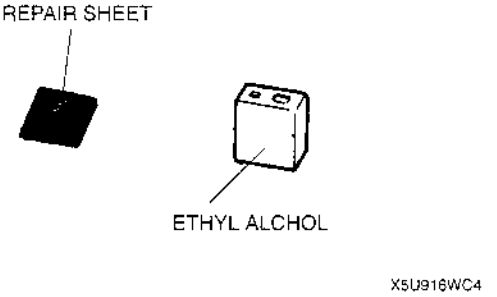

3. Apply a generous amount of adhesive agent (K180 W0 313) or equivalent to the section being repaired and the back repair sheet. Let stand for a few minutes.
4. Install the back repair sheet from the underside of the top.
5. Press the repair sections firmly together.
6. Let the top fabric stand until the adhesive agent is fully dry.

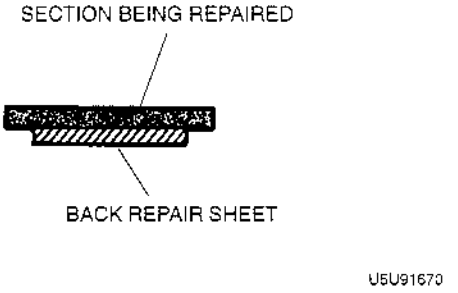

TOP FABRIC REMOVAL/INSTALLATION

X5U916W10

1. Cover over the rear deck area by using a protective rag.
2. Remove the rear package trim.
3. Remove in the order indicated in the table.
4. Install in the reverse order of removal.

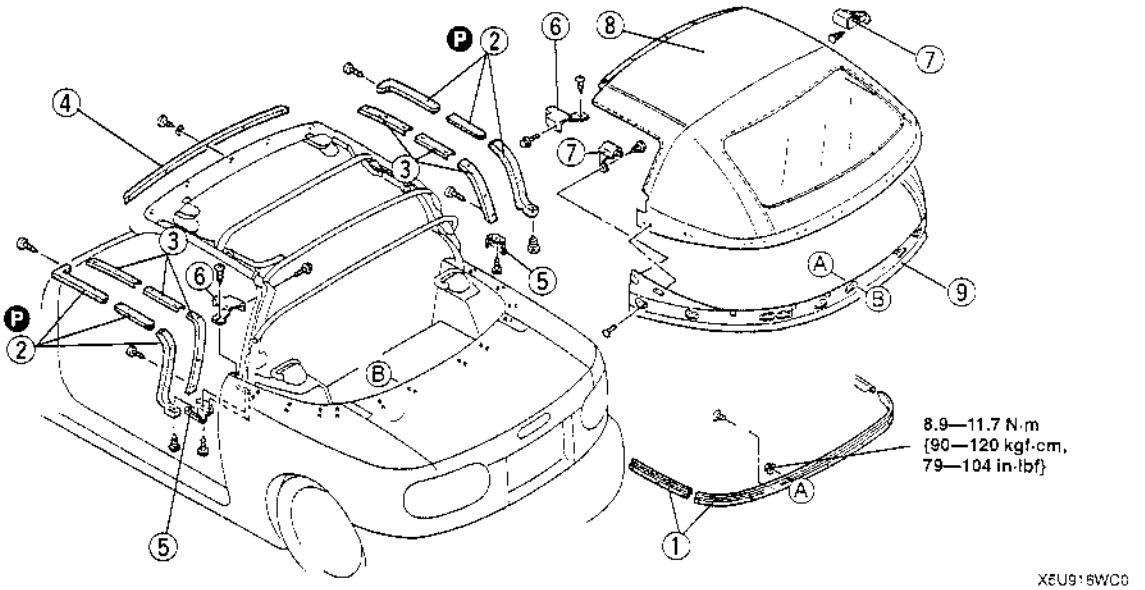

X5U916WC0

1	Set plate
2	Weatherstrip ☞ Removal Note
3	Retainer ☞ Removal Note
4	Set plate
5	End plate

6	Beltline cover
7	Beltline protector
8	Top fabric ☞ Removal Note ☞ Installation Note
9	Rain rail ☞ Removal Note ☞ Installation Note

Weatherstrip Removal Note
Vertical section

1. Lower the convertible top fully.
2. Remove the fastener as shown in the figure by using a fastener remover.

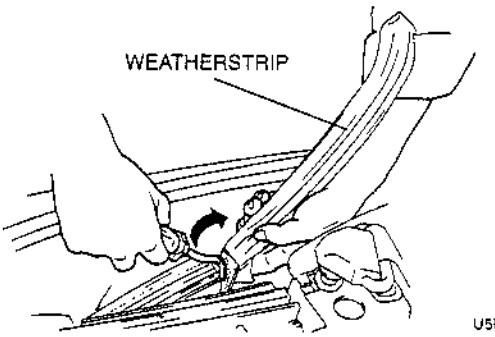

U5U91645

Retainer Removal Note

- Mark around the retainer installation screws with paint before removing them.

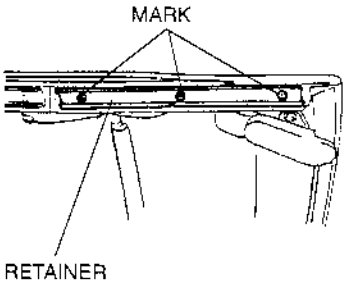

U5U91646

Top Fabric Removal Note

1. Remove the rivets from the link with a drill.

Drill size
ϕ4.0 mm {ϕ0.16 in}

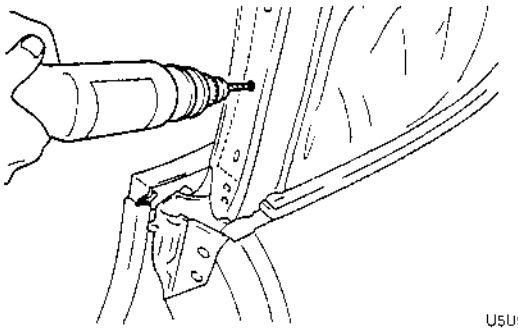
U5U91647

2. Peel the top fabric end.
3. Remove the rivets from the link by using a drill.

Drill size
ϕ4.0 mm {ϕ0.16 in}

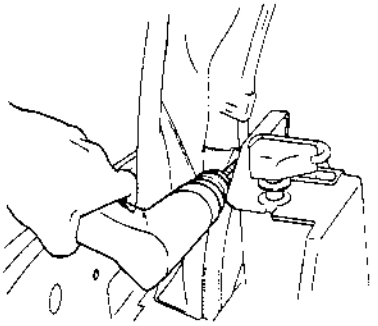
U5U91648

4. Lower the convertible top to release the cable spring tension, and unhook the spring.
5. Remove the cable from the top fabric.

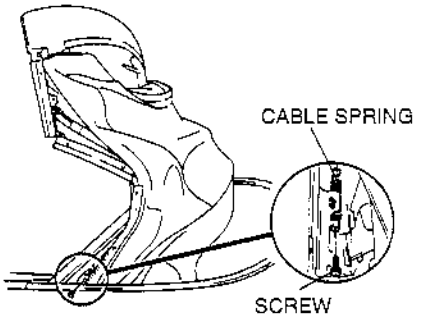

U5U91649

6. Pry back the front bow retainer by using a tape-wrapped flathead screwdriver.
7. Remove the top fabric from the bow retainer.

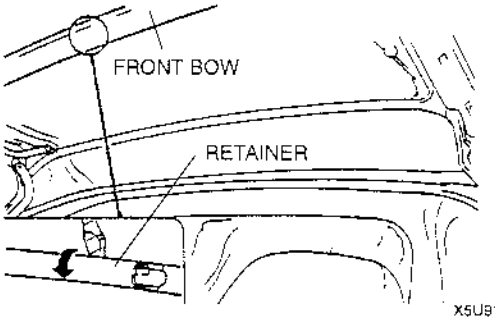

X5U916WD9

Rain Rail Removal Note

- Remove the rivets from the top fabric by using a drill.

Drill size
ϕ4.0 mm {ϕ0.16 in}

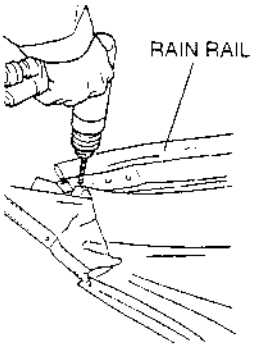

U5U91651

Rain Rail Installation Note
If the rivets will not be used

1. Degrease the rain rail by using white gasoline.
2. Install insulation tape to the rivet installation holes of the rain rail.

Insulation tape
Width: 20 mm {0.8 in}
Height: 15 mm {0.6 in}
Thickness: 3 mm {0.12 in}

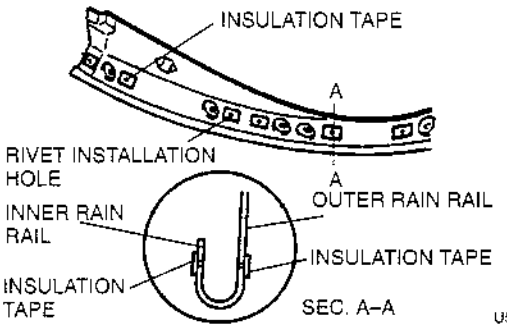

U5U91652

If the rivets will be used

1. Rivet the rain rail to the top fabric.

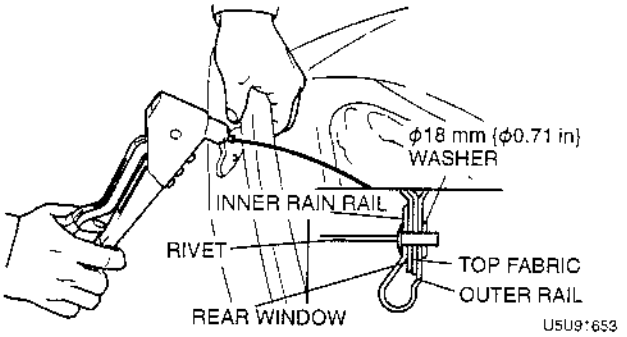

2. Flatten the stem by using a hammer.

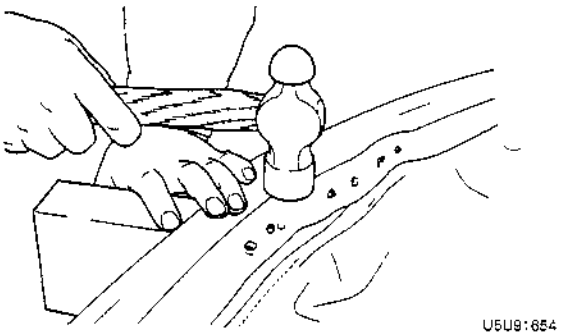

Top Fabric Installation Note

1. Place the top fabric onto the link.
2. Install the top fabric to the front bow, beginning from the rear bow.
3. Roll the top fabric over the bow retainer.
4. Hang the end of the top fabric on the bow retainer.
5. Clamp the top fabric to the bow by using water pump pliers which have been wrapped in tape.
6. Pull the top fabric by hand to verify that it is held securely.

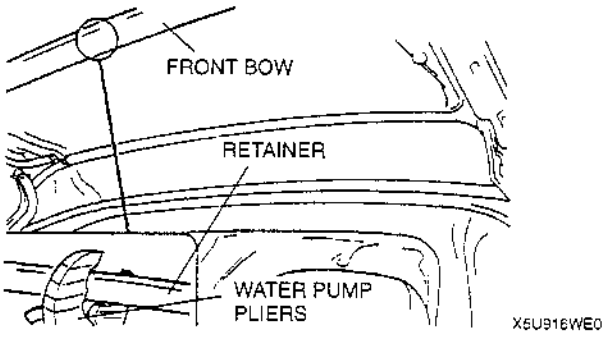

7. Inset a metal rod into the fabric as shown, tie the cable around the rod, and pull the cable through the fabric.

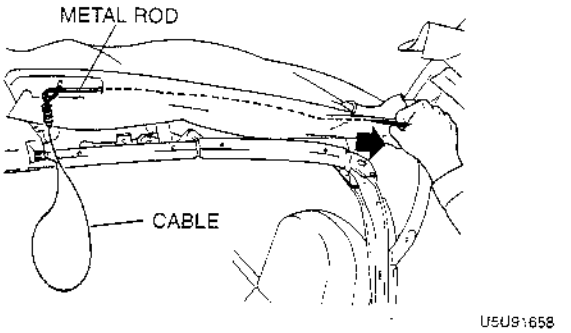

8. Raise the convertible top as shown in the figure.
9. Install the screw.

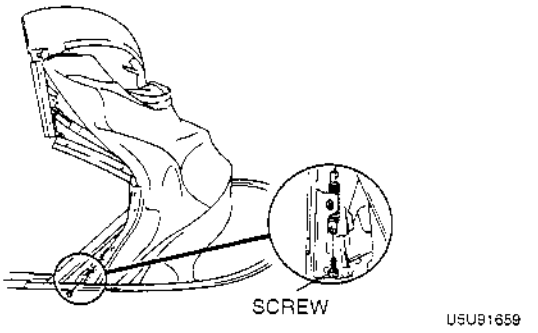

10. Rivet the top fabric upper side to the link.

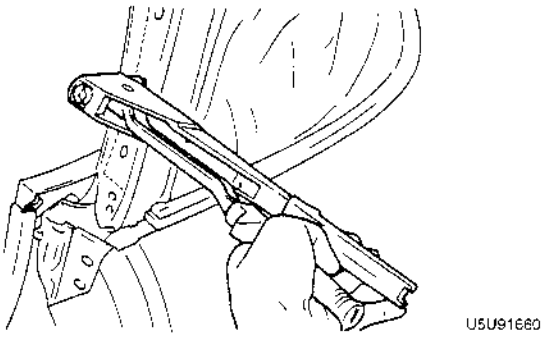

11. Peel the top fabric end.
12. Rivet the top fabric lower side to the link.

Note

- If the lower side rivet is difficult to install to the link, install the top fabric by using a tinnerman clip and a screw.

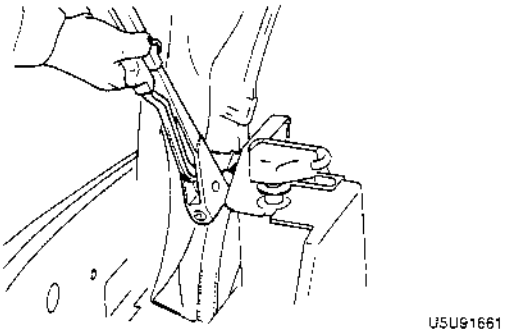

DETACHABLE HARDTOP ADJUSTMENT

X5U916W15

Top Lock

1. Lift the protector away from the top lock adjusting nut.
2. Turn the adjusting nut clockwise to decrease clearance A and height B; turn the nut counterclockwise to increase them.

Clearance
A: 3—7 mm {0.12—0.27 in}
B: –2—2 mm {–0.08—0.07 in}

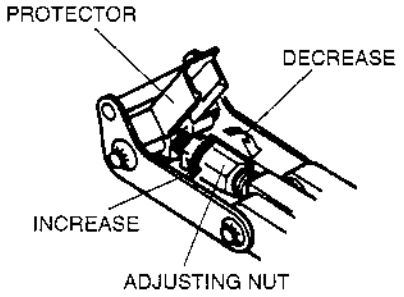

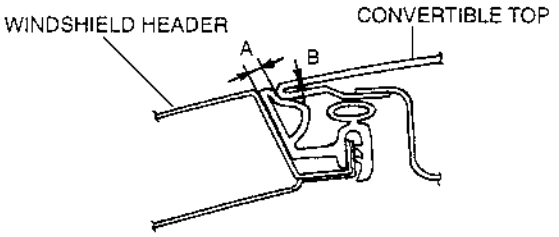

X5U916WB5

3. Secure the adjusting nut with the protector.

Side Lock

1. Lift the protector away from the side lock adjusting nut.
2. Turn the adjusting nut clockwise to tighten the striker and side lock engagement; turn the nut counterclockwise to loosen the engagement.
3. Secure the adjusting nut by using the protector.

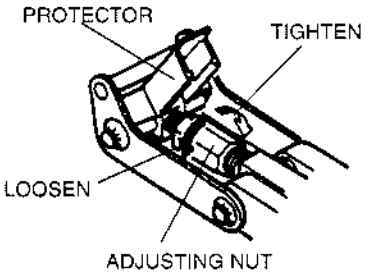

U5U91673

Rear Deck Lock

1. Remove the screw and open the lock cover.

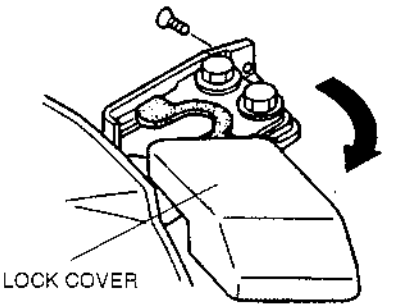

U5U91674

2. Loosen the plate installation bolts.
3. Install the detachable hardtop to the body.
4. Move the plate right, left, fore, or aft until it is tight.

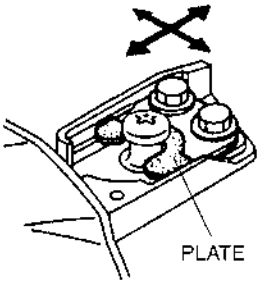

U5U91675

5. Tighten the plate installation bolts.

Tightening torque
18—26 N·m {1.8—2.7 kgf·m, 14—19 ft·lbf}

6. Close the lock cover and install the screw.

DETACHABLE HARDTOP DISASSEMBLY/ASSEMBLY

X5U916W14

1. Disassemble in the order indicated in the table.
2. Assemble in the reverse order of disassembly.

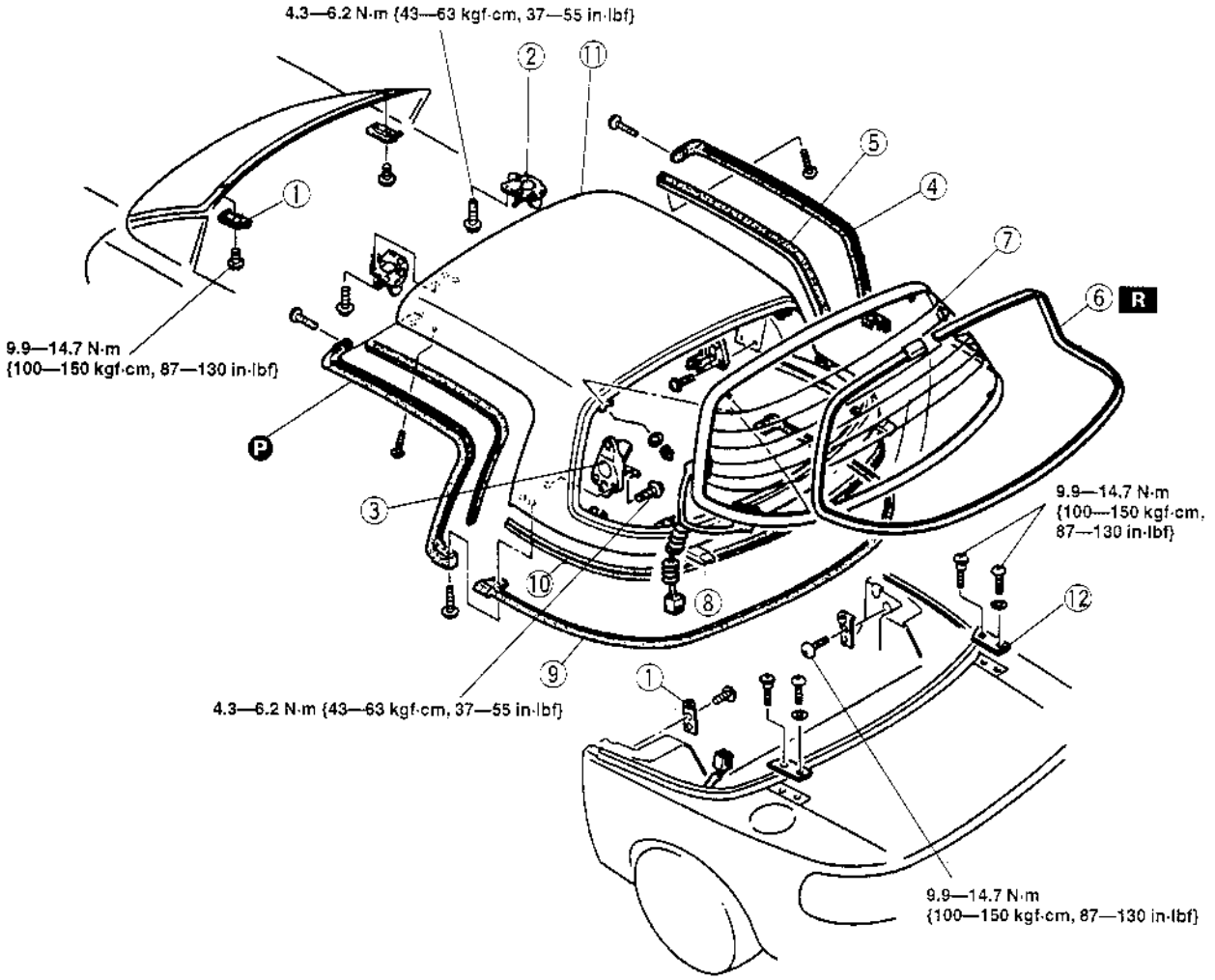

X5U916WC5

1	Striker
2	Top lock
3	Side lock
4	Weatherstrip
5	Retainer
6	Rear window molding ☞ 09–16 REAR WINDOW MOLDING REMOVAL ☞ 09–16 REAR WINDOW MOLDING INSTALLATION

7	Rear window glass ☞ 09–12 REAR WINDOW GLASS REMOVAL ☞ 09–12 REAR WINDOW GLASS INSTALLATION
8	Rear deck lock
9	Rear weatherstrip
10	Edge protector
11	Detachable hardtop
12	Rear deck plate

09–17 INTERIOR TRIM

DASHBOARD REMOVAL/INSTALLATION

X5U917W01

1. Disconnect the negative battery cable.
2. Remove the driver-side air bag module. (Refer to 08–10 DRIVER-SIDE AIR BAG MODULE REMOVAL/INSTALLATION.)
3. Remove the passenger-side air bag module. (Refer to 08–10 PASSENGER-SIDE AIR BAG MODULE REMOVAL/INSTALLATION.)
4. Remove the A-pillar trim. (Refer to 09–17 A-PILLAR TRIM REMOVAL/INSTALLATION.)
5. Remove the console. (Refer to 09–17 CONSOLE REMOVAL/INSTALLATION.)
6. Remove the lower panel.
7. Remove the instrument cluster. (Refer to 09–22 INSTRUMENT CLUSTER REMOVAL/INSTALLATION.)
8. Remove the glove compartment. (Refer to 09–17 GLOVE COMPARTMENT REMOVAL/INSTALLATION.)
9. Remove the hood release lever.
10. Remove the control wire of the heater unit and blower unit. (Refer to 07–40 HEATER CONTROL UNIT REMOVAL.) (Refer to 07–40 HEATER CONTROL UNIT INSTALLATION.)
11. Remove the installation bolts and nuts fixing the steering shaft to the dashboard, and pull down the steering shaft.
12. Remove in the order indicated in the table.
13. Install in the reverse order of removal.

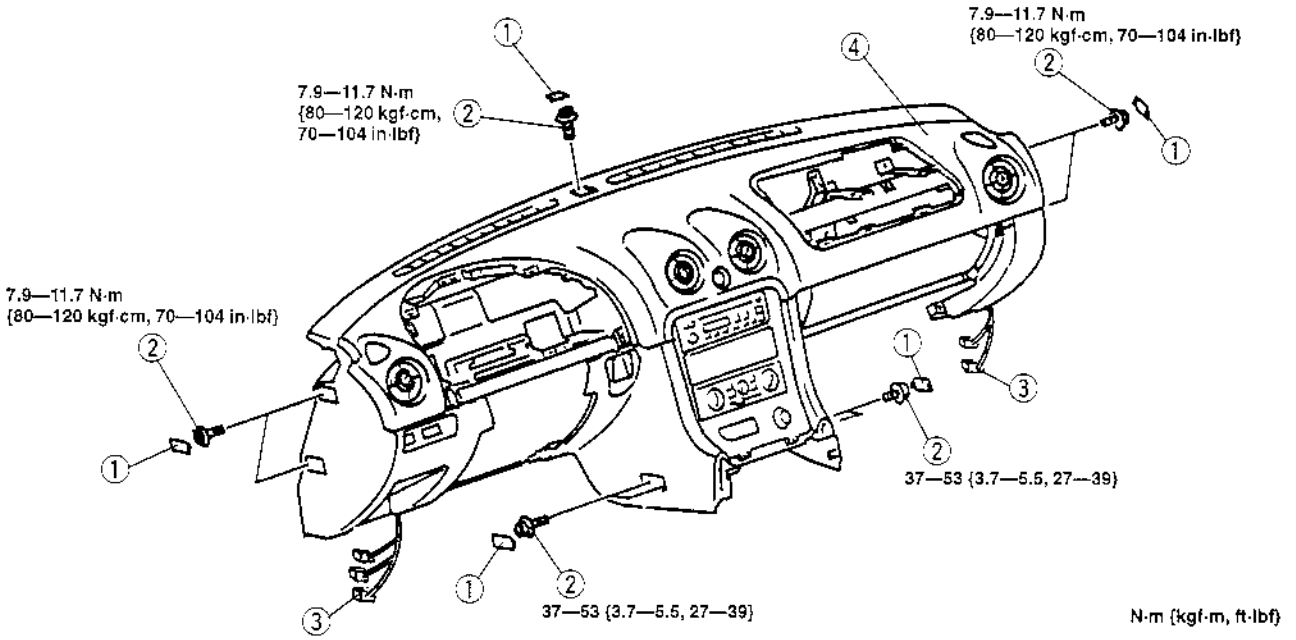

X5U917WA0

1	Cover
2	Bolt

3	Connector
4	Dashboard

DASHBOARD DISASSEMBLY/ASSEMBLY

X5U917W02

1. Disassemble in the order indicated in the table.
2. Assemble in the reverse order of disassembly.

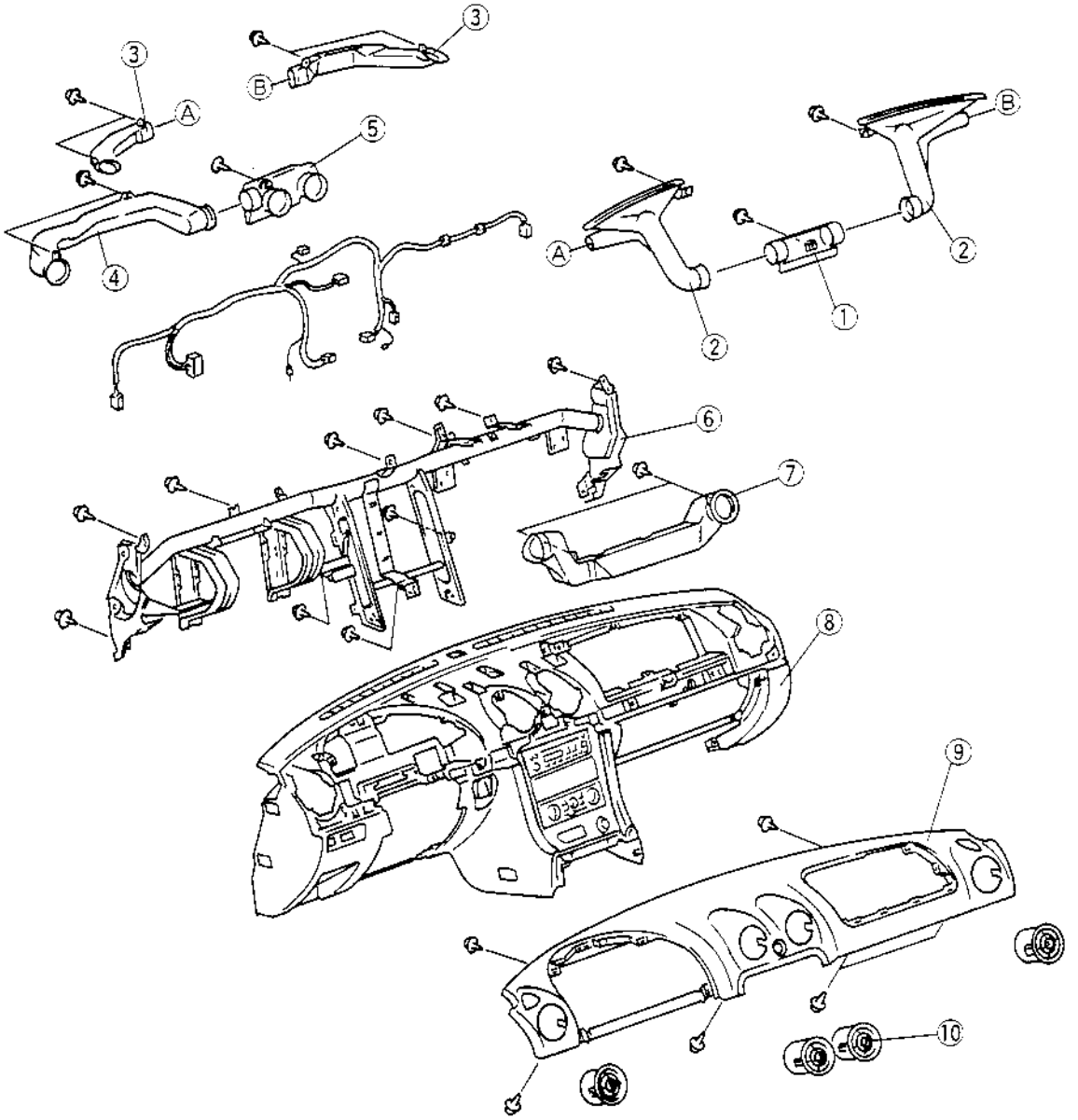

X5U917WA1

1	Defroster duct
2	Defroster nozzle
3	Side demister nozzle
4	Duct
5	Center duct

6	Dashboard member
7	Duct
8	Dashboard
9	Pad
10	Ventilator grille

CENTER PANEL REMOVAL/INSTALLATION

X5U917W09

1. Disconnect the negative battery cable.
2. Remove the console.
3. Remove the screws.
4. Pull the center panel to disengage the clips A and B from the body.
5. Disconnect the cigarette lighter connector.
6. Install in the reverse order of removal.

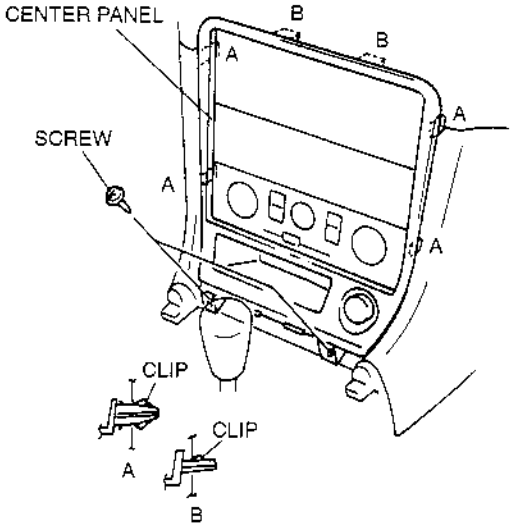

X5U917WA8

COLUMN COVER REMOVAL/INSTALLATION

X5U917W07

1. Remove the screws to remove the column cover.
2. Install in the reverse order of removal.

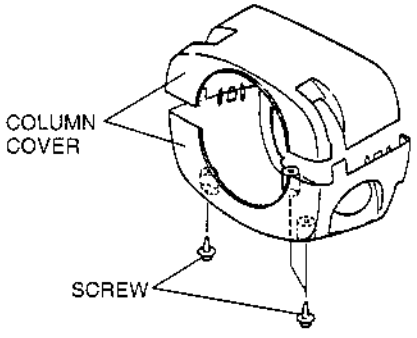

X5U917WA6

CONSOLE REMOVAL/INSTALLATION

X5J917WC4

1. Disconnect the negative battery cable.
2. Remove in the order indicated in the table.
3. Install in the reverse order of removal.

1	Ashtray
2	Power window switch
3	Shift lever knob (MT)
4	Screw
5	Console

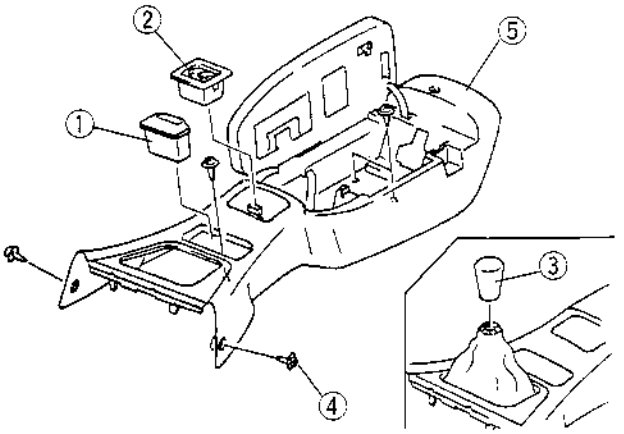

X5U917WA3

CONSOLE DISASSEMBLY/ASSEMBLY

X5J917WC5

1. Disassemble in the order indicated in the table.
2. Assemble in the reverse order of disassembly.

1	Console lid outer
2	Console lid inner
3	Front console
4	Set plate (MT)
5	Boot (MT)
6	Console lid stopper
7	Plate
8	Spring
9	Cup holder
10	Console lid lock
11	Cover
12	Console lid key cylinder

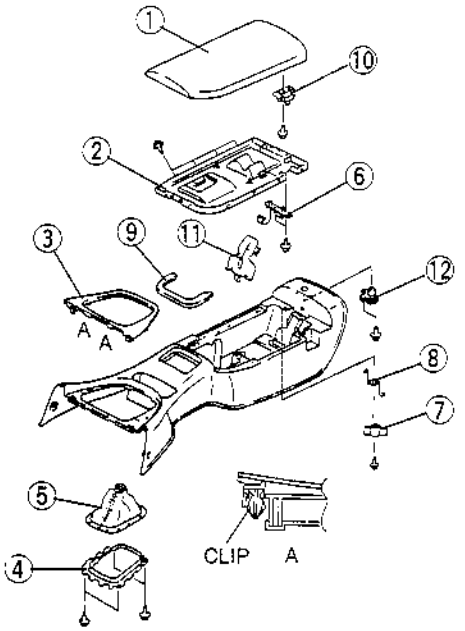

X5U917WA4

GLOVE COMPARTMENT REMOVAL/INSTALLATION

X5U917W03

1. Bend the stoppers inward to remove.
2. Turn the glove compartment downward and pull the clip.
3. Slide the glove compartment right side to disengage the pin.
4. Install in the reverse order of removal.

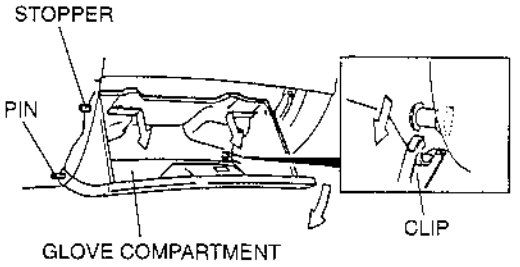

X5U917WA2

LOWER PANEL REMOVAL/INSTALLATION

X5U917W06

1. Remove the screws.
2. Pull the lower panel to disengage the hooks C and pins B from the body.
3. Pull the lower panel downward to disengage the hooks A from the body.
4. Install in the reverse order of removal.

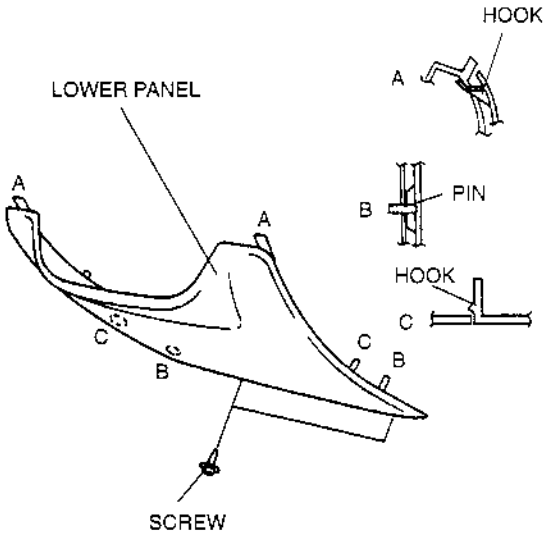

X5U917WA5

METER HOOD REMOVAL/INSTALLATION

X5U917W08

1. Pull the meter hood to disengage the clips A and pin B from the body.

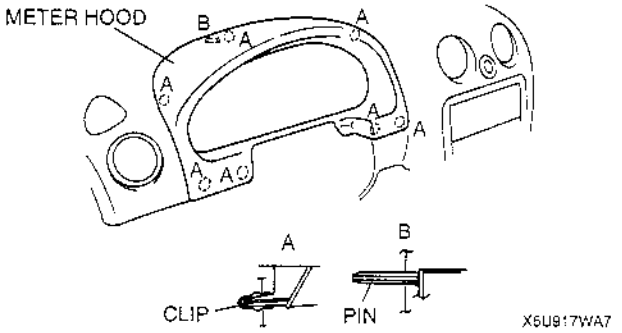

2. Install in the reverse order of removal.

DOOR TRIM REMOVAL/INSTALLATION

X5U917W14

1. Remove the regulator handle if equipped with manual window. (Refer to 09–12 REGULATOR HANDLE REMOVAL.) (Refer to 09–12 REGULATOR HANDLE INSTALLATION.)
2. Remove the screw.
3. Remove the inner handle cover.
4. Remove the fasteners.

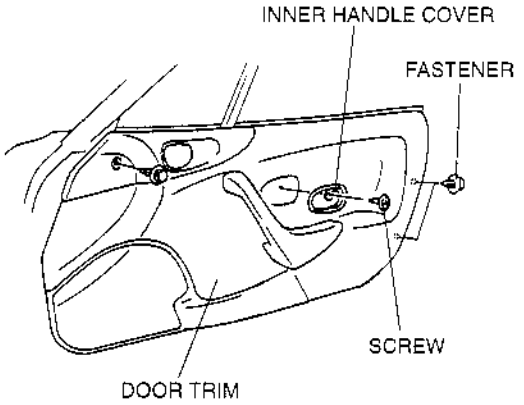

X5U917WB3

5. Pull the door trim to disengage the clips A and B from the body.
6. Lift the door trim to disengage hooks C and D from the body.

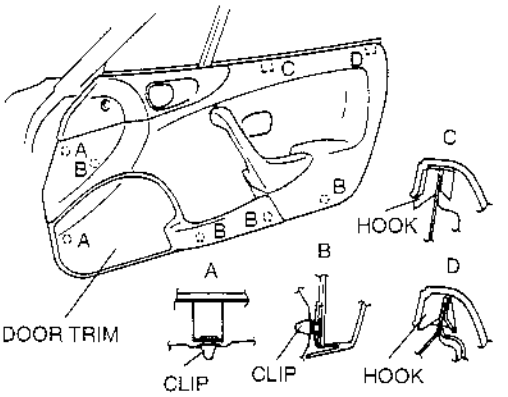

X5U917WB4

7. Install in the reverse order of removal.

A-PILLAR TRIM REMOVAL/INSTALLATION

X5U917W11

1. Remove the front header trim.
2. Pull the A-pillar trim to disengage the clips A and pin B from the body.
3. Pull the A-pillar trim upward to disengage the hook C from the body.

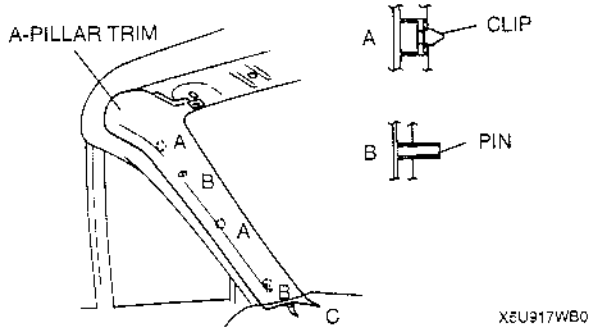

4. Install in the reverse order of removal.

FRONT HEADER TRIM REMOVAL/INSTALLATION

X5U917W10

1. Disconnect the negative battery cable.
2. Remove the striker.
3. Remove the sunvisor.
4. Remove the interior light. (Refer to 09–18 INTERIOR LIGHT REMOVAL/INSTALLATION.)
5. Pull the front header trim to disengage the clips A, B and pin C from the body.

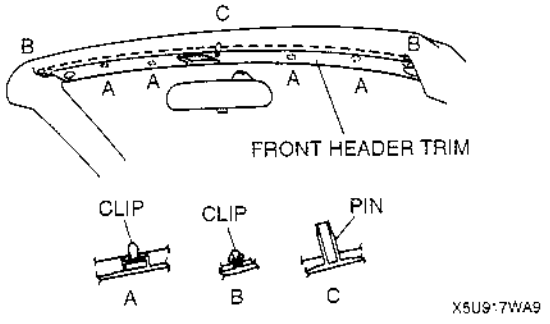

6. Install in the reverse order of removal.

QUARTER TRIM REMOVAL/INSTALLATION

X5U917W15

1. Remove the scuff plate.
2. Remove the beltline cover.
3. Remove the seaming welt.
4. Remove the bolt and fastener.
5. Remove the cover.
6. Pull the quarter trim to disengage the clips A and pins B from the body.

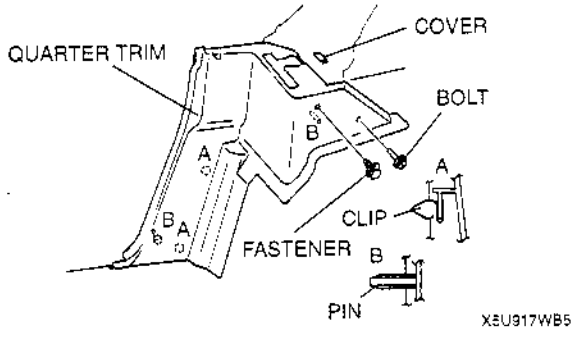

7. Slide the quarter trim front side to remove it.
8. Install in the reverse order of removal.

REAR PACKAGE TRIM REMOVAL/INSTALLATION

X5U917W19

1. Remove the quarter trim. (Refer to 09–17 QUARTER TRIM REMOVAL/INSTALLATION.)
2. Close the convertible top fully.
3. Remove the fasteners, then the rear package trim.
4. Install in the reverse order of removal.

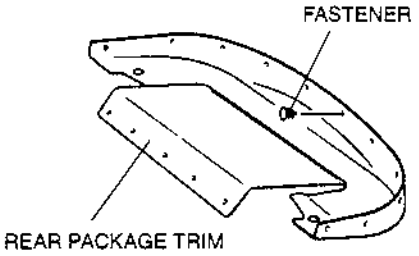

X5U917WB6

SCUFF PLATE REMOVAL/INSTALLATION

X5U917W13

1. Pull the scuff plate upward to disengage the clips A, C and pin B from the body.
2. Install in the reverse order of removal.

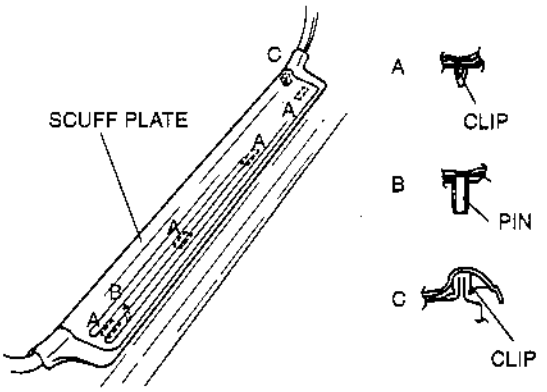

X5U917WB2

FRONT SIDE TRIM REMOVAL/INSTALLATION

X5U917W12

1. Remove the scuff plate.
2. Remove the fastener.
3. Pull the front side trim to disengage the clip A and pins B from the body.
4. Install in the reverse order of removal.

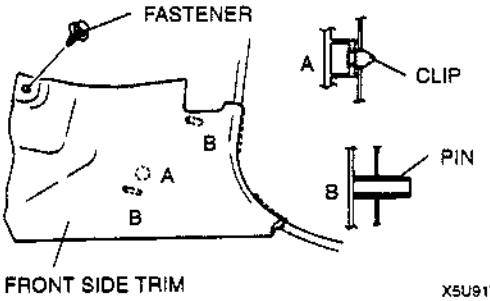

X5U917WB1

TRUNK END TRIM REMOVAL/INSTALLATION

X5U917W16

1. Remove the fasteners, then the trunk end trim.
2. Install in the reverse order of removal.

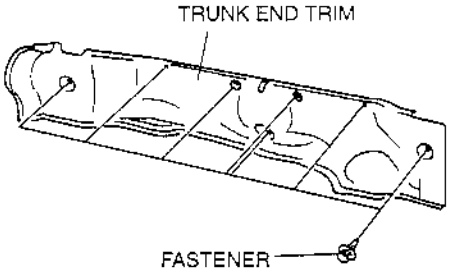

X5U917WB7

TRUNK SIDE TRIM REMOVAL/INSTALLATION

X5U917W17

1. Remove the fasteners, then the trunk side trim.
2. Install in the reverse order of removal.

DRIVER'S SIDE

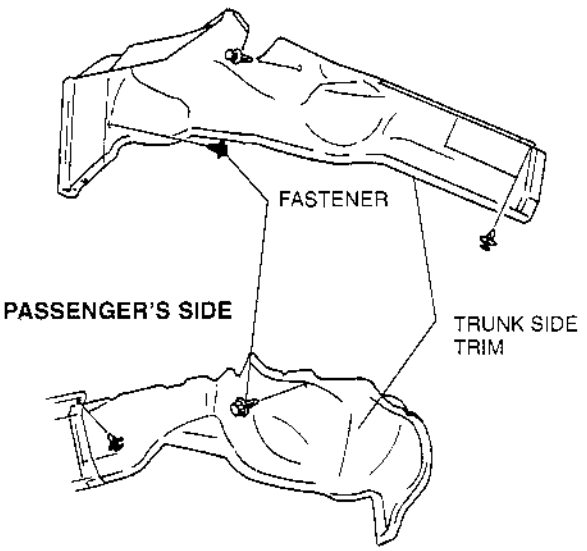

X5U917WB8

FLOOR COVERING REMOVAL/INSTALLATION

X5U917W20

1. Disconnect the negative battery cable.
2. Remove the seat.
3. Remove the dashboard. (Refer to 09–17 DASHBOARD REMOVAL/INSTALLATION.)
4. Remove the heater unit. (Refer to 07–40 HEATER UNIT REMOVAL/INSTALLATION.)
5. Remove the front side trim. (Refer to 09–17 FRONT SIDE TRIM REMOVAL/INSTALLATION.)
6. Remove the rear package trim. (Refer to 09–17 REAR PACKAGE TRIM REMOVAL/INSTALLATION.)
7. Remove the rear end mat.
8. Remove the seat belt. (Refer to 08–11 SEAT BELT REMOVAL/INSTALLATION.)
9. Remove the footrest.
10. Remove the fasteners.
11. Disengage the hooks A from the body.
12. Remove the floor covering.

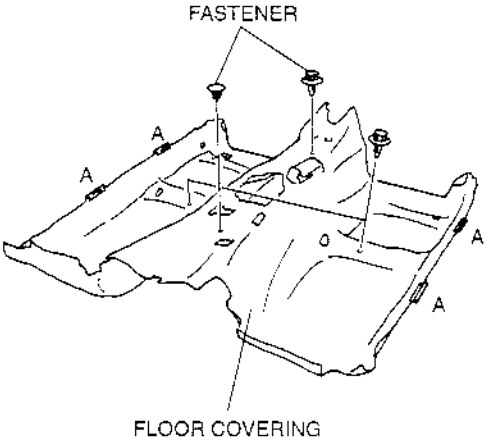

X5U917WC0

13. Install in the reverse order of removal.

REAR END MAT REMOVAL/INSTALLATION

X5U917W18

1. Remove the fasteners, then the rear end mat.

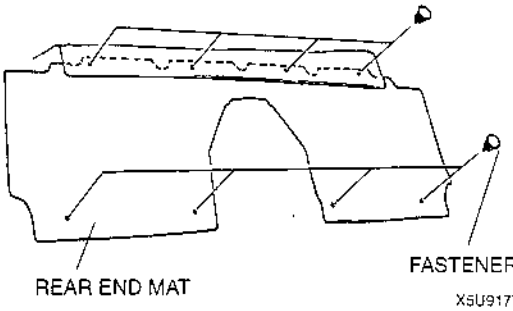

X5U917WB9

2. Install in the reverse order of removal.

09–18 LIGHTING SYSTEM

HEADLIGHT ADJUSTMENT

X5U918W01

1. Adjust the tire air pressure to the specification.
2. Position the unloaded vehicle on a flat, level surface.
3. Seat one person in the driver's seat.
4. Position the vehicle straight ahead and perpendicularly to a wall.
5. Set the headlights **7.6 m {25 ft}** from the wall.
6. While adjusting one headlight, disconnect the connector of the other.
7. Adjust the headlights by turning the adjusting screws as shown in the figure. Loosen the screws first, then tighten them.

Note

- If the adjusting screws are tightened first, then loosened, they will continue to loosen when the vehicle is in motion and may cause the headlights to become misaligned.

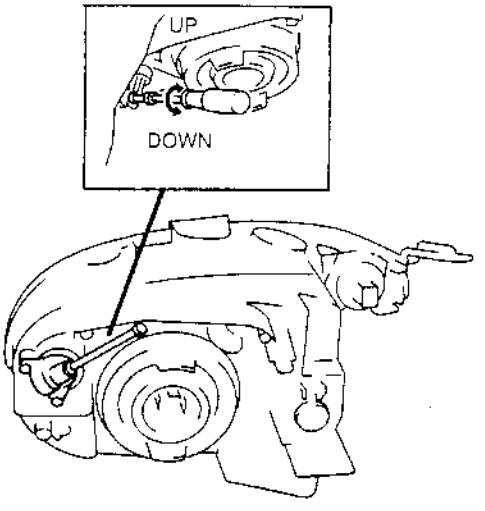

X5U918WA0

FRONT COMBINATION LIGHT REMOVAL/INSTALLATION

X5U918W02

1. Disconnect the negative battery cable.
2. Remove the front bumper. (Refer to 09–10 FRONT BUMPER REMOVAL/INSTALLATION.)
3. Remove in the order indicated in the table.
4. Install in the reverse order of removal.
5. Adjust the headlight aiming. (Refer to 09–18 HEADLIGHT ADJUSTMENT.)

1	Front combination light connector
2	Bolt
3	Front combination light

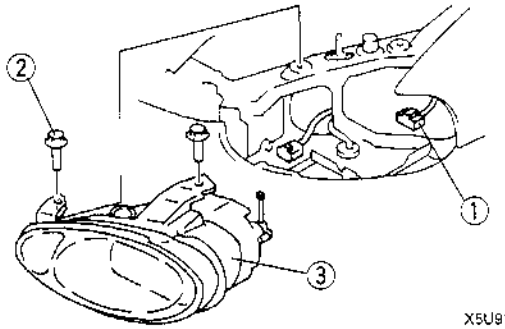

X5U918WA1

HEADLIGHT BULB REMOVAL/INSTALLATION

X5U918W03

Caution

- **A halogen bulb generates extremely high heat when it is used. If the surface of the bulb is soiled, excessive heat will build up and the light's life will be shortened. When replacing the bulb, hold the metal flange, not the glass.**

1. Disconnect the negative battery cable.
2. Remove in the order indicated in the table.
3. Install in the reverse order of removal.

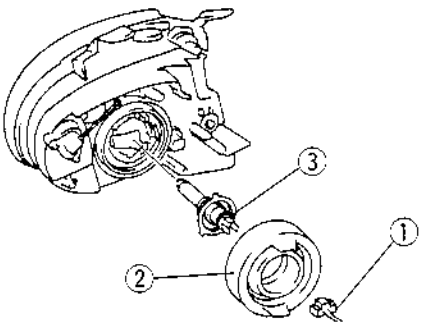

X5U918WA2

1	Headlight bulb connector
2	Cover
3	Headlight bulb

PARKING LIGHT/FRONT TURN LIGHT BULB REMOVAL/INSTALLATION

X5U918W05

1. Disconnect the negative battery cable.
2. Remove in the order indicated in the table.
3. Install in the reverse order of removal.

1	Parking light/front turn light bulb connector
2	Socket
3	Parking light/front turn light bulb

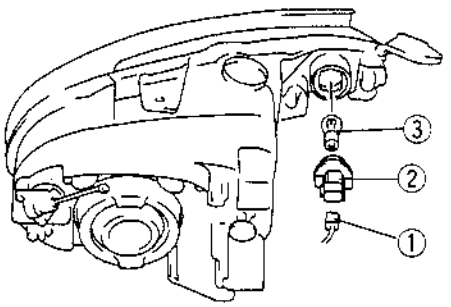

X5U918WA4

FRONT SIDE MARKER LIGHT REMOVAL/INSTALLATION

X5U918W06

1. Disconnect the negative battery cable.
2. Remove in the order indicated in the table.
3. Install in the reverse order of removal.

1	Screw
2	Front side marker light
3	Front side marker light connector
4	Socket
5	Front side marker light bulb

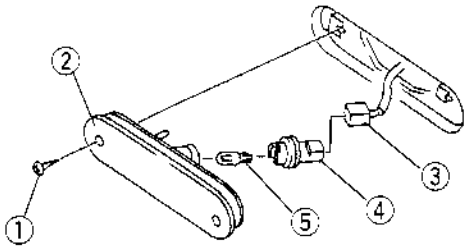

X5U918WA5

REAR COMBINATION LIGHT REMOVAL/INSTALLATION

X5U918W07

1. Disconnect the negative battery cable.
2. Remove the trunk end trim. (Refer to 09–17 TRUNK END TRIM REMOVAL/INSTALLATION.)
3. Remove in the order indicated in the table.
4. Install in the reverse order of removal.

1	Rear combination light connector
2	Screw
3	Nut
4	Rear combination light
5	Socket
6	Brake light/taillight bulb
7	Rear turn light bulb
8	Back-up light bulb

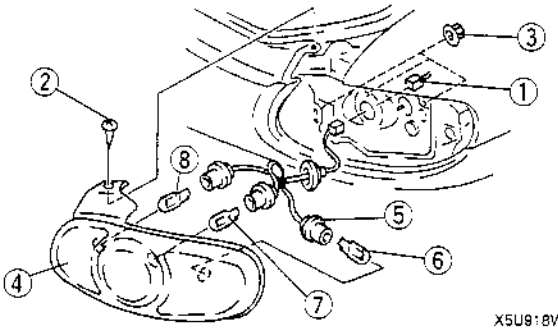

X5U918WA6

HIGH-MOUNT BRAKE LIGHT REMOVAL/INSTALLATION

X5U918W09

1. Disconnect the negative battery cable.
2. Remove in the order indicated in the table.
3. Install in the reverse order of removal.

1	High-mount brake light connector
2	Nut
3	High-mount brake light ☞ Removal Note
4	Socket
5	High-mount brake light bulb

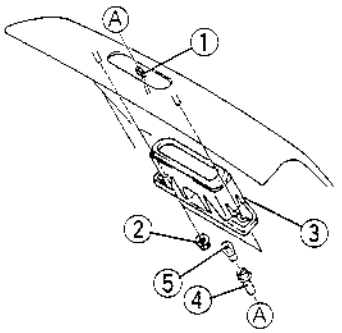

X5U918WA8

High-mount Brake Light Removal Note

1. Insert a tape-wrapped flathead screwdriver into the left side opening.

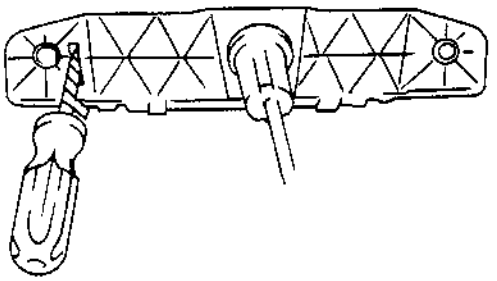

X5U918WA9

2. Press the hook of the high-mount brake light with a tape-wrapped flathead screwdriver.
3. Pull the high-mount brake light out from the body.

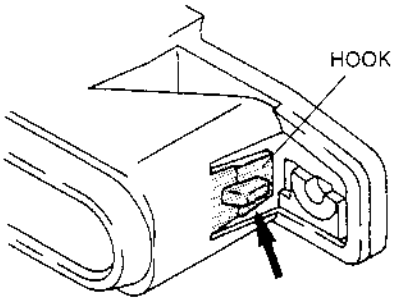

X5U918WAA

LICENSE PLATE LIGHT REMOVAL/INSTALLATION

X5U918W10

1. Disconnect the negative battery cable.
2. Remove in the order indicated in the table.
3. Install in the reverse order of removal.

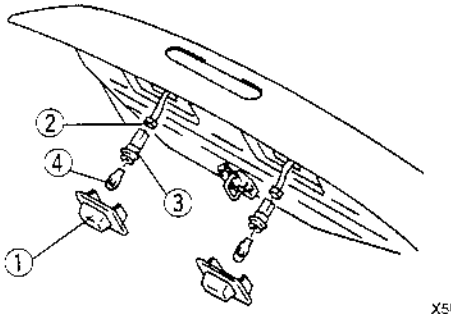

X5U918WAB

1	License plate light ☞ Removal Note
2	License plate light connector
3	Socket
4	License plate light bulb

License Plate Light Removal Note

- (1) Slide the license plate light to the arrow mark and (2) remove it.

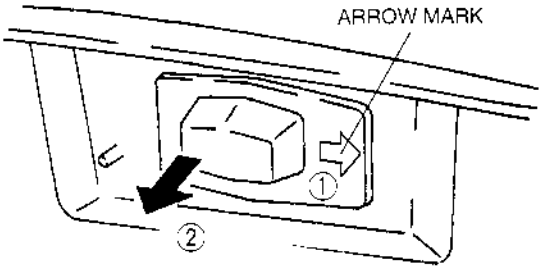

X5U918WAC

BACK-UP LIGHT SWITCH REMOVAL/INSTALLATION

X5U918W16

1. Disconnect the negative battery cable.
2. Remove in the order indicated in the table.
3. Install in the reverse order of removal.

1	Back-up light switch connector
2	Back-up light switch

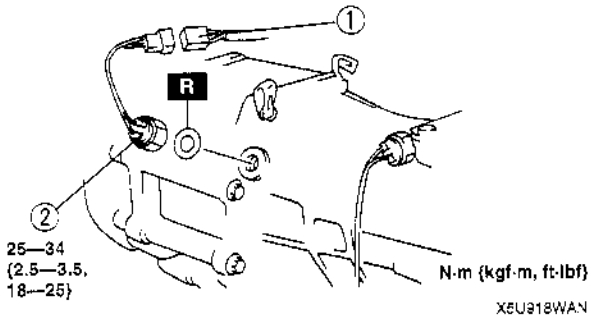

X5U918WAN

BACK-UP LIGHT SWITCH INSPECTION

1. Disconnect the back-up light switch connector.
2. Inspect for continuity between the back-up light switch terminals by using an ohmmeter.

O—O : Continuity

Shift lever position	Terminal	
	A	B
Reverse	O	O
Other		

X5U918WAP

X5U918W17

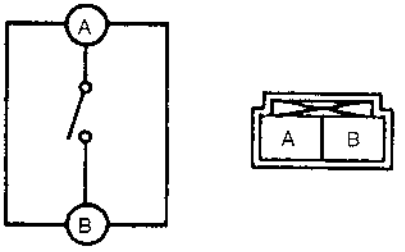

X5U918WAV

3. If not as specified, replace the back-up light switch.

COMBINATION SWITCH REMOVAL/INSTALLATION

1. Disconnect the negative battery cable.
2. Remove the driver-side air bag module. (Refer to 08–10 DRIVER-SIDE AIR BAG MODULE REMOVAL/INSTALLATION.)
3. Remove the steering wheel. (Refer to 06–12 STEERING WHEEL AND COLUMN REMOVAL/INSTALLATION.)
4. Remove the column cover.
5. Remove the clock spring. (Refer to 08–10 CLOCK SPRING REMOVAL/INSTALLATION.)
6. Remove in the order indicated in the table.
7. Install in the reverse order of removal.

X5U918W11

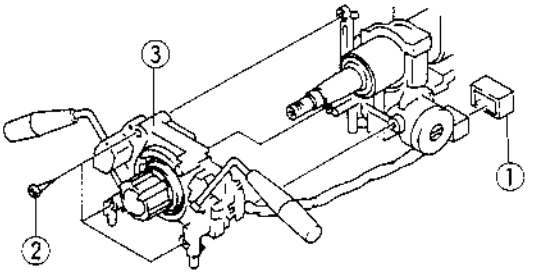

X5U918WAD

1	Combination switch connector
2	Screw
3	Combination switch

COMBINATION SWITCH DISASSEMBLY/ASSEMBLY

X5U918W12

1. Disassemble in the order indicated in the table.
2. Assemble in the reverse order of disassembly.

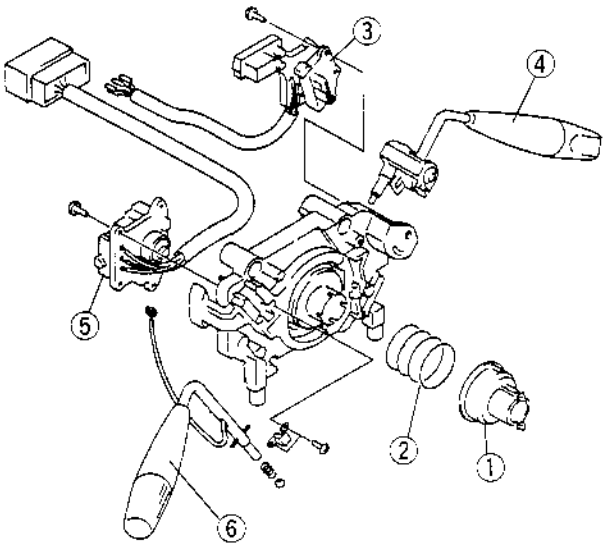

X5U918WAE

1	Cancel cam
2	Spring
3	Wiper unit ☞ Assembly Note
4	Wiper lever
5	Light unit
6	Light lever

Wiper Unit Assembly Note

- Make sure the terminals of the harness assembly are connected to the terminals of the connector as shown in the table.

The color of assembly harness	Terminal of connector
LG	AJ
LG/R	J
G/R	F
Y/R	N
R	E
B	B
G/Y	H
G/W	L
G/B	P

COMBINATION SWITCH INSPECTION

X5U918W13

Headlight Switch

1. Remove the combination switch. (Refer to 09–18 COMBINATION SWITCH REMOVAL/INSTALLATION.)
2. Inspect for continuity between the combination switch terminals by using an ohmmeter.

○—○ : Continuity

Switch position			Terminal					
Light	Dimmer	Flash-to-pass	B	E	N	AJ	J	F
OFF	—	Off						
		On	○		○			○
TNS	—	Off	○			○		
		On	○		○	○		○
Head-light	Low	Off	○	○		○	○	
		On	○		○	○	○	○
	High	—	○		○	○	○	

X5U918WAF

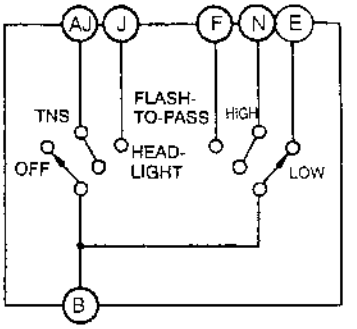

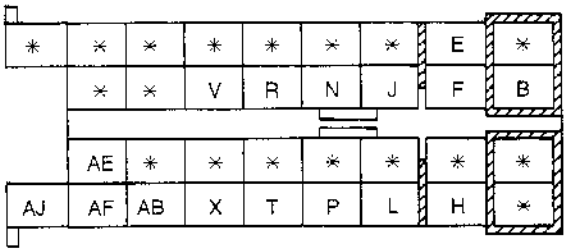

X5U918WAG

3. If not as specified, replace the light unit or light lever.

Turn Switch

1. Remove the combination switch. (Refer to 09–18 COMBINATION SWITCH REMOVAL/INSTALLATION.)
2. Inspect for continuity between the combination switch terminals by using an ohmmeter.

○—○ : Continuity

Switch position	Terminal		
	H	P	L
Right	○		○
Off			
Left	○	○	

X5U918WAH

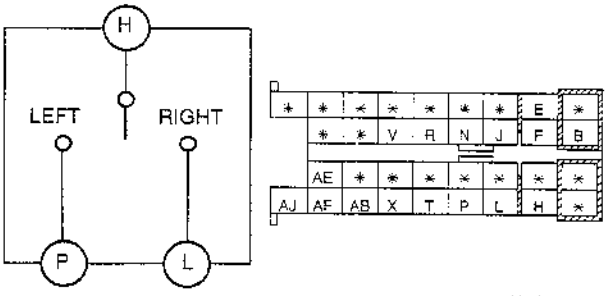

X5U918WAJ

3. If not as specified, replace the light unit or light lever.

Windshield Wiper and Washer Switch

1. Remove the combination switch. (Refer to 09–18 COMBINATION SWITCH REMOVAL/INSTALLATION.)
2. Inspect for continuity between the combination switch terminals by using an ohmmeter.

○—○ : Continuity

Switch position		One-touch	Terminal				
			R	AF	T	AB	X
Wiper switch	OFF	OFF		○		○	
		ON			○	○	
	INT			○		○	
	1				○	○	
	2				○		○
Washer switch	ON		○		○		

X5U918WBB

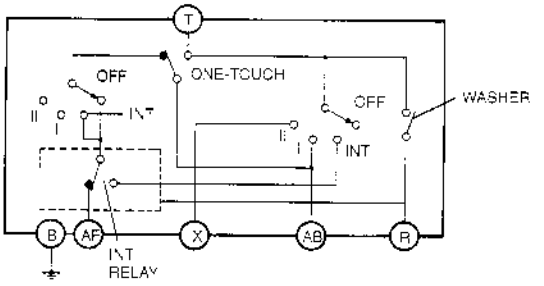

X5U918WBC

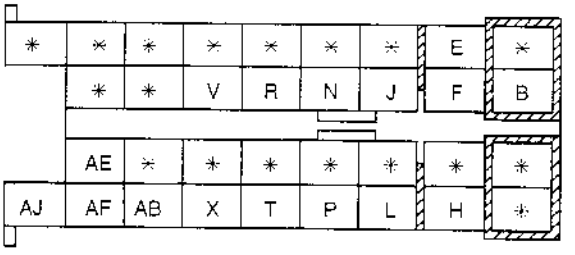

X5U918WBD

3. If not as specified, replace the wiper unit or the wiper lever.

HAZARD WARNING SWITCH REMOVAL/INSTALLATION

X5U918W14

1. Disconnect the negative battery cable.
2. Remove the audio unit. (Refer to 09–20 AUDIO UNIT REMOVAL.) (Refer to 09–20 AUDIO UNIT INSTALLATION.)
3. Remove in the order indicated in the table.
4. Install in the reverse order of removal.

1	Hazard warning switch ☞ Removal Note
2	Hazard warning switch connector

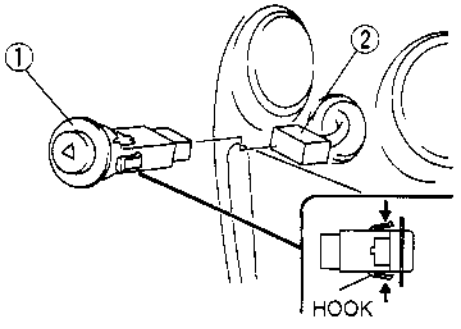

X5U918WAK

Hazard Warning Switch Removal Note

1. Insert your hand into the center panel opening and press the hooks of the hazard warning switch.
2. Pull the hazard warning switch out from the center panel.

HAZARD WARNING SWITCH INSPECTION

X5U918W15

1. Remove the hazard warning switch. (Refer to 09–18 HAZARD WARNING SWITCH REMOVAL/INSTALLATION.)
2. Inspect for continuity between the hazard warning switch terminals by using an ohmmeter.

○—○ : Continuity ○—Ⓑ—○ : Bulb

Switch position	Terminal								
	H	J	L	A	C	I	K	B	D
Off	○	——	○					○—Ⓑ	—○
On		○	—○	○	—○	—○	—○	○—Ⓑ	—○

X5U918WAL

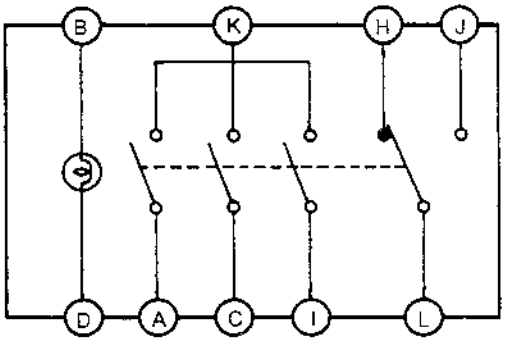

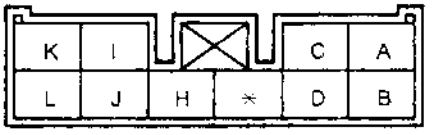

X5U918WAM

3. If not as specified, replace the hazard warning switch.

HEADLIGHT RELAY REMOVAL/INSTALLATION

X5U918W18

1. Disconnect the negative battery cable.
2. Remove in the order indicated in the table.
3. Install in the reverse order of removal.

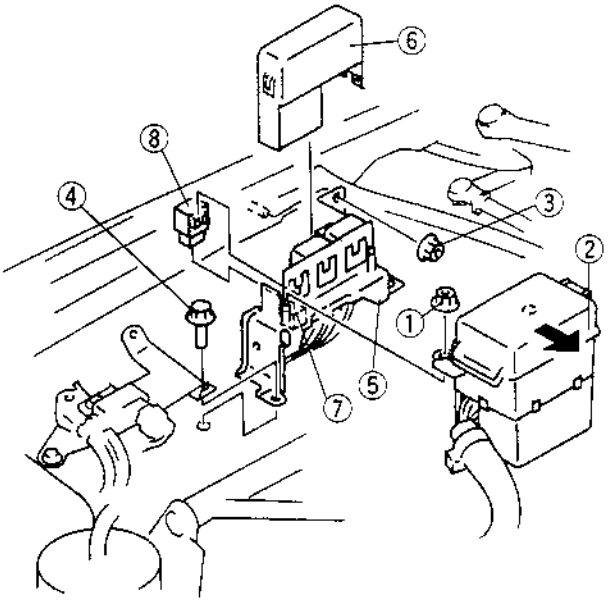

X5U918WAQ

1	Nut
2	Main fuse block
3	Nut
4	Bolt
5	Bracket
6	Cover
7	Headlight relay connector
8	Headlight relay

HEADLIGHT RELAY INSPECTION

X5U918W19

1. Remove the headlight relay.
2. Inspect for continuity between the headlight relay terminals by using an ohmmeter.

O—O : Continuity

Step	Terminal			
	A	B	C	D
1	O—O			
2	B+	GND	O—O	

X5U918WAR

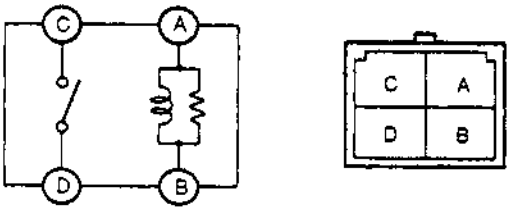

X5U918WAS

3. If not as specified, replace the headlight relay.

TNS RELAY REMOVAL/INSTALLATION

X5U918W20

1. Disconnect the negative battery cable.
2. Remove in the order indicated in the table.
3. Install in the reverse order of removal.

1	Nut
2	Main fuse block
3	Nut
4	Bolt
5	Bracket
6	Cover
7	TNS relay connector
8	TNS relay

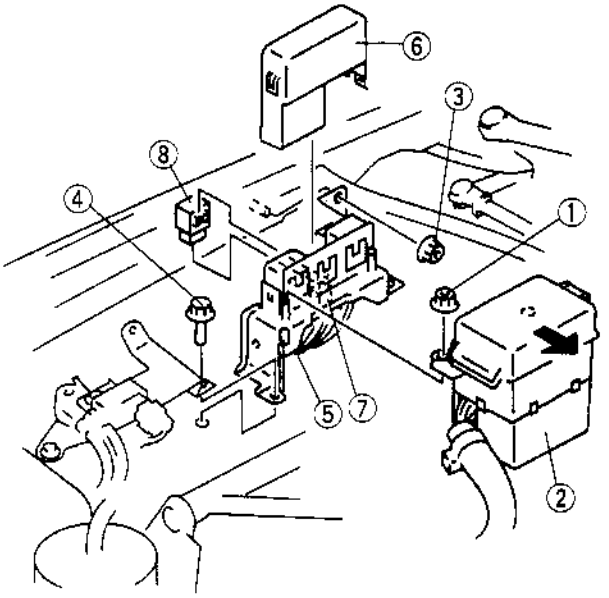

X5U918WAT

TNS RELAY INSPECTION

X5U918W21

1. Remove the TNS relay.
2. Inspect for continuity between the TNS relay terminals by using an ohmmeter.

O—O : Continuity

Step	Terminal			
	A	B	C	D
1	O—O			
2	B+	GND	O—O	

X5U918WAR

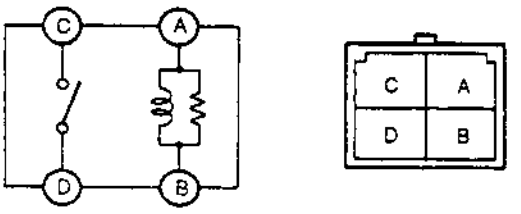

X5U918WAS

3. If not as specified, replace the TNS relay.

FLASHER CONTROL MODULE REMOVAL/INSTALLATION

X5U918W22

1. Disconnect the negative battery cable.
2. Remove the lower panel.
3. Remove in the order indicated in the table.
4. Install in the reverse order of removal.

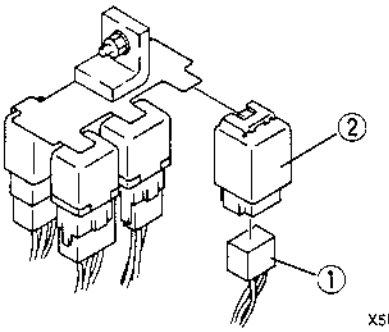

X5U918WAW

1	Flasher control module connector
2	Flasher control module

FLASHER CONTROL MODULE INSPECTION

X5U918W23

1. Measure the voltage at the flasher control module terminals as indicated below.
2. Disconnect the flasher control module connector before inspecting for continuity at terminal B.
3. If not as specified, inspect the parts listed under "Inspection area" and the related wiring harnesses.
4. If the parts and wiring harnesses are okay but the system still does not work properly, replace the flasher control module.

Terminal Voltage List (Reference)

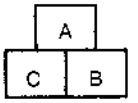

X5U918WAX

Terminal	Signal	Connection	Test condition		Voltage (V)/ Continuity	Inspection area
A	Flasher control module output	Hazard warning switch	Hazard warning switch on		Alternates B+ and 0	• Hazard warning switch • Turn signal light
			Hazard warning switch off	Ignition switch at ON	B+	
				Ignition switch at LOCK or ACC	0	
B	Flasher control module ground	GND	Constant: inspect for continuity to ground		Yes	GND
C	Power supply	Hazard warning switch	Hazard warning switch on		B+	• HAZARD 10 A fuse • TURN 10 A fuse • Hazard warning switch
			Hazard warning switch off	Ignition switch at ON	B+	
				Ignition switch at LOCK or ACC	0	

DRL CONTROL MODULE REMOVAL/INSTALLATION

X5U918W24

1. Disconnect the negative battery cable.
2. Remove the lower panel.
3. Remove in the order indicated in the table.
4. Install in the reverse order of removal.

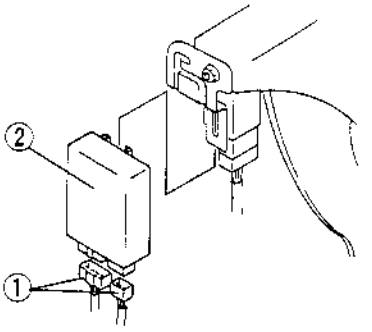

X5U918WAY

1	DRL control module connector
2	DRL control module

DRL CONTROL MODULE INSPECTION

X5U918W25

1. Measure the voltage at the DRL control module terminals as indicated below.
2. Disconnect the DRL control module connector before inspecting for continuity at terminal 1E.
3. If not as specified, inspect the parts listed under "Inspection area" and the related wiring harnesses.
4. If the parts and wiring harnesses are okay but the system still does not work properly, replace the DRL control module.

Terminal Voltage List (Reference)

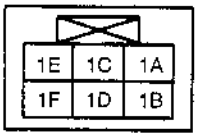

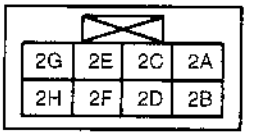

X5U918WAZ

Terminal	Signal	Connection	Test condition		Voltage (V)/ Continuity	Inspection area
1A	RH headlight operation (low beam)	RH headlight (low beam)	Headlight switch at 2nd position	Dimmer switch at high beam position	B+	• H/L-R 15 A fuse • RH headlight
				Dimmer switch at low beam position	0	
			Headlight switch at OFF or 1st position		0	
1B	IG1	ENGINE 15 A fuse	Ignition switch at ON		B+	ENGINE 15 A fuse
			Ignition switch at LOCK or ACC		0	
1C	LH headlight operation (low beam)	LH headlight (low beam)	Headlight switch at 2nd position	Dimmer switch at high beam position	B+	• H/L-L 15 A fuse • LH headlight
				Dimmer switch at low beam position	0	
			Headlight switch at OFF or 1st position		0	
1D	Power supply	HEAD 40 A fuse	Constant		B+	HEAD 40 A fuse
1E	DRL control module ground	GND	Constant: inspect for continuity to ground		Yes	GND
1F	Headlight operation (high beam)	Headlight (high beam)	Headlight switch at 2nd position	Dimmer switch at high beam position	0	Headlight
				Dimmer switch at low beam position	B+	
			Headlight switch at OFF or 1st position		0	

Terminal	Signal	Connection	Test condition		Voltage (V)/ Continuity	Inspection area
2A	Headlight relay operation	Headlight relay	Headlight switch at 2nd position		0	• HEAD 40 A fuse • Headlight relay
			Headlight switch at OFF or 1st position		B+	
2B	Flash-to-pass	Headlight switch	Flash-to-pass activated		0	Combination switch
			Flash-to-pass not activated		B+	
2C	—	Not used	—		—	—
2D	Brake system warning light operation	• Brake system warning light • Brake fluid level sensor	Ignition switch at ON	Brake fluid level is below MIN.	0	• METER 15 A fuse • Instrument cluster • Brake fluid level sensor
				Brake fluid level is above MIN.	B+	
			Ignition switch at LOCK or ACC		0	
2E	—	Not used	—		—	—
2F	Parking brake lever pulled/released	Parking brake switch	Parking brake lever pulled		0	Parking brake switch
			Parking brake lever released		B+	
2G	High beam on/off	Headlight switch	Dimmer switch at high position		0	Combination switch
			Dimmer switch at low position		B+	
2H	Headlight switch on/off	Headlight switch	Headlight switch at 2nd position		0	Combination switch
			Headlight switch at OFF or 1st position		B+	

INTERIOR LIGHT REMOVAL/INSTALLATION

1. Disconnect the negative battery cable.
2. Remove in the order indicated in the table.
3. Install in the reverse order of removal.

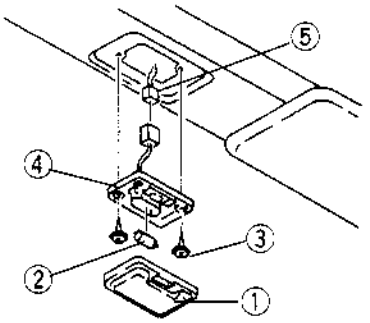

X5U918WB0

1	Lens ☞ Removal Note
2	Interior light bulb
3	Screw
4	Interior light
5	Interior light connector

X5U916W26

Lens Removal Note

1. Insert a tape-wrapped flathead screwdriver into the lens.
2. Twist the screwdriver to remove the lens.

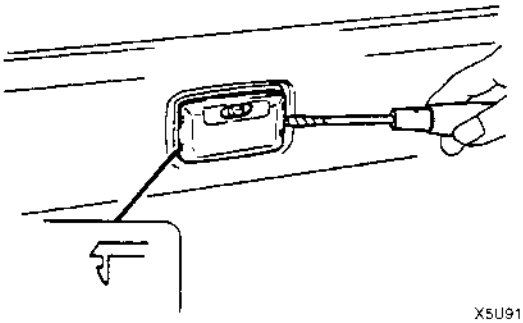

X5U918WB1

INTERIOR LIGHT INSPECTION

1. Remove the interior light. (Refer to 09–18 INTERIOR LIGHT REMOVAL/INSTALLATION.)
2. Inspect for continuity between the interior light terminals by using an ohmmeter.

○—Ⓑ—○ : Bulb

Switch position	Terminal		
	A	B	Body GND
ON		○—Ⓑ—○	
DOOR	○—Ⓑ—○		
OFF			

X5U918WB2

X5U918W27

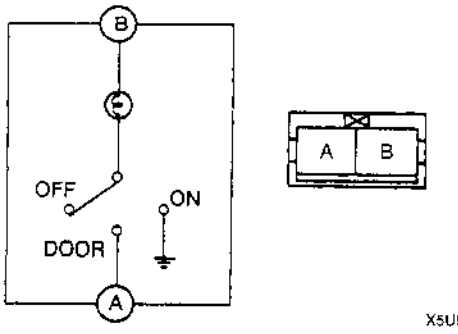

X5U918WAU

3. If not as specified, replace the interior light.

DOOR SWITCH REMOVAL/INSTALLATION

1. Disconnect the negative battery cable.
2. Remove in the order indicated in the table.
3. Install in the reverse order of removal.

X5U918W28

1	Screw
2	Door switch
3	Door switch connector

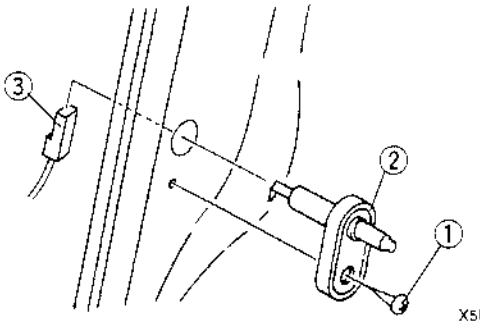

X5U918WB3

DOOR SWITCH INSPECTION

1. Remove the door switch.
2. Inspect for continuity between the door switch terminals by using an ohmmeter.

○—○ : Continuity

Switch condition	Terminal	
	A	Body GND
Pressed		
Released	○———○	

X5U918WB4

X5U918W29

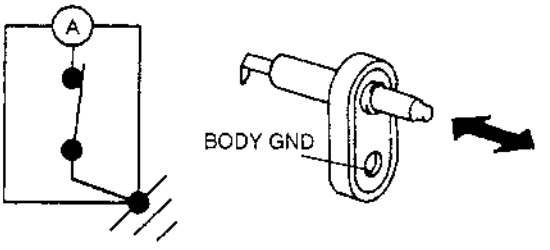

X5U918WB5

3. If not as specified, replace the door switch.

PANEL LIGHT CONTROL SWITCH REMOVAL/INSTALLATION

X5U9*8W30

1. Disconnect the negative battery cable.
2. Remove the lower panel.
3. Remove in the order indicated in the table.
4. Install in the reverse order of removal.

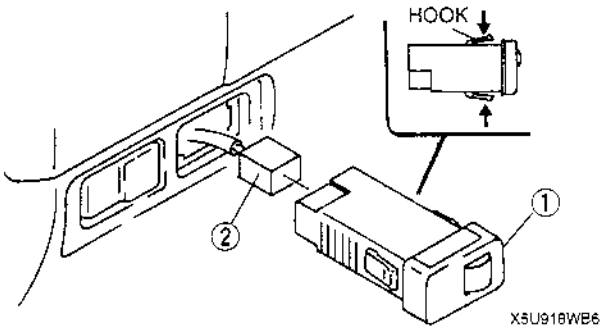

1	Panel light control switch ☞ Removal Note
2	Panel light control switch connector

Panel Light Control Switch Removal Note

1. Insert your hand inside the dashboard and press the hooks of the panel light control switch.
2. Pull the panel light control switch out from the dashboard.

PANEL LIGHT CONTROL SWITCH INSPECTION

X5U9*8W31

1. Remove the panel light control switch without disconnecting the connector. (Refer to 08–18 PANEL LIGHT CONTROL SWITCH REMOVAL/INSTALLATION.)
2. Measure the voltage at the panel light control switch terminals as indicated below.
3. Disconnect the panel light control switch connector before inspecting for continuity at terminal G.
4. If not as specified, inspect the parts listed under "Inspection area" and the related wiring harnesses.
5. If the parts and wiring harnesses are okay but the system still does not work properly, replace the panel light control switch.

Terminal Voltage List (Reference)

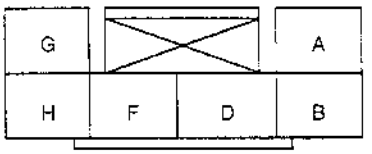

X5U918WB7

Terminal	Signal	Connection	Test condition	Voltage (V)/ Continuity	Inspection area
A	Panel light control output	Each illumination	Inspect by using an oscilloscope ☞ A terminal inspection	—	Each illumination
B	—	Not used	—	—	—
D	Power supply	TNS relay	Headlight switch at 1st or 2nd position	B+	• Combination switch • TAIL 15 A fuse
			Headlight switch at OFF	0	
F	—	Not used	—	—	—
G	Panel light control switch ground	GND	Constant: inspect for continuity to ground	Yes	GND
H	—	Not used	—	—	—

A terminal inspection

1. Measure the wave pattern of the A terminal on the panel light control switch by using an oscilloscope.

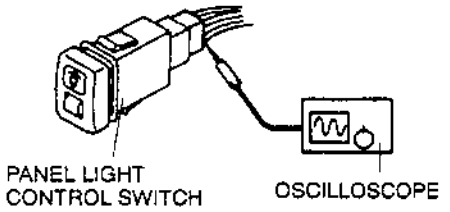

X5U918WB8

2. Set the headlight switch to either the first or second position.
3. Set the panel light control switch to the brightest position.
4. Verify that the pattern on the screen is as shown in the figure.

X5U918WB9

5. Verify that the pattern on the screen matches the pattern shown in the figure as the panel light control switch is gradually turned to the darkest position.

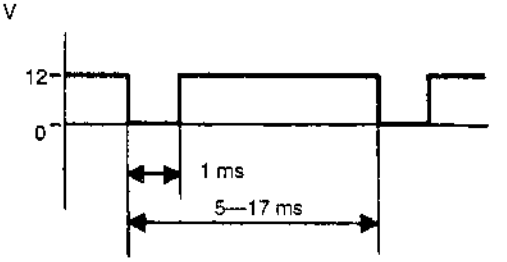

X5U918WBA

09–19 WIPER AND WASHER

WINDSHIELD WIPER ARM AND BLADE ADJUSTMENT

X5U919W04

1. Operate the windshield wiper motor to set the windshield wipers in the park position.
2. Set the windshield wiper arm height as shown.

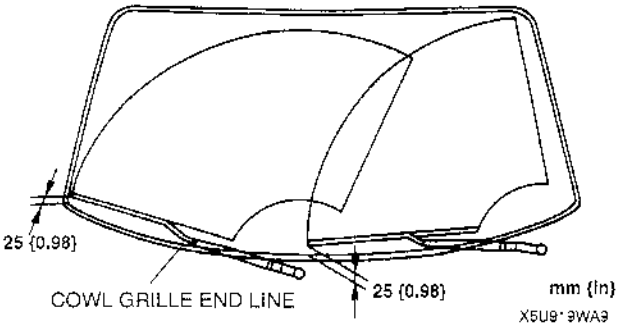

WINDSHIELD WIPER ARM AND BLADE REMOVAL/INSTALLATION

X5U919W03

1. Remove in the order indicated in the table.
2. Install in the reverse order of removal.
3. Adjust the windshield wiper arm and blade. (Refer to 09–19 WINDSHIELD WIPER ARM AND BLADE ADJUSTMENT.)

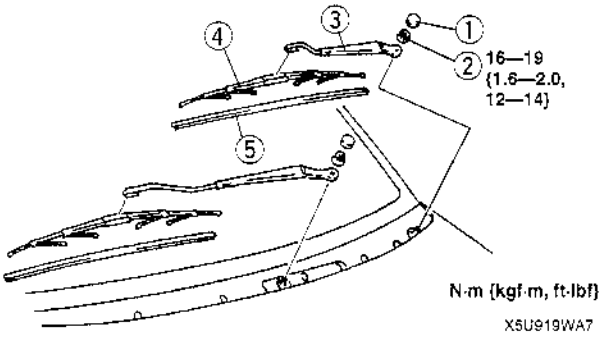

1	Cap
2	Nut
3	Windshield wiper arm ☞ Installation Note
4	Windshield wiper blade
5	Rubber brush

Windshield Wiper Arm Installation Note

- Clean the windshield wiper arm connector shafts by using a wire brush before installing the windshield wiper arms.

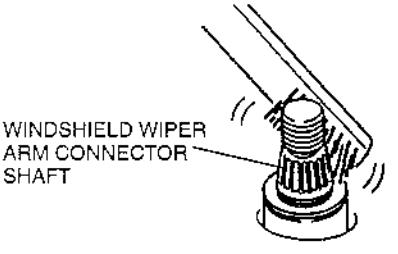

X5U919WA8

WINDSHIELD WIPER LINK REMOVAL/INSTALLATION

X5U919W05

1. Remove the windshield wiper arm and blade. (Refer to 09–19 WINDSHIELD WIPER ARM AND BLADE REMOVAL/INSTALLATION, Windshield Wiper Arm Installation Note.)
2. Remove the cowl grille.
3. Pry off the connection between the windshield wiper motor and the windshield wiper link.
4. Remove in the order indicated in the table.
5. Install in the reverse order of removal.
6. Adjust the windshield wiper arm and blade. (Refer to 09–19 WINDSHIELD WIPER ARM AND BLADE ADJUSTMENT.)

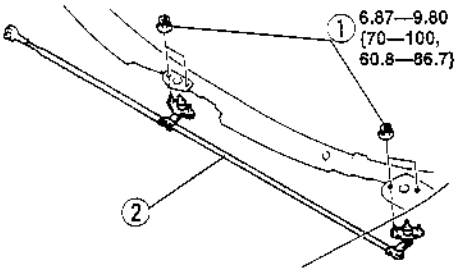

N·m {kgf·cm, in·lbf}

X5U919WAA

1	Nut
2	Windshield wiper link

WINDSHIELD WIPER MOTOR REMOVAL/INSTALLATION

X5U919W01

1. Disconnect the negative battery cable.
2. Pry off the connection between the windshield wiper motor and windshield wiper link.
3. Remove in the order indicated in the table.
4. Install in the reverse order of removal.

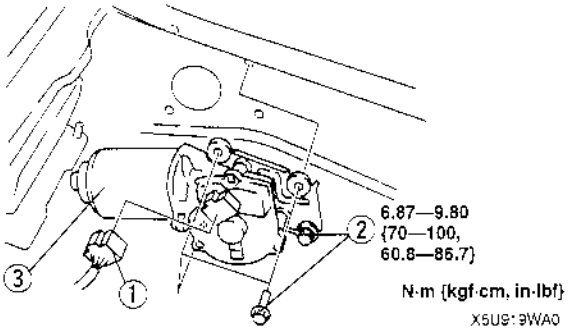

N·m {kgf·cm, in·lbf}

X5U919WA0

1	Windshield wiper motor connector
2	Bolt
3	Windshield wiper motor ☞ Removal Note

Windshield Wiper Motor Removal Note

- Rotate the windshield wiper motor counterclockwise and then remove it.

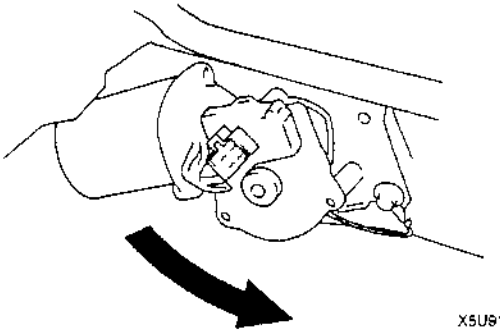

X5U919WA5

WINDSHIELD WIPER MOTOR INSPECTION

X5U919W02

1. Disconnect the windshield wiper motor connector.
2. Apply battery positive voltage and inspect the operation of the windshield wiper motor as indicated below.

Terminal	Operation
A	High
C	Low

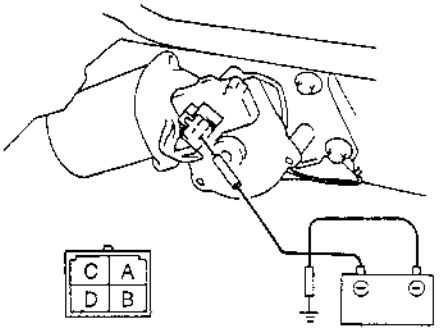

X5U919WA6

3. Connect the windshield wiper motor connector.

4. Turn the ignition switch to ON and turn the windshield wiper switch on.
5. Turn the ignition switch to LOCK while the windshield wipers are operating.
6. Verify that the windshield wipers do not stop in the park position.
7. Disconnect the windshield wiper motor connector.
8. Inspect for continuity between the windshield wiper motor terminals by using an ohmmeter.

○—○ : Continuity

Windshield wiper motor position	Terminal				
	C	A	B	D	Body GND
Except park position	○	○	○	○	○

X5U919WA1

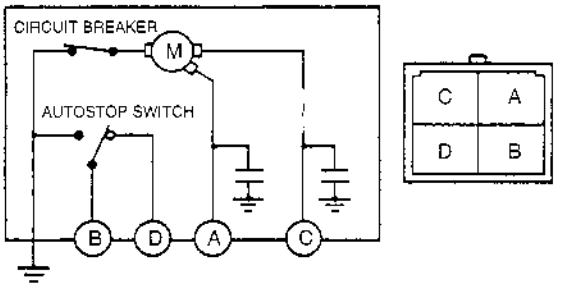

X5U919WA2

9. Connect the windshield wiper motor connector.
10. Turn the ignition switch to ON and turn the windshield wiper switch on.
11. Turn the windshield wiper switch off while the windshield wipers are operating.
12. Verify that the windshield wipers stop in the park position.
13. Disconnect the windshield wiper motor connector.
14. Inspect for continuity between the windshield wiper motor terminals by using an ohmmeter.

○—○ : Continuity

Windshield wiper motor position	Terminal			
	A	B	C	Body GND
Park position	○	○	○	○

X5U919WA3

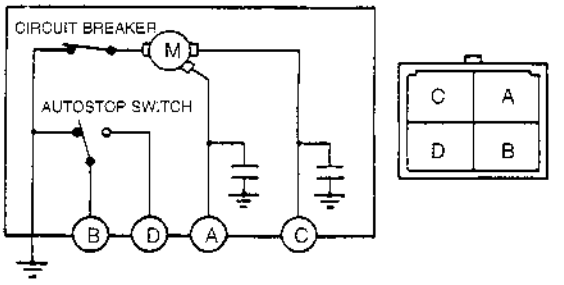

X5U919WA4

15. If not as specified, replace the windshield wiper motor.

WINDSHIELD WASHER TANK REMOVAL/INSTALLATION

1. Disconnect the negative battery cable.
2. Remove in the order indicated in the table.
3. Install in the reverse order of removal.

EXCEPT CANADA: WITH ABS

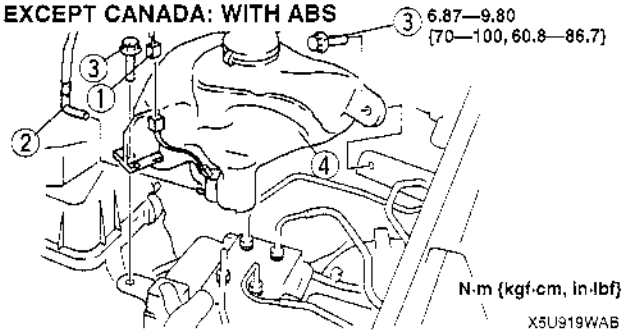

X5U919WAB

EXCEPT CANADA: WITHOUT ABS

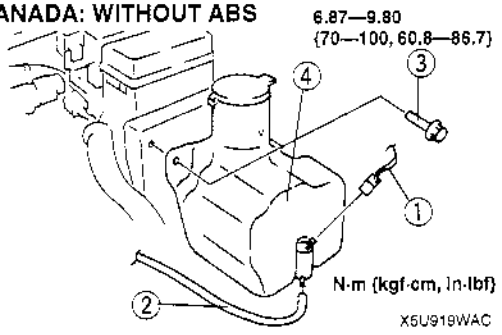

X5U919WAC

X5U919W06

CANADA

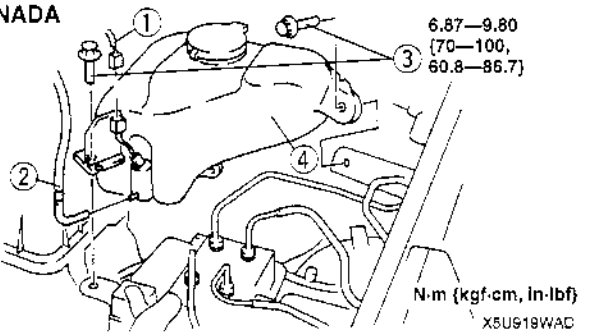

X5U919WAC

1	Windshield washer motor connector
2	Windshield washer pipe
3	Bolt
4	Windshield washer tank

WINDSHIELD WASHER MOTOR REMOVAL/INSTALLATION

1. Disconnect the negative battery cable.
2. Remove the windshield washer tank.
3. Remove in the order indicated in the table.
4. Install in the reverse order of removal.

EXCEPT CANADA: WITH ABS
CANADA

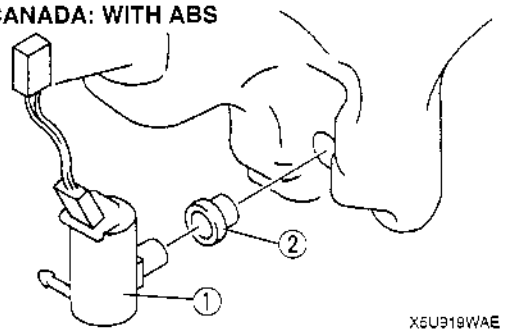

X5U919WAE

X5U919W07

EXCEPT CANADA: WITHOUT ABS

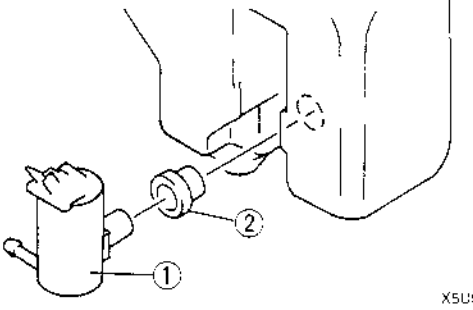

X5U919WAL

1	Windshield washer motor
2	Grommet

WINDSHIELD WASHER MOTOR INSPECTION

1. Disconnect the windshield washer motor connector.
2. Connect battery positive voltage to the terminal B and ground to the terminal A of the motor.
3. Verify that the windshield washer motor operates.

EXCEPT CANADA: WITH ABS
CANADA

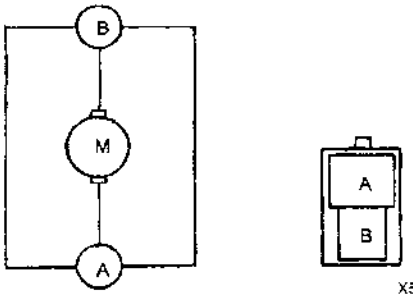

X5U919WAF

X5U919W08

EXCEPT CANADA: WITHOUT ABS

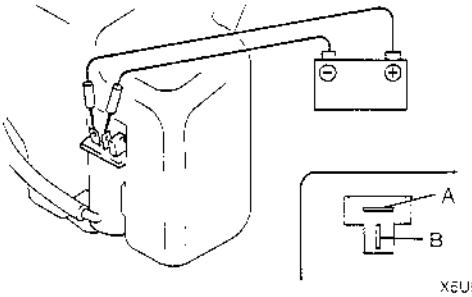

X5U919WAM

4. If the motor does not operate, replace the windshield washer motor.

WINDSHIELD WASHER NOZZLE ADJUSTMENT

X5U919W11

- Insert a needle or equivalent tool into the spray holes of the windshield washer nozzle and adjust the nozzle direction as shown.

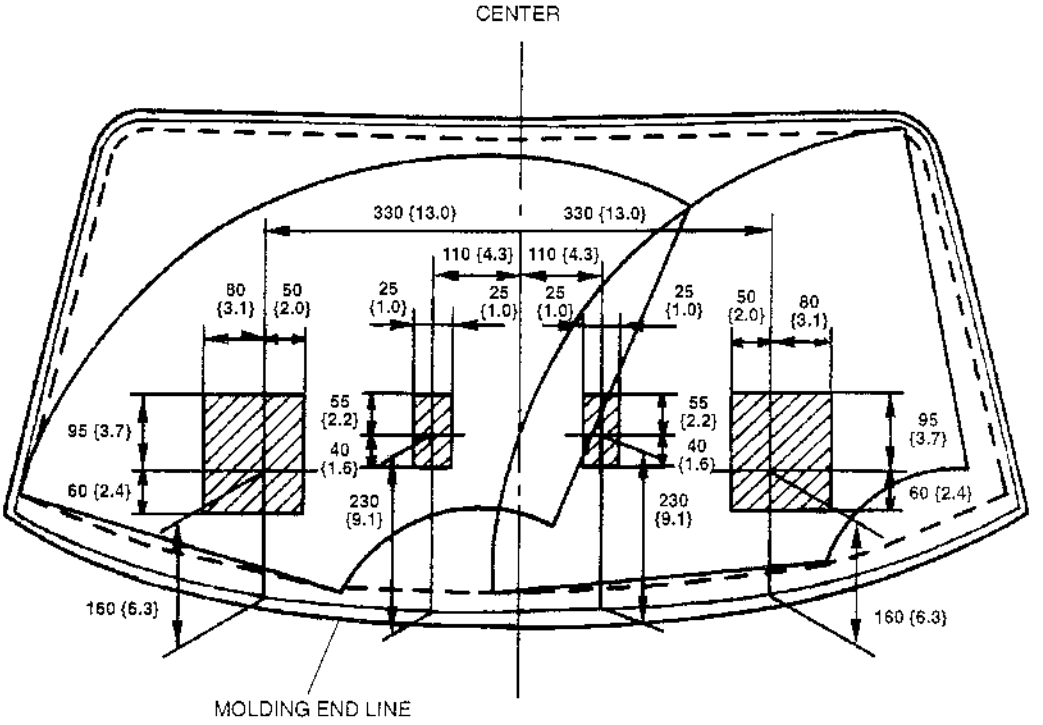

X5U919WAH

WINDSHIELD WASHER NOZZLE REMOVAL

X5U919W09

1. Disconnect the windshield washer pipe from the windshield washer nozzle.
2. Remove the windshield washer nozzle by squeezing the tabs.

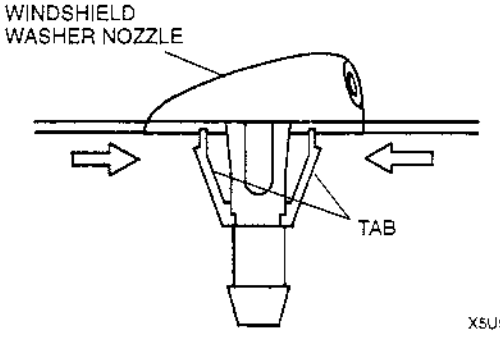

X5U919WAG

WINDSHIELD WASHER NOZZLE INSTALLATION

X5U919W10

1. Connect the windshield washer pipe to the windshield washer nozzle.
2. Push the windshield washer nozzle into the installation hole.
3. Adjust the windshield washer nozzle. (Refer to 09–19 WINDSHIELD WASHER NOZZLE ADJUSTMENT.)

WINDSHIELD WASHER PIPE REMOVAL/INSTALLATION

X5U919W*2

1. Remove in the order indicated in the table.
2. Install in the reverse order of removal.

EXCEPT CANADA: WITH ABS CANADA

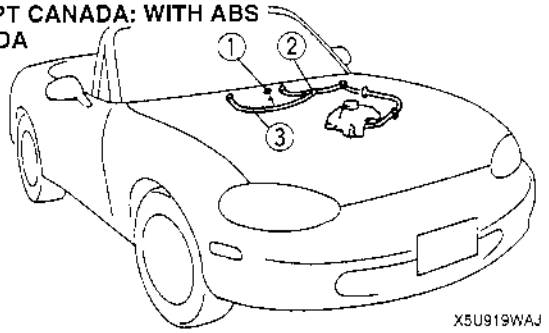

X5U919WAJ

EXCEPT CANADA: WITHOUT ABS

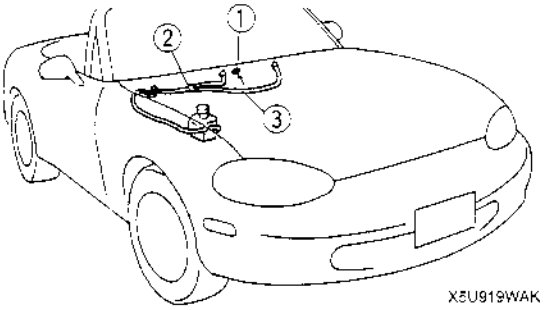

X5U919WAK

1	Clip
2	Joint pipe
3	Windshield washer pipe

09–20 ENTERTAINMENT

DOOR SPEAKER REMOVAL/INSTALLATION

X5U920W01

Caution

- **When removing or installing a door speaker, touching the radio cone paper could cause poor sound quality. When removing or installing a door speaker, hold the speaker's bracket and handle with care.**

1. Disconnect the negative battery cable.
2. Remove the door trim. (Refer to 09–17 DOOR TRIM REMOVAL/INSTALLATION.)
3. Remove the screws.
4. Disconnect the door speaker connector and remove the door speaker.

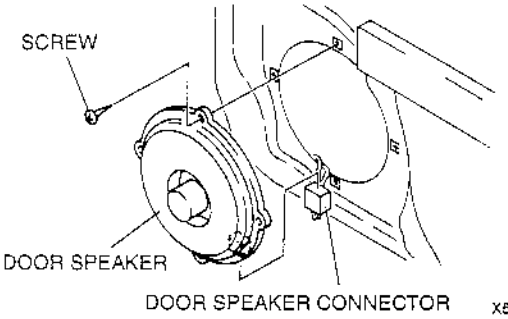

X5U920WA0

5. Position the door speaker so that the terminals face downward and install in the reverse order of removal.

DOOR SPEAKER INSPECTION

X5U920W02

1. Remove the door speaker. (Refer to 09–20 DOOR SPEAKER REMOVAL/INSTALLATION.)
2. Inspect for resistance between the door speaker terminals by using an ohmmeter.

○⁄⁄⁄○ : Resistance

Door speaker	Terminal	
	A	B
Standard type	○———⁄⁄⁄———○	R_1
BOSE type	○———⁄⁄⁄———○	R_2

R_1: 4 Ω R_2: 0.5 Ω

X5U920WA1

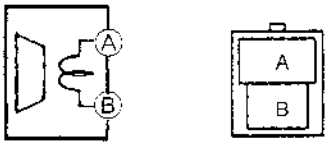

X5U920WA2

3. Touch the leads of an ohmmeter to the door speaker terminals and verify that the speaker clicks.

Range
×1 Ω

4. If not as specified, replace the door speaker.

TWEETER SPEAKER REMOVAL/INSTALLATION

X5U920WC3

Caution

- **When removing or installing a tweeter speaker, touching the radio cone paper could cause poor sound quality. When removing or installing a tweeter speaker, hold the speaker's bracket and handle with care.**

1. Disconnect the negative battery cable.
2. Remove the door trim. (Refer to 09–17 DOOR TRIM REMOVAL/INSTALLATION.)
3. Remove the screws and remove the tweeter speaker.

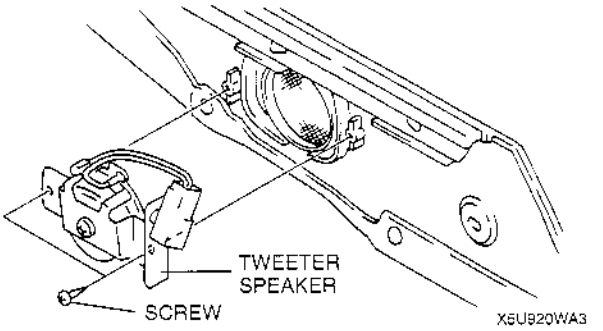

4. Install in the reverse order of removal.

TWEETER SPEAKER INSPECTION

X5U920W04

1. Remove the tweeter speaker. (Refer to 09–20 TWEETER SPEAKER REMOVAL/INSTALLATION.)
2. Inspect for resistance between the tweeter speaker terminals by using an ohmmeter.

O/W/-O : Resistance

Test condition	Terminal	
	A	B
Constant	O——/W/——O	R

R: 4 Ω

X5U920WA4

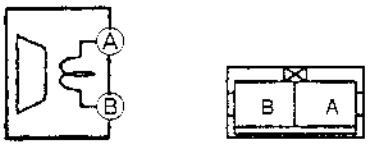

X5U920WA5

3. Touch the leads of an ohmmeter to the tweeter speaker terminals and verify that the speaker clicks.

Range
×1 Ω

4. If not as specified, replace the tweeter speaker.

MANUAL ANTENNA REMOVAL/INSTALLATION

1. Disconnect the negative battery cable.
2. Remove the trunk side trim (LH). (Refer to 09–17 TRUNK SIDE TRIM REMOVAL/INSTALLATION.)
3. Remove in the order indicated in the table.
4. Install in the reverse order of removal.

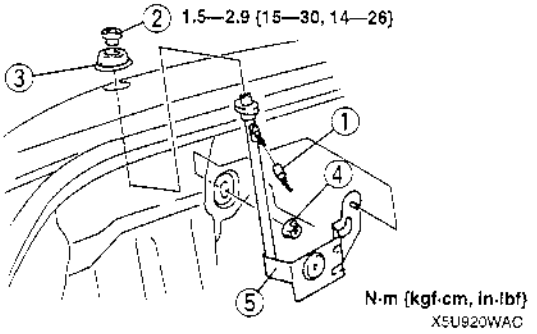

X5U920WAC

1	Rear antenna feeder
2	Mounting nut ☞ Removal Note
3	Spacer
4	Nut
5	Manual antenna

X5U920W09

Mounting Nut Removal Note

- Use a snap-ring pliers to remove the mounting nut.

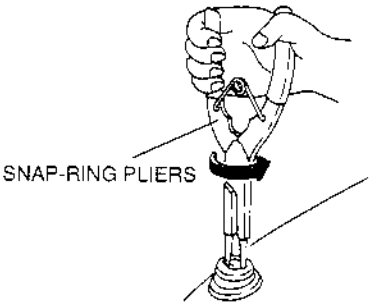

X5U920WAD

MANUAL ANTENNA INSPECTION

1. Remove the trunk side trim (LH). (Refer to 09–17 TRUNK SIDE TRIM REMOVAL/INSTALLATION.)
2. Disconnect the connection between the rear antenna feeder and the manual antenna.
3. Verify that there is no continuity between manual antenna terminals A and B by using an ohmmeter.
4. Inspect for continuity between the manual antenna terminals by using an ohmmeter.

○—○ : Continuity

Step	Terminal			
	A	B	C	D
1	○		○	
2		○		○

X5U920WAE

X5U920W10

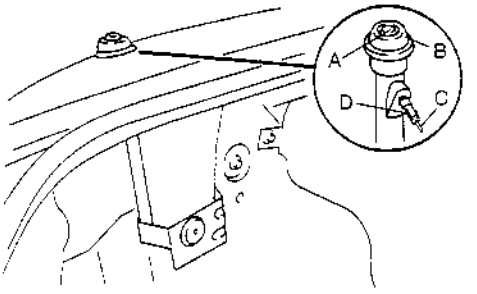

X5U920WAF

5. If not as specified, replace the manual antenna.

POWER ANTENNA REMOVAL/INSTALLATION

X5U920W11

1. Disconnect the negative battery cable.
2. Remove the trunk side trim (LH). (Refer to 09–17 TRUNK SIDE TRIM REMOVAL/INSTALLATION.)
3. Remove in the order indicated in the table.
4. Install in the reverse order of removal.

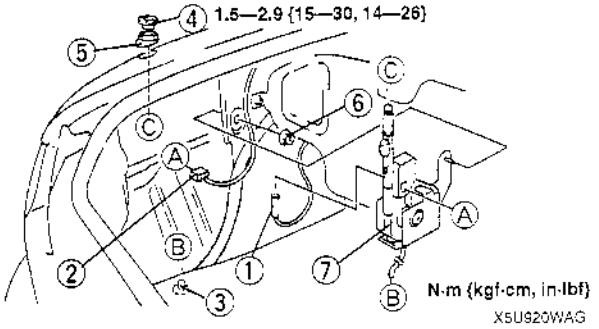

1	Rear antenna feeder
2	Power antenna connector
3	Drain hose
4	Mounting nut ☞ Removal Note
5	Spacer
6	Nut
7	Power antenna

Mounting Nut Removal Note

- Use a snap-ring pliers to remove the mounting nut.

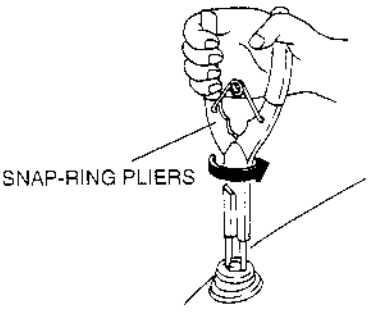

POWER ANTENNA DISASSEMBLY/ASSEMBLY

X5U920W12

1. Disassemble in the order indicated in the table.
2. Assemble in the reverse order of disassembly.

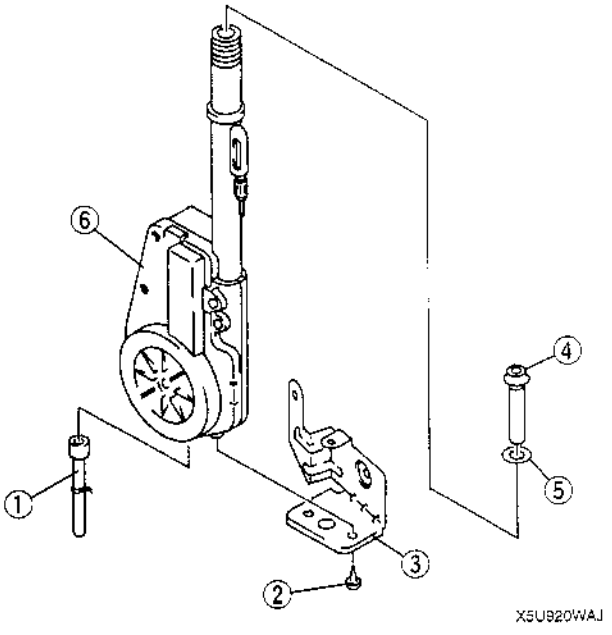

1	Drain hose
2	Screw
3	Bracket
4	Rod insulator
5	O-ring
6	Motor

POWER ANTENNA INSPECTION

X5U920W13

1. Remove the trunk side trim (LH). (Refer to 09–17 TRUNK SIDE TRIM REMOVAL/INSTALLATION.)
2. Disconnect the power antenna connector.
3. Connect ground to terminal H of the power antenna.
4. Connect battery positive voltage to the following terminals of the power antenna. Verify that the power antenna operated as indicated below.

Terminal		Power antenna operation
B	D	
B+	—	Down
B+	B+	Up

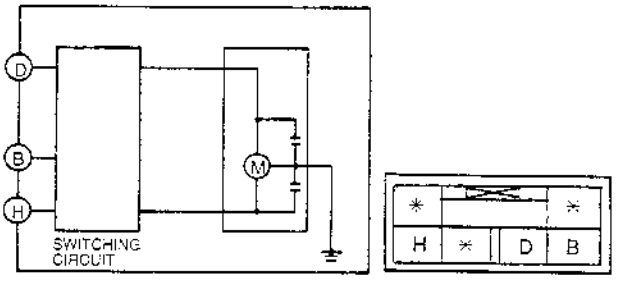

X5U920WAK

5. If not as specified, replace the necessary part.

ANTENNA MAST REMOVAL

X5U920W14

Caution

- **Always remove the antenna mast with the power antenna installed in the vehicle. Removing the antenna mast from the removed power antenna may damage the power antenna or the antenna mast.**

1. Use a snap-ring pliers to remove the mounting nut.

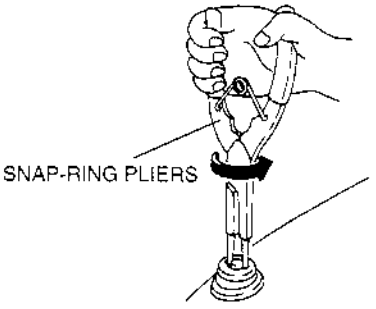

X5U920WAL

2. Turn the ignition switch to ON or ACC.
3. Audio power switch is ON.
4. To turn on the radio, press AM/FM button.
5. Pull out the antenna mast after it fully extends.

ANTENNA MAST INSTALLATION

X5U920W15

1. Turn the ignition switch to ON or ACC.
2. Straighten the warp of rack end.
3. Audio power switch is ON.
4. To turn on the radio, press AM/FM button.
5. To turn off the radio, audio power switch is off, then immediately insert the rack into the power antenna.

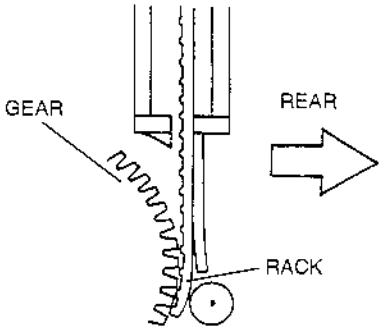

X5U920WAM

6. After the antenna mast is fully retracted, tighten the mounting nut to the specification.

   Tightening torque
   1.5—2.9 N·m {15—30 kgf·cm, 14—26 in·lbf}

7. Verify that the power antenna operates smoothly when the audio unit radio on.

FRONT ANTENNA FEEDER REMOVAL/INSTALLATION

X5U920W06

1. Disconnect the negative battery cable.
2. Remove the audio unit. (Refer to 09–20 AUDIO UNIT REMOVAL.) (Refer to 09–20 AUDIO UNIT INSTALLATION.)
3. Remove the console. (Refer to 09–17 CONSOLE REMOVAL/INSTALLATION.)
4. Disconnect the connection between the front antenna feeder and the rear antenna feeder.
5. Remove in the order indicated in the table.
6. Install in the reverse order of removal.

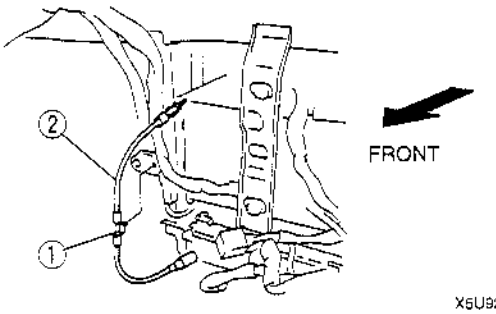

X5U920WA8

1	Clip
2	Front antenna feeder

FRONT ANTENNA FEEDER INSPECTION

X5U920W05

1. Disconnect the negative battery cable.
2. Remove the audio unit. (Refer to 09–20 AUDIO UNIT REMOVAL.)
3. Remove the console. (Refer to 09–17 CONSOLE REMOVAL/INSTALLATION.)
4. Disconnect the connection between front antenna feeder and the rear antenna feeder.
5. Verify that there is no continuity between front antenna feeder terminals A and B by using an ohmmeter.
6. Inspect for continuity between the front antenna feeder terminals by using an ohmmeter.

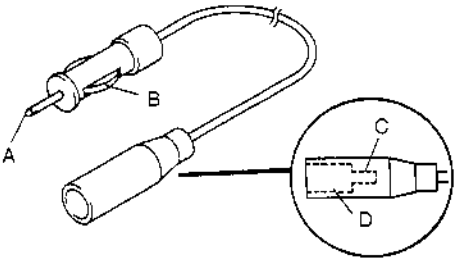

X5U920WA7

7. If not as specified, replace the front antenna feeder.

○—○ : Continuity

Step	Terminal			
	A	B	C	D
1	○		○	
2		○		○

X5U920WA6

REAR ANTENNA FEEDER REMOVAL/INSTALLATION

X5U920W07

1. Disconnect the negative battery cable.
2. Remove the trunk side trim (LH). (Refer to 09–17 TRUNK SIDE TRIM REMOVAL/INSTALLATION.)
3. Disconnect the connection between the rear antenna feeder and the power antenna. (With manual antenna: manual antenna)
4. Remove the rear package trim. (Refer to 09–17 REAR PACKAGE TRIM REMOVAL/INSTALLATION.)
5. Turn over the floor covering from the right side. (Refer to 09–17 FLOOR COVERING REMOVAL/INSTALLATION.)
6. Disconnect the connection between the front antenna feeder and the rear antenna feeder.
7. Remove in the order indicated in the table.
8. Install in the reverse order of removal.

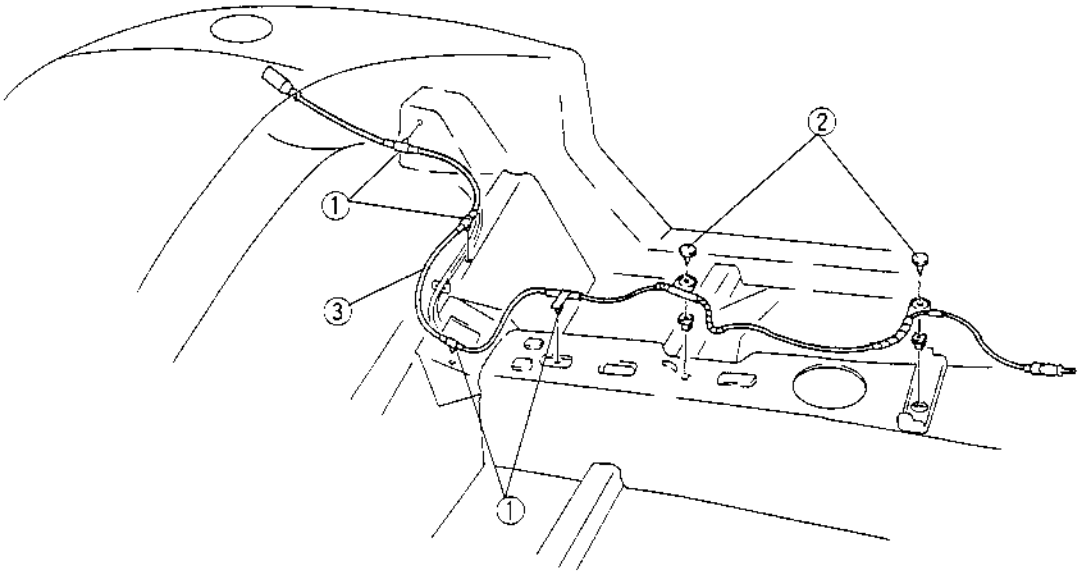

X5U920WA9

1	Clip
2	Fastener
3	Rear antenna feeder

REAR ANTENNA FEEDER INSPECTION

X5U920W08

1. Remove the console. (Refer to 09–17 CONSOLE REMOVAL/INSTALLATION.)
2. Disconnect the connection between the front antenna feeder and the rear antenna feeder.
3. Remove the trunk side trim (LH). (Refer to 09–17 TRUNK SIDE TRIM REMOVAL/INSTALLATION.)
4. Disconnect the connection between the rear antenna feeder and the power antenna. (With manual antenna: manual antenna)
5. Verify that there is no continuity between rear antenna feeder terminals A and B by using an ohmmeter.
6. Inspect for continuity between the rear antenna feeder terminals by using an ohmmeter.

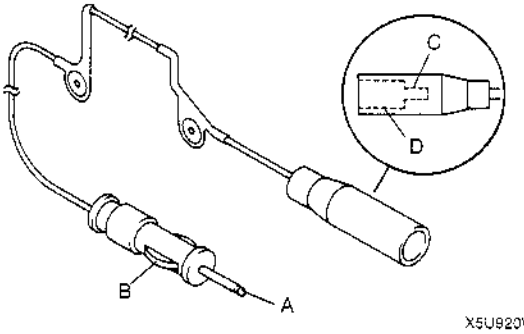

X5U920WAB

7. If not as specified, replace the rear antenna feeder.

○—○ : Continuity

Step	Terminal			
	A	B	C	D
1	○		○	
2		○		○

X5U920WAA

AUDIO UNIT REMOVAL

X5U920W17

1. Disconnect the negative battery cable.
2. Remove the service hole covers by inserting a small tape-wrapped flathead screwdriver into the slot and carefully pry them off without scratching the center panel. Pry up and pull off the service hole covers carefully to prevent the posts from breaking off.

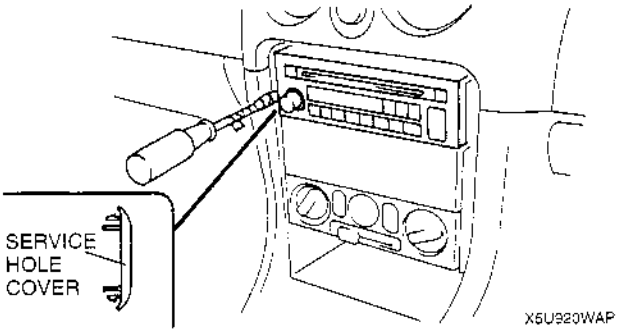

3. With the beveled parts of the **SST** (Removing tool) facing inward, insert them into the unit.
4. Pull the **SST** (Removing tool) outward and forward to slide out the unit.

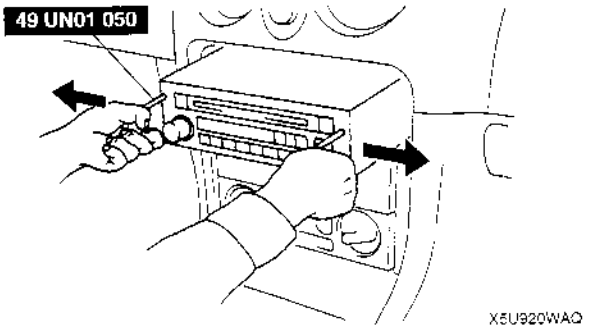

5. Disconnect the connectors and antenna jack.

AUDIO UNIT INSTALLATION

X5U920W18

Caution

- **Make certain that the wiring harness and antenna feeder are not caught between the unit and dashboard. If the harness or the antenna feeder is caught between the unit and dashboard, it may become the cause of trouble or malfunctions.**
- **To install the audio unit, be sure to push the service hole cover areas on both sides of the audio unit. If the switches are pressed instead, it may become the cause of trouble or malfunctions.**

1. Connect the connectors and antenna jack.
2. Insert the unit until each clip clicks.
3. Install the service hole covers.
4. Connect the negative battery cable.

AUDIO AMPLIFIER REMOVAL/INSTALLATION

X5U920W16

1. Disconnect the negative battery cable.
2. Remove the dashboard. (Refer to 09–17 DASHBOARD REMOVAL/INSTALLATION.)
3. Remove in the order indicated in the table.
4. Install in the reverse order of removal.

1	Audio amplifier connector
2	Nut
3	Audio amplifier

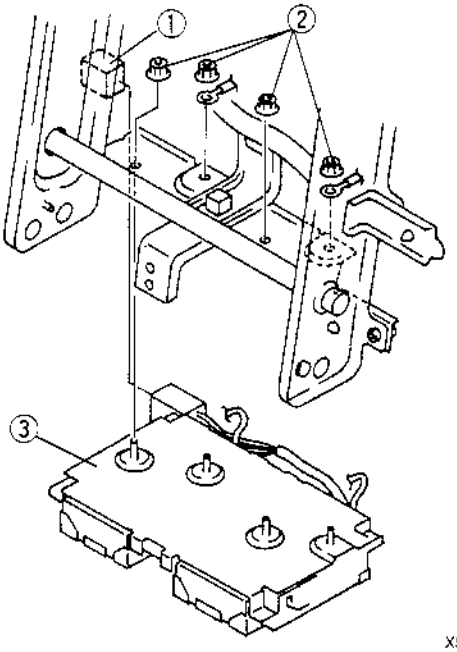

X5U920WAN

AUDIO RELAY REMOVAL/INSTALLATION

X5U920W19

1. Disconnect the negative battery cable.
2. Remove the center lower panel. (Refer to 09–17 CENTER LOWER PANEL REMOVAL/INSTALLATION.)
3. Disconnect the audio relay connector.
4. Remove the audio relay.
5. Install in the reverse order of removal.

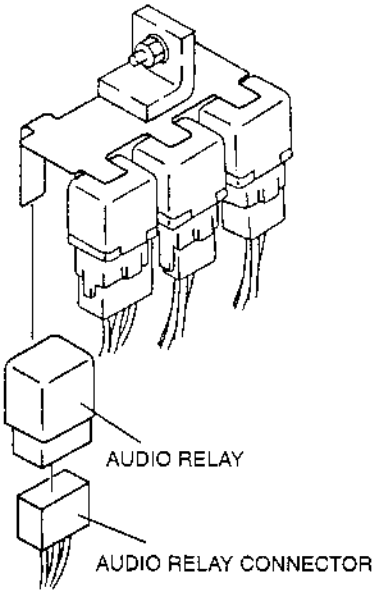

X5U920WAR

AUDIO RELAY INSPECTION

X5U920W20

1. Remove the audio relay. (Refer to 09–20 AUDIO RELAY REMOVAL/INSTALLATION.)
2. Inspect for continuity between the audio relay terminals by using an ohmmeter.

○—○ : Continuity

Step	Terminal			
	A	B	C	D
1	○	○		
2	B+	GND	○	○

X5U920WAS

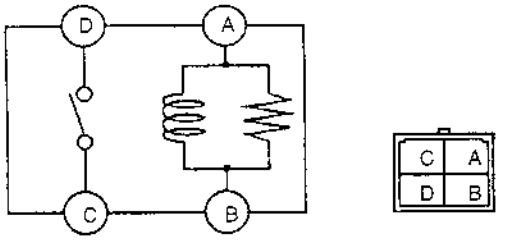

X5U920WAT

3. If not as specified, replace the audio relay.

CIGARETTE LIGHTER REMOVAL/INSTALLATION

X5U920W22

1. Disconnect the negative battery cable.
2. Remove the center panel. (Refer to 09–17 CENTER PANEL REMOVAL/INSTALLATION.)
3. Remove in the order indicated in the table.
4. Install in the reverse order of removal.

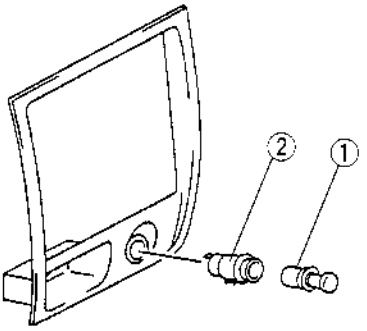

X5U920WAV

1	Cigarette lighter plug
2	Socket ☞ Removal Note

Socket Removal Note

1. Pry up the stopper with the tape-wrapped flathead screwdriver.
2. Pull the socket while prying up the stopper.

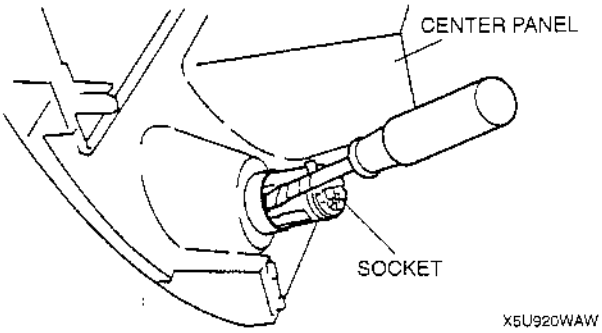

X5U920WAW

CIGARETTE LIGHTER INSPECTION

X5U920W21

Note

- Verify that the cigarette lighter plug will move normally within **20—30 seconds**, after pressing the plug into the socket. If the fuse does not move, perform the following procedures.

1. Remove the socket. (Refer to 09–20 CIGARETTE LIGHTER REMOVAL/INSTALLATION.)
2. Verify the bimetals in the socket are not warped.
3. Inspect if the backs of the bimetals can be seen from the inside or outside.

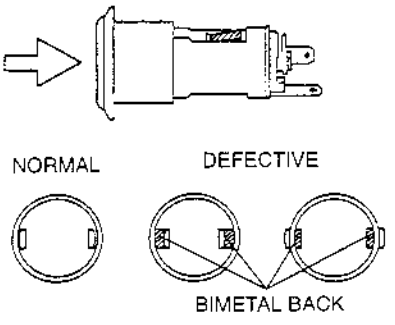

X5U920WAU

4. If the back of the bimetal can be seen from the inside, replace the socket.
5. If the fuse has been burnt, replace the socket.
6. If the bimetal and the socket are normal, replace the cigarette lighter plug.

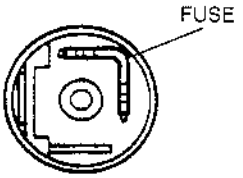

X5U920WAX

09–21 POWER SYSTEMS

FUSE SERVICE CAUTION

X5U921W01

Caution

- **Determine and correct the cause of the burnt fuse before replacing it. If the fuse is replaced before doing this, it may burn again.**

MAIN FUSE REMOVAL/INSTALLATION

X5U921W02

1. Disconnect the negative battery cable.
2. Remove in the order indicated in the table.
3. Install in the reverse order of removal.

1	Main fuse block cover
2	Nut
3	Bolt
4	Main fuse

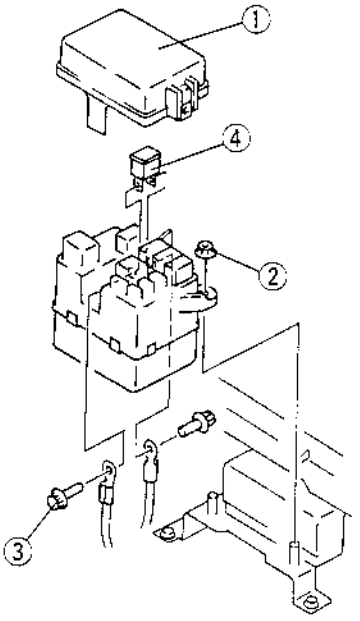

X5U921WA0

ROOM FUSE INSTALLATION

X5U921W03

Note

- When the ROOM fuse is burnt or removed, the malfunction indicator lamp illuminates. If the ROOM fuse is replaced or installed with the ignition switch at ON, the malfunction indicator lamp will continue to illuminate.

1. Turn the ignition switch to LOCK.
2. Install the ROOM fuse.

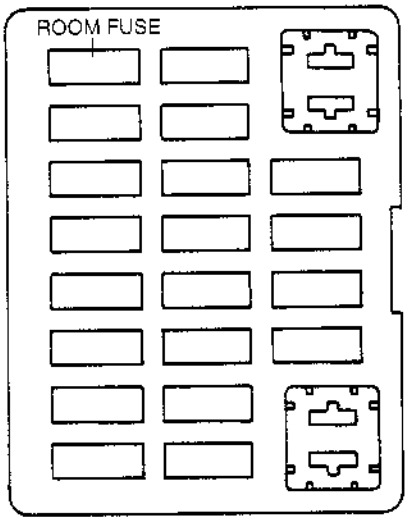

X5U921WA1

IGNITION SWITCH REMOVAL/INSTALLATION

X5U921W04

1. Disconnect the negative battery cable.
2. Remove the column cover. (Refer to 09–17 COLUMN COVER REMOVAL/INSTALLATION.)
3. Remove in the order indicated in the table.
4. Install in the reverse order of removal.

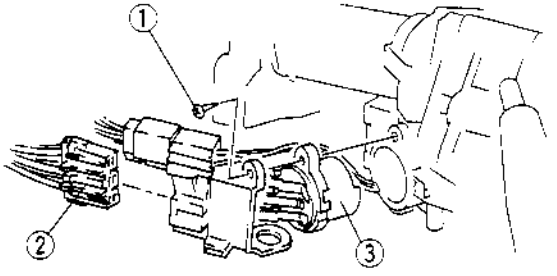

X5U921WA2

1	Screw
2	Ignition switch connector
3	Ignition switch

IGNITION SWITCH INSPECTION

X5U921W05

1. Remove the column cover. (Refer to 09–17 COLUMN COVER REMOVAL/INSTALLATION.)
2. Disconnect the ignition switch connector.
3. Inspect for continuity between the ignition switch terminals by using an ohmmeter.

○—○ : Continuity

Key position	Terminal					
	A	B	C	D	E	F
LOCK						
ACC			○			○
ON	○	○	○	○		○
START		○	○	○	○	

X5U921WA3

4. If not as specified, replace the ignition switch.

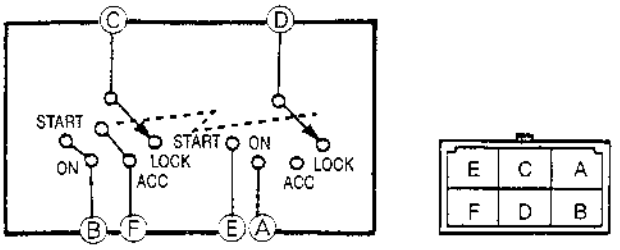

X5U921WA4

KEY REMINDER SWITCH INSPECTION

1. Remove the column cover. (Refer to 09–17 COLUMN COVER REMOVAL/INSTALLATION.)
2. Disconnect the key reminder switch connector.

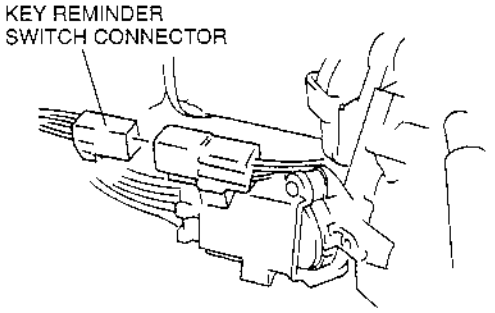

X5U921WA5

3. Inspect for continuity between the key reminder switch terminals by using an ohmmeter.

○—○ : Continuity

Key condition	Terminal	
	A	B
Key inserted	○	○
Key removed		

X5U921WA6

X5U921W06

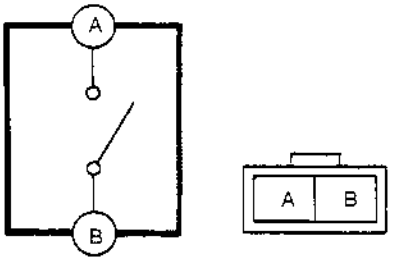

X5U921WA7

4. If not as specified, replace the steering lock. (Refer to 06–10 STEERING WHEEL AND COLUMN REMOVAL/INSTALLATION.)

09–22 INSTRUMENTION/DRIVER INFO.

INSTRUMENT CLUSTER REMOVAL/INSTALLATION

X5U922W01

1. Disconnect the negative battery cable.
2. Remove the meter hood. (Refer to 09–17 METER HOOD REMOVAL/INSTALLATION.)
3. Remove in the order indicated in the table.
4. Install in the reverse order of removal.

1	Screw
2	Instrument cluster connector
3	Instrument cluster

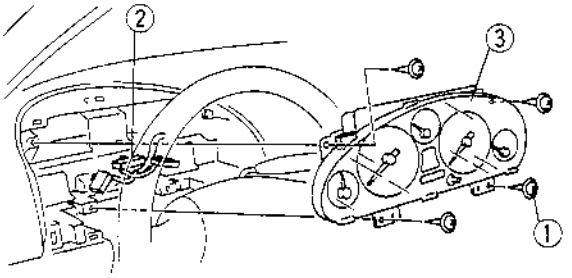

X5U922WA0

INSTRUMENT CLUSTER DISASSEMBLY/ASSEMBLY

X5U922W02

Caution

- **If the instrument cluster is dropped or damaged, the system will not operate properly and it may become the cause of trouble or malfunction.**

1. Disassemble in the order indicated in the table.
2. Assemble in the reverse order of disassembly.

1	Front glass
2	Window plate
3	Screw
4	Bulb
5	Print plate
6	Tachometer
7	Speedometer
8	Fuel gauge
9	Water temperature gauge
10	Oil pressure gauge
11	Odometer/tripmeter
12	Warning plate
13	Case

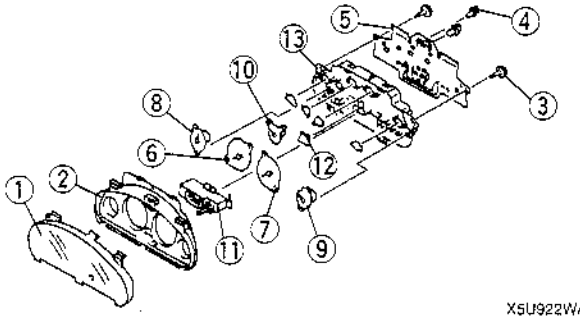

X5U922WA1

INSTRUMENT CLUSTER INSPECTION

Speedometer

1. Remove the speedometer. (Refer to 09–22 INSTRUMENT CLUSTER DISASSEMBLY/ASSEMBLY.)
2. Measure the resistance between the speedometer terminals by using an ohmmeter.

O-W-O : Resistance

Step	Terminal			
	A	B	C	D
1	O—W—O			: R
2			O—W—O	: R

R: 136—184 Ω

X5U922WA2

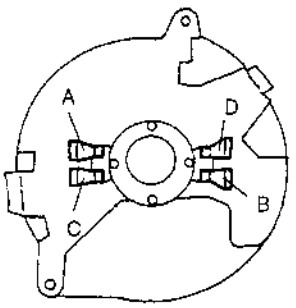

X5U922WA3

3. If not as specified, replace the speedometer. (Refer to 09–22 INSTRUMENT CLUSTER DISASSEMBLY/ASSEMBLY.)

Tachometer

1. Remove the tachometer. (Refer to 09–22 INSTRUMENT CLUSTER DISASSEMBLY/ASSEMBLY.)
2. Measure the resistance between the tachometer terminals by using an ohmmeter.

O-W-O : Resistance

Step	Terminal			
	A	B	C	D
1	O—W—O			: R
2			O—W—O	: R

R: 136—184 Ω

X5U922WA4

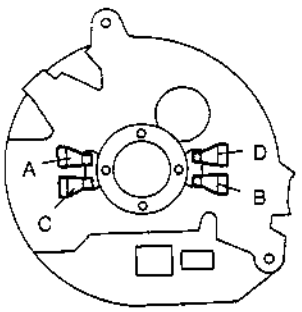

X5U922WA5

3. If not as specified, replace the tachometer. (Refer to 09–22 INSTRUMENT CLUSTER DISASSEMBLY/ASSEMBLY.)

X5U922W03

Fuel Gauge

1. Remove the fuel gauge. (Refer to 09–22 INSTRUMENT CLUSTER DISASSEMBLY/ASSEMBLY.)
2. Measure the resistance between the fuel gauge terminals by using an ohmmeter.

O-W-O : Resistance

Step	Terminal		
	A	B	C
1	O—W—O		: R_1
2		O—W—O	: R_2
3	O—W—O		: R_3

R_1: 110.7—135.3 Ω R_2: 89.1—108.9 Ω
R_3: 199.8—244.2 Ω

X5U922WA6

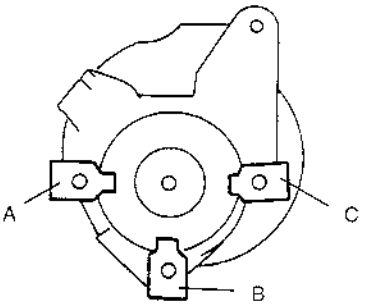

X5U922WA7

3. If not as specified, replace the fuel gauge. (Refer to 09–22 INSTRUMENT CLUSTER DISASSEMBLY/ASSEMBLY.)

Water Temperature Gauge

1. Remove the water temperature gauge. (Refer to 09–22 INSTRUMENT CLUSTER DISASSEMBLY/ASSEMBLY.)
2. Measure the resistance between the water temperature gauge terminals by using an ohmmeter.

O-W-O : Resistance

Step	Terminal		
	A	B	C
1	O—W—O		: R_1
2		O—W—O	: R_2
3	O—W—O		: R_3

R_1: 85.5—94.5 Ω R_2: 247.5—302.5 Ω
R_3: 193.5—236.5 Ω

X5U922WA8

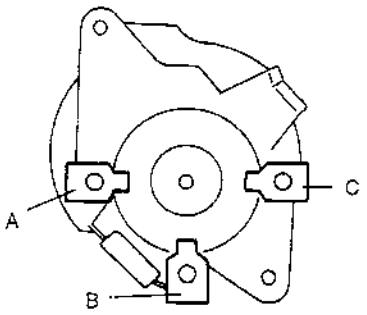

X5U922WA9

3. If not as specified, replace the water temperature gauge. (Refer to 09–22 INSTRUMENT CLUSTER DISASSEMBLY/ASSEMBLY.)

Oil Pressure Gauge

1. Remove the oil pressure gauge. (Refer to 09–22 INSTRUMENT CLUSTER DISASSEMBLY/ASSEMBLY.)
2. Measure the resistance between the oil pressure gauge terminals by using an ohmmeter.

○⁄⁄⁄○ : Resistance

Step	Terminal		
	A	B	C
1	○—⁄⁄⁄—○		:R_1
2		○—⁄⁄⁄—○	: R_2
3	○—⁄⁄⁄—○		: R_3

R_1: 89.1—108.9 Ω R_2: 228.6—279.4 Ω
R_3: 139.5—170.5 Ω

X5U922WAA

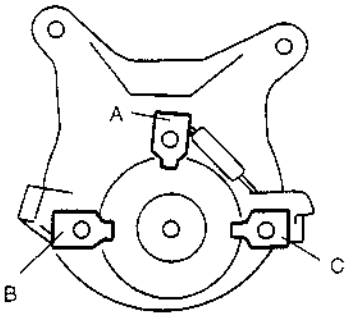

X5U922WAB

3. If not as specified, replace the oil pressure gauge. (Refer to 09–22 INSTRUMENT CLUSTER DISASSEMBLY/ASSEMBLY.)

INSTRUMENT CLUSTER INPUT/OUTPUT CHECK MODE

X5U922W09

Note
- In this mode, it is possible to check the item in the following chart.

Diagnostic Trouble Code Chart

DTC	Checking item
00	Transmission range switch
01	Seat belt switch
04	Door switch
08	TNS relay
14	Buzzer
31	Key reminder switch

Note
- Diagnostic trouble code which are not listed may be indicated, but they cannot be inspected.

Operating Order

Note
- Connect the negative battery cable after **30 seconds or more** have passed after disconnecting the cable, then operate the input/output check mode again after terminating the input/output check mode.

1. Close the all doors.
2. Disconnect the negative battery cable.
3. Open the driver's side door.
4. Connect the negative battery cable.
5. Perform the following procedures within **30 seconds**, after connecting the negative battery cable.
   (1) Turn the ignition switch to ON.
   (2) Push the door switch 3 times.
   (3) Push the odometer/tripmeter switch 3 times.

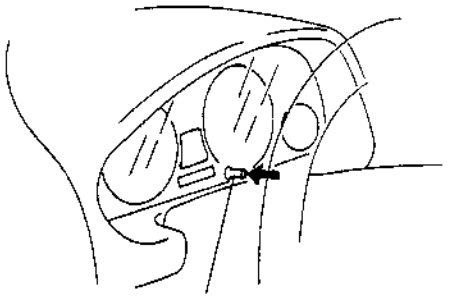

ODOMETER/TRIPMETER SWITCH X5U922WAH

Checking Order

Note
- The diagnostic trouble codes are displayed in numerical order. (While performing the inspection, if you want to inspect a diagnostic trouble code of which the number is smaller that the code number you are currently inspecting, terminate the check mode then repeat the inspection from the beginning.)
- If rotate the wheels, cancel the input/output check mode.

Check Code 00—14

Note
- The diagnostic trouble codes can be fast forward by pushing and holding the odometer/tripmeter switch for **1 second or more**.

1. Push the odometer/tripmeter switch and select the diagnostic trouble code.
2. Inspect each diagnostic trouble code by following the related inspection procedures. (Refer to Inspection of Diagnostic Trouble Codes.)

Check Code 31

1. Turn the ignition switch to ACC.
2. Push the odometer/tripmeter switch and select the diagnostic trouble code.
3. Inspect each diagnostic trouble code by following the related inspection procedures. (Refer to Inspection of Diagnostic Trouble Codes.)

Cancel Order

- Cancel the input/output check mode by turning the ignition switch to LOCK then back to ON.

Note
- Cancel the input/output check mode by leaving the instrument cluster in check mode for **approximately 45 minutes**.

Inspection of Diagnostic Trouble Codes

DTC 00	Transmission range switch (R range) signal		
STEP	INSPECTION	INDICATION	ACTION
1	Set the selector lever to R range.	on X5U922WAJ	Go to next step.
		off X5U922WAK	• Check the transmission range switch. • Check the wiring harness. (Battery — transmission range switch — instrument cluster)
2	Set the selector lever to another range except R range.	on X5U922WAL	• Check the transmission range switch. • Check the wiring harness. (Battery — transmission range switch — instrument cluster)
		off X5U922WAM	Input signal to instrument cluster is okay.

DTC 01	Seat belt switch on/off signal		
STEP	INSPECTION	INDICATION	ACTION
1	Pull the driver's side seat belt.	on X5U922WAN	• Check the seat belt switch. • Check the wiring harness. (Instrument cluster — seat belt switch)
		off X5U922WAP	Go to next step.
2	Release the driver's side seat belt.	on X5U922WAQ	Input signal to instrument cluster is okay.
		off X5U922WAR	• Check the seat belt switch. • Check the wiring harness. (Instrument cluster — seat belt switch)

DTC 04	Door switch on/off signal		
STEP	INSPECTION	INDICATION	ACTION
1	Open the driver's side door.	on X5U922WAS	Close the driver's side door, then go to next step.
		off X5U922WAT	• Check the door switch. • Check the wiring harness. (Instrument cluster — door switch)
2	Open the passenger's side door.	on X5U922WAU	Close the passenger's side door, then go to next step.
		off X5U922WAV	• Check the door switch. • Check the wiring harness. (Instrument cluster — door switch)
3	Close all doors.	on X5U922WAW	• Check the door switch. • Check the wiring harness. (Instrument cluster — door switch)
		off X5U922WAX	Input signal to instrument cluster is okay.

DTC 08	TNS relay on/off signal		
STEP	INSPECTION	INDICATION	ACTION
1	Turn the headlight switch to TNS position.	on X5U922WAY	Go to next step.
		off X5U922WAZ	• Check the TNS relay. • Check the wiring harness. (Battery — TNS relay — instrument cluster)
2	Turn the headlight switch to OFF.	on X5U922WB0	• Check the TNS relay. • Check the wiring harness. (Battery — TNS relay — instrument cluster)
		off X5U922WB1	Input signal to instrument cluster is okay.

DTC 14	Operation signal to buzzer		
INSPECTION	INDICATION	SITUATION	ACTION
Wait for **2 seconds** after selecting DTC 14.	(No indication)	Buzzer continuously sounds.	Buzzer is okay.
		Buzzer does not continuously sound.	Replace the odometer/tripmeter.

DTC 31	Key reminder switch on/off signal		
STEP	INSPECTION	INDICATION	ACTION
1	Insert the key into steering lock.	on X5U922WB2	Go to next step.
		off X5U922WB3	• Check the key reminder switch. • Check the wiring harness. (Battery — key reminder switch — instrument cluster)
2	Remove the key from steering lock.	on X5U922WB4	• Check the key reminder switch. • Check the wiring harness. (Battery — key reminder switch — instrument cluster)
		off X5U922WB5	Input signal to instrument cluster is okay.

WARNING AND INDICATOR LIGHT BULB REMOVAL/INSTALLATION

1. Disconnect the negative battery cable.
2. Remove the instrument cluster. (Refer to 09–22 INSTRUMENT CLUSTER REMOVAL/INSTALLATION.)
3. Turn the socket counterclockwise to remove the bulb as shown in the figure.

X5U922W04

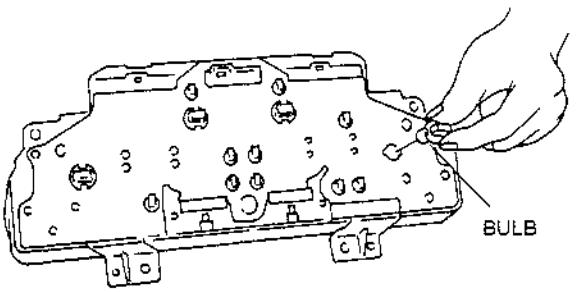

X5U922WAC

4. Install in the reverse order of removal.

FUEL GAUGE SENDER UNIT INSPECTION

X5U922W05

1. Remove the fuel pump. (Refer to 01–14 FUEL PUMP REMOVAL/INSTALLATION.)
2. Using an ohmmeter, measure and verify the resistance between the fuel gauge sender unit terminals as shown in the following chart while slowly moving the unit arm from empty to full.

Measuring point	Resistance (Ω)
Full	6.4—7.6
1/2	31.8—33.2
Empty	93—97

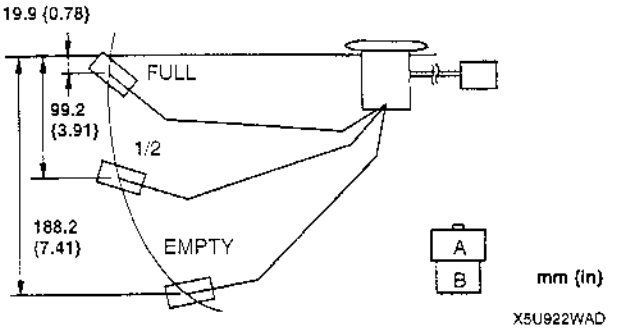

X5U922WAD

3. If not as specified, replace the fuel gauge sender unit. (Refer to 01–14 FUEL PUMP REMOVAL/INSTALLATION.)

OIL PRESSURE SWITCH INSPECTION

X5U922W06

1. Verify that the oil pressure gauge needle moves to H when the engine is started.
2. Verify that the oil pressure gauge needle moves to L when the engine is stopped.
3. If the oil pressure gauge needle does not move, inspect the oil pressure gauge and related wiring harness.
4. If the oil pressure gauge and related wiring harness are normal, inspect the oil pressure. (Refer to 01–11 OIL PRESSURE INSPECTION.)
5. If the oil pressure is normal, replace the oil pressure switch. (Refer to 01–11 OIL PRESSURE INSPECTION.)

HORN REMOVAL/INSTALLATION

X5U922W07

1. Disconnect the negative battery cable.
2. Remove the upper seal board.
3. Disconnect the horn connector.
4. Remove the bolt.
5. Remove the horn.

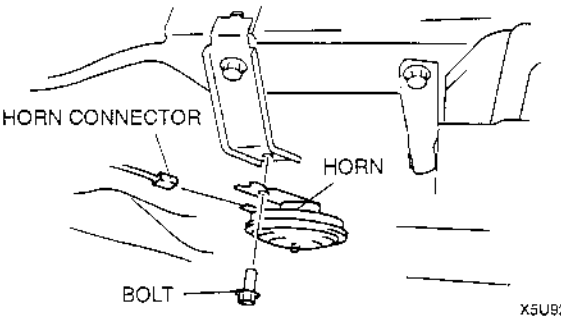

X5U922WAE

6. Install in the reverse order of removal.

HORN RELAY INSPECTION

X5U922W08

1. Remove the horn relay.
2. Inspect for continuity between the horn relay terminals by using an ohmmeter.

○—○ : Continuity

Step	Terminal			
	B	D	A	C
1	○	○		
2	B+	GND	○	○

X5U922WAF

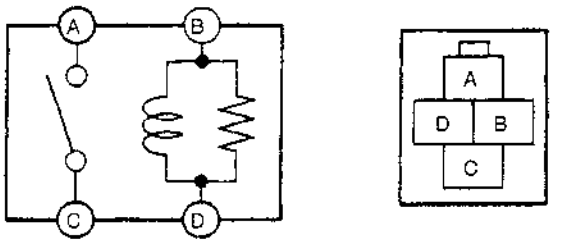

X5U922WAG

3. If not as specified, replace the horn relay.

09–50 TECHNICAL DATA

09 BODY & ACCESSORIES

X5U95CW01

Item		Specification
LIGHTING SYSTEMS		
Exterior light bulb capacity (W)	Headlight	60/55
	Front turn light/parking light	27/8
	Front side marker light	3.8
	Rear turn light	21
	Brake light/taillight	21/5
	Back-up light	21
	High-mount brake light	21
	License plate light	5
Interior light bulb capacity (W)	Interior light	8
	Instrument cluster illumination	3.4, 1.4
INSTRUMENTATION/DRIVER INFO.		
Warning and indicator light bulb capacity (W)	ABS warning light	1.4
	Air bag system warning light	1.4
	Brake system warning light	1.4
	Cruise set indicator light	1.4
	Generator warning light	1.4
	High beam indicator light	1.4
	HOLD indicator light	1.4
	Malfunction indicator lamp	1.4
	O/D OFF indicator light	1.4
	Seat belt warning light	1.4
	Turn indicator light	1.4

09–60 SERVICE TOOLS

09 BODY & ACCESSORIES SST

X5U960W01

49 0305 870A Window Tool Set 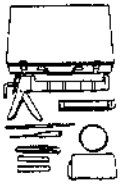 T0305870A	49 G050 1A0 Sealant Remover  TG0501A0X	49 UN01 050 Removing tool  TUN01050X

ALPHABETICAL INDEX

AI SECTION

A

B

C

D

E

F

G

H

I

J

K

L

M

N

O

P

Q

R

S

T

U

V

W